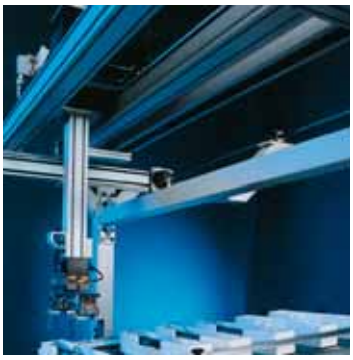

aerospace
climate control
electromechanical
filtration
fluid & gas handling
hydraulics
pneumatics
process control
sealing & shielding

Fluid Power Seal Design Guide

Catalog EPS 5370

Parker

ENGINEERING YOUR SUCCESS.

WARNING:

Failure, improper selection or improper use of the products and/or systems described herein or related items can cause death, personal injury or property damage.

For safe and trouble-free use of these products, it is important that you read and follow the Parker Seal Group Product Safety Guide. This Safety Guide can be referenced and downloaded free of charge at www.parkerseals.com and can be ordered, without charge, as Parker Publication No. PSG 5004 by calling 1-800-C-PARKER.

This document, along with other information from Parker Hannifin Corporation, its subsidiaries and authorized distributors, provides product and/or system options for further investigation by users having technical expertise. It is important that you analyze all aspects of your application and review the information concerning the product or system in the current product catalog. Due to the variety of operating conditions and applications for these products or systems, the user, through his or her own analysis and testing, is solely responsible for making the final selection of the products and systems and assuring that all performance, safety and warning requirements of the application are met. The products described herein, including without limitation, product features, specifications, designs, availability and pricing, are subject to change by Parker Hannifin Corporation and its subsidiaries at any time without notice.

OFFER OF SALE

The items described in this document are hereby offered for sale by Parker Hannifin Corporation, its subsidiaries and its authorized distributors. This offer and its acceptance are governed by the provisions stated on the separate page of this document entitled “Offer of Sale.”

© 2007 Parker Hannifin Corporation. All rights reserved.

Fluid Power Seal Design Guide Table of Contents

Introduction 1

Engineering 2

Materials 3

Fluid Power Applications 4

Rod Seals 5

Symmetrical Seals 6

Piston Seals 7

Wipers 8

Wear Rings / Bearings 9

Back-ups 10

Urethane O-Rings / Head Seals 11

See Appendices A through G for:

A Design Action Request Form
B English / Metric Conversions
C Custom Groove Calculations
D Chemical Compatibility
E ASTM D2000 Compatibility
F ISO Gland Tolerances
G Other Parker EPS Products

Parker Hannifin Corporation
Engineered Polymer Systems Division
Phone: 801 972 3000
Fax: 801 973 4019

www.parkerseals.com

Introduction

Parker Hannifin is the industry leader for sealing system solutions for the fluid power industry.

Parker EPS Division provides the most complete selection of dynamic seals for both OEM and MRO hydraulic and pneumatic applications. Our expertise and complete product offering means Parker is your one source manufacturer and sealing solution partner. Our innovative technology and value added services allow us to engineer your success with leading edge material development, experienced design, high quality manufacturing, and outstanding customer service.

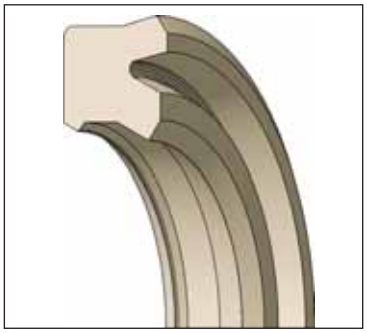

Rod Seals

Rod Seals, which guard against external leakage, are one of the most vital components of the sealing system. In recognition of their critical nature, Parker is pleased to offer the most complete range of materials and profiles in the industry. Our advanced plastic, rubber and PTFE material development delivers the highest performance in a wide variety of rod seal applications. Cutting edge technologies include multiple sealing lip systems, shock-load resistance, low friction and ultra-dry capability.

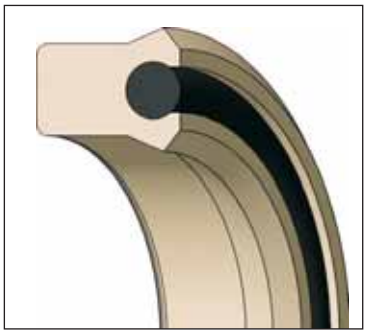

Symmetrical Seals

With thousands of available size and material combinations, Parker symmetrical profiles are designed to act as either rod or piston seals, allowing one part number to function in two applications. Often copied but never equaled, the PolyPak™ for hydraulic applications and the 8400 u-cup for pneumatic applications have revolutionized the fluid power industry and become trusted standards. Symmetrical u-cups and squeeze seals are available in a variety of lip shapes and materials.

Piston Seals

Our diverse product line of piston seal profiles suits a broad range of hydraulic and pneumatic applications. Whatever the need, from low pneumatic pressures to extreme hydraulic shock loading, Parker has the solution. Profiles are available to meet the demands of uni-directional and bi-directional pressure, low friction, easy installation, port passing, and zero-drift scenarios.

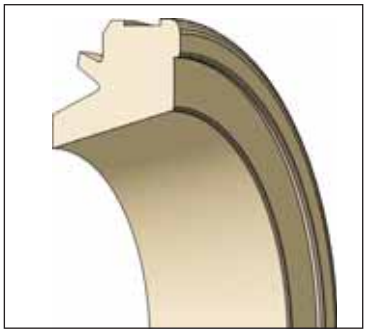

Wipers

Just as rod seals are designed to keep fluid in, Parker wipers perform to keep contamination out. Wipers work in conjunction with rod seals to form the first line of defense in protecting a system and keeping it free from dirt, mud, water, and other contaminants. Incorporating the latest technology in aggressive wiping lips and OD exclusion, Parker has solutions in press-in, snap-in, and double lip profiles.

Parker Hannifin Corporation
Engineered Polymer Systems Division
Phone: 801 972 3000

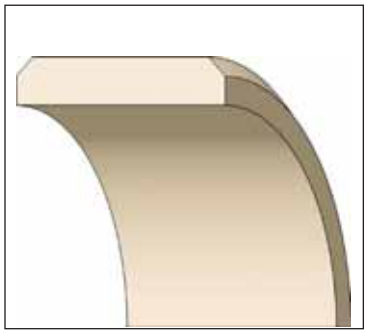

Wear Rings and Bearings

Parker offers a complete line of wear rings and bearing products to fit any application. The product offering meets the full spectrum of needs, from heavy duty hydraulic cylinders operating under the highest temperatures and pressures to pneumatic applications requiring low friction, long life and self-lubrication. No matter what the application demands, Parker's diverse bearing product line ensures that performance requirements are met with maximized value.

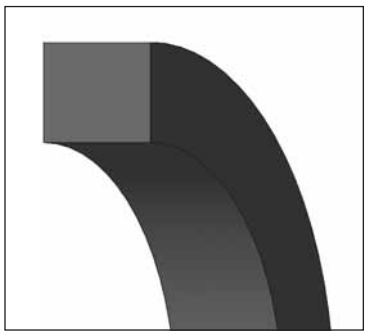

Back-up Rings

Parker back-up rings offer simple solutions to safely increase system pressure or solve an existing seal extrusion problem. Standard profiles are available in a variety of materials to complement virtually any Parker rod or piston profile.

O-rings & Head Seals

Parker is pleased to offer the material advantages of the Resilon™ family of urethanes in standard and custom o-ring sizes. With high temperature Resilon o-rings, the need for back-ups can be eliminated, simplifying installation and reducing damage due to spiral failure. Static head seals are ideal for replacing o-rings and back-ups in hydraulic cylinder heads, fool-proofing installation and eliminating failures due to back-up pinching and blow-out.

Parker Hannifin Corporation
Engineered Polymer Systems Division
Phone: 801 972 3000

Rod Seals (See Section 5)

Profile		Description	Application (Duty)				Page
			Hydraulic			Pneumatic	
			Light	Medium	Heavy		
BD		Premium non-symmetrical o-ring energized rod seal with a knife trimmed primary lip and molded secondary lip. Standard materials are 4300, 4700, 5065. Available with positively actuated back-up.	✓	✓	✓		5-5
BT		Premium non-symmetrical u-cup rod seal with a knife trimmed primary lip and molded secondary lip. Standard material is 4300 family.	✓	✓	✓		5-7
BS		Non-symmetrical u-cup rod seal with knife trimmed primary lip and molded secondary lip. Standard materials are 4300 family, 4700, 5065.	✓	✓	✓		5-9
B3		Non-symmetrical u-cup with knife trimmed lip. Standard materials include 4300, 4700, 5065.	✓	✓			5-11
UR		Standard non-symmetrical u-cup with trimmed lip. Standard material is 4615.	✓	✓			5-13
E5		Non-symmetrical low friction rounded lip pneumatic rod seal. Standard materials include 4274, 4180, 4208, 5065.	✓			✓	5-21
TR		Bi-directional rod “T-seal” available in no back-up, single back-up, and two back-up groove sizes. Standard energizer materials include 4111, 4274, 4205, 4259. Back-ups available in PTFE, Nylon, PEEK.	✓	✓	✓	✓	5-24
ON		Bi-directional, rubber energized PTFE rod cap seal. Full range of energizer and PTFE materials available.	✓	✓			5-28
CR		Bi-directional, low profile, rubber energized PTFE cap rod seal designed to fit standard o-ring glands. Full range of energizer and PTFE materials available.	✓	✓		✓	5-32
OC		Standard bi-directional rubber energized PTFE rectangular cap rod seal. Full range of energizer and PTFE materials available.	✓	✓		✓	5-39
BR		Premium knife trimmed buffer or secondary seal designed to work with a primary rod seal for heavy duty or zero-leak systems. Standard material is 4300.		✓	✓		5-45
OD		Uni-directional rubber energized PTFE rod seal, typically used as a buffer or secondary rod seal. Full range of energizer and PTFE materials available.	✓	✓	✓		5-48
V6		Pneumatic cushion or check valve rod seal used to cushion the piston using internal pressure. Standard materials include 4622, 4180, 4181, 4208.	✓			✓	5-54
OR		Bi-directional rubber energized PTFE rod seal used in rotary or oscillating applications. Full rante of energizer and PTFE materials available.	✓	✓		✓	5-57

09/01/07

Parker Hannifin Corporation
Engineered Polymer Systems Division
Phone: 801 972 3000

Symmetrical Seals for Rod or Piston Applications (See Section 6)

Profile		Description	Application (Duty)				Page
			Hydraulic			Pneumatic	
			Light	Medium	Heavy		
SPP		Standard PolyPak. A square shaped symmetrical squeeze seal with a knife trimmed scraper lip. Standard materials include 4615, 4622, 4651, 4263, 4207, 4266.	✓	✓	✓		6-6
DPP		Deep PolyPak. A rectangular shaped symmetrical squeeze seal with a knife trimmed scraper lip. Standard materials include 4615, 4622, 4651, 4263, 4207, 4266.	✓	✓	✓		6-8
BPP		Type B PolyPak. A rectangular shaped symmetrical squeeze seal with a knife trimmed beveled lip. Standard materials include 4615, 4622, 4651, 4263, 4207, 4266.	✓	✓	✓		6-10
SL		A dual lip seal created by the combination of a standard PolyPak square shell and a rubber lip seal/energizer. Standard materials are a 4615 shell and 4180 lip seal/energizer. Also known as SCL-Pak.	✓	✓	✓		6-39
US		Standard symmetrical u-cup with trimmed beveled lips. Standard material is 4615.	✓	✓			6-42
8400 8500		Symmetrical rubber u-cups used primarily in pneumatic applications. 8400 series feature knife trimmed with a beveled lip. 8500 series feature a scraper lip. Standard materials include 4180, 4274, 4208.	✓	✓		✓	6-49
AN 6226		Industry standard symmetrical u-cups per the old Army Navy (AN) specification. Standard material is 4295.	✓			✓	6-55
SPI- RAL VEE		Spiral v-packing rings typically sold in sets, also known as chevron packing. Made from a wide range of materials, v-packing may be cut to size, machined, or net molded. Most dynamic v-packing has been replaced with PolyPak seals or u-cups.		✓	✓		6-59

Piston Seals (See Section 7)

BP		Premium bi-directional rubber energized urethane piston cap seal. Standard material is 4304.		✓	✓		7-5
PSP		Standard bi-directional rubber energized urethane piston cap seal. Standard materials include 4300, 4622.	✓	✓			7-8
CC		ChemCast is a heavy duty bi-directional rubber energized hard plastic, step-cut piston cap seal.			✓		7-11
OK		Bi-directional rubber energized nylon step-cut piston cap seal.			✓		7-13
PIP		Bi-directional piston seal created by the combination of a Pressure Inverting Pedestal (PIP) back-up ring and Type B PolyPak. Standard material is a 4615 PolyPak with a 4617 PIP ring.		✓	✓		7-15

09/01/07

Parker Hannifin Corporation
Engineered Polymer Systems Division
Phone: 801 972 3000
www.parkerseals.com

Piston Seals (See Section 7)

Profile		Description	Application (Duty)				Page
			Hydraulic			Pneumatic	
			Light	Medium	Heavy		
B7		Premium non-symmetrical u-cup with knife trimmed lip piston seal. Standard materials include 4300, 4700, 5065.					7-19
UP		Standard non-symmetrical u-cup with trimmed beveled lip piston seal. Standard material is 4615.					7-23
E4		Non-symmetrical low friction rounded lip pneumatic piston seal. Standard materials include 4274, 4180, 4208, 5065.					7-26
BMP		Low friction bumper and round lip seal profile for use in pneumatic applications. Standard materials include 4274 and 4208.					7-29
TP		Bi-directional piston “T-seal” available in no back-up, single back-up, and two back-up grooves. Standard energizer materials include 4111, 4274, 4205, 4259. Back-ups available in PTFE, Nylon, PEEK.					7-31
S5		Economical medium duty bi-directional o-ring energized PTFE piston seal. Standard material is 15% fiberglass-filled PTFE with nitrile energizer. Split option available.					7-35
R5		Medium to heavy duty bi-directional lathe cut energized PTFE piston seal. Full range of energizer and PTFE materials available. Split option available.					7-39
CT		Four piece capped “T-seal” piston seal made from molded rubber energizer, PTFE cap, and Nylatron back-ups.					7-43
CQ		Bi-directional three piece lathe cut energized PTFE cap piston seal with an integrated quad seal for zero drift. Also available with dual o-ring energizer.					7-48
OE		Bi-directional, rubber energized PTFE piston cap seal. Full range of energizer and PTFE materials available.					7-53
CP		Bi-directional low profile, rubber energized PTFE cap piston seal designed to fit standard o-ring glands. Full range of energizer and PTFE materials available.					7-62
OA		Standard bi-directional rubber energized PTFE rectangular cap piston seal. Full range of energizer and PTFE materials available.					7-68
OQ		Bi-directional rubber energized PTFE piston seal used in rotary or oscillating applications. Full range of energizer and PTFE materials available.					7-74

Parker Hannifin Corporation
Engineered Polymer Systems Division
Phone: 801 972 3000

Wipers (See Section 8)

Profile		Description	Application (Duty)				Page
			Hydraulic			Pneumatic	
			Light	Medium	Heavy		
YD		Premium snap-in wiper with OD exclusion lip and a knife trimmed wiping lip. Standard material is 4300.					8-5
SHD		Slotted heel snap-in wiper for pneumatics and light to medium duty hydraulics. Standard materials are 4615, 5065, 4263, 4208, 4207.					8-6
SHX		Slotted heel snap-in wiper with OD exclusion feature. Designed to upgrade SHD wipers without changing the groove. Standard materials are 4615, 5065.					8-7
SH959		An industry standard slotted heel Army Navy (AN) wiper designed to fit MS-28776 (MS-33675) grooves. Standard materials are 4615, 5065, 4263, 4208, 4207.					8-11
SX959		An industry standard slotted heel Army Navy (AN) wiper with an OD exclusion feature designed to fit MS-28776 (MS-33675) grooves. Designed to upgrade SH959 wipers without changing the groove. Standard materials are 4615, 5065, 4263, 4208, 4207.					8-12
AH		Double-lip, press in place, metal canned wiper with knife trimmed sealing lip for heavy duty hydraulics. Standard materials are 4300, 4700, 4615.					8-15
J		Standard single-lip, press in place, metal canned wiper with a knife trimmed lip for medium and heavy duty hydraulics. Standard materials are 4300, 4700, 4615.					8-17
AY		Premium snap-in place double-lip wiper for hydraulic applications. Standard materials are 4300, 4301, 4700.					8-19
H / 8600		Standard snap-in place double-lip wiper. Standard materials for H wiper are 4615, 5065. Standard material for 8600 wiper is 4181.					8-21
K		Light load snap-in wiper with double-lip designed for low friction, light load applications. Standard material is 4615.					8-27
AD		Double acting, double-lip, rubber energized PTFE wiper. Full range of energizer and PTFE materials available.					8-30
SG		Metal scraper with rubber energizer for excluding abrasive contaminants.					8-36

Parker Hannifin Corporation
Engineered Polymer Systems Division
Phone: 801 972 3000

Wear Rings / Bearings (See Section 9)

Profile		Description	Application (Duty)				Page
			Hydraulic				
			Light	Medium	Heavy	Pneumatic	
WPT		Tight tolerance piston wear ring with chamfered corners. Standard material is 4733 WearGard™.					9-7
WRT		Tight tolerance rod wear ring with chamfered corners. Standard material is 4733 WearGard.					9-11
WN		Standard commercial wear ring for rod and piston applications. . Standard material is 4650 MolyGard™.					9-14
PDT		PTFE wear strip/bearing available cut to length or in bulk rolls. A variety of PTFE compounds are available.					9-18
PDW		Precision cut wear ring/bearing machined from PTFE billet material. Rod and piston chamfer may apply.					9-27

Back-ups (See Section 10)

MB		Heavy cross-section modular back-up for PolyPak seals. Standard materials are 4617, 4652.					10-4
8700		Light cross-section back-up for PolyPak and u-cup seals. Standard materials are 4651, 4729.					10-10
5100		Back-up rings designed for o-ring grooves. Standard materials are 4651, 4729.					10-13
PAB		Positively actuated back-up ring incorporated into common seal profiles to extend a seal's pressure range. Sold as an assembly with the seal.					10-21
PDB		Anti-extrusion PTFE ring offered in solid and split configurations. Full PTFE material range applies.					10-22

Urethane O-Rings & Head Seals (See Section 11)

568		High performance urethane o-ring made from the Resilon™ family of high temperature, low compression set urethanes.					11-2
HS		Static head seals designed to replace o-rings and back-up in static applications. Standard material is 4700.					11-15

Parker Hannifin Corporation
Engineered Polymer Systems Division
Phone: 801 972 3000

General Application Guidelines

Parker's selection of products is the broadest offering in the industry for hydraulic and pneumatic sealing systems. Table 1-1 provides "General Application Guidelines" to help define possible differences between light, medium and heavy duty applications. The product profile charts beginning on page 1-4 show corresponding application duty recommendations for each profile.

Table 1-1. General application guidelines.

Application Parameter	Hydraulic			Pneumatic	
	Light Duty	Medium Duty	Heavy Duty	Light Duty	Heavy Duty
Pressure Range	<1200 psi (<83 bars)	<3500 psi (<241 bars)	>3500 psi (>241 bars)	1 to 200 psi (0 to 14 bar)	Above 200 psi (Above 14 bars)
Pressure Spikes	None or low	Not to exceed twice the system pressure. Short duration such as valve shifting.	Pressure spikes that may be several times the system pressure and of a longer duration. These are often mechanically induced by forcing the rod in or out.	Because of the compressive nature of gases pressure spikes are typically not a problem.	Because of the compressive nature of gases pressure spikes are typically not a problem.
Temperature Range	0°F to 160°F (-18°C to 71°C)	-20°F to 200°F (-29°C to 93°C)	-45°F to 225°F (-43°C TO 107°C)	0°F to 72°F (-18°C to 22°)	Cryogenic to 450°F (232°C)
Contamin-ation	Low or non existing	Moderate with cylinder in horizontal or inverted position.	Moderate to high with the cylinder upright - vertical	Low or non existing	Moderate to high with the cylinder upright - vertical
Side Loading	None to light with shorter stroke and vertical cylinder mount.	Moderate side load with cylinder mounted towards the vertical position. Medium stroke.	Longer stroke lengths. Cylinder mounted horizontal, heavy side loading.	None to light with shorter stroke and cylinder mount vertical.	Longer stroke lengths. Cylinder mounted horizontal, heavy side loading.

It is not uncommon for the requirements of a sealing system to fall into multiple duty columns. When this situation occurs you should select the majority of your components from the lesser duty range.

When selecting a wiper, focus on contamination section.

In selecting a sealing component you will evaluate the temperature, pressure and pressure spike variables of the application. With a wear ring, you will want to look at the temperature and side loading section. This does not preclude the need to consider such things as fluid being sealed and stroke speed.

Parker Hannifin Corporation
Engineered Polymer Systems Division
Phone: 801 972 3000

The Parker Advantage

Parker is the world's leading diversified manufacturer of motion and control technologies and systems, providing precision-engineered solutions for a wide variety of commercial, mobile, industrial and aerospace markets. The Engineered Polymer Systems (EPS) Division of Parker Seal Group, has over 40 years experience designing and manufacturing elastomeric, polymeric and plastic seals, materials, and sealing systems for dynamic applications. Working with Parker EPS Division gives you access to all of Parker's Seal Group in North America, Europe, and Asia.

EPS Division Salt Lake City Operations

Worldwide Manufacturing

Parker Seal Group and EPS Division's manufacturing facilities for dynamic seals include:

North America:

EPS Division Salt Lake City
Division Headquarters
Plastic & Rubber Operations
2220 South 3600 West
Salt Lake City, UT 84119

EPS Division Nacogdoches
Clipper Operations
Oilfield Rubber Operations
Expansion Joint Operations
403 Industrial Blvd.
Nacogdoches, TX 75964
Ph: (800) 233-3900

EPS Division PTFE Operations:
EPS Division, Elgin Operations
2565 Northwest Parkway
Elgin, IL 60124
Ph: (847) 783-4300

EPS Division, Marion Operations
3967 Buffalo Street
Marion, NY 14505
Ph: (315) 926-4211

EPS Division, Baja Operations
Baja, Mexico
Ph: (619) 671-3257

EPS Division Chicago (Elgin)

EPS Division Nacogdoches

EPS Division Marion

EPS Division Baja

09/01/07

Parker Hannifin Corporation
Engineered Polymer Systems Division
Phone: 801 972 3000

Europe:

Packing Operations:

Prädifa, Stuttgart, Germany
Ph: (+49) 7142 351-0

PTFE Operations:

Polar Seals ApS, Espergaerde, Denmark
Ph: (+45) 49 121700

Advanced Products NV, Boom, Belgium
Ph: (+32) 3 880 81 50

Sadska, Czech Republic
Ph: (+420) 325 555 111

Asia:

Parker Hannifin Motion & Control Co., Ltd.
Shanghai, China
Ph: (+86) 21 28995181

Bietigheim

Denmark

Belgium

Czech Republic

Manufacturing Excellence

Parker's manufacturing capabilities accommodate a wide range of dynamic sealing needs, providing the following value benefits to our customers:

- All manufacturing operations offer state of the art processes and procedures that enable Parker to provide world class products, in both standard and custom profiles.
- Specialized cellular manufacturing and lean concepts enable Parker to handle both low and high volume runs with equal efficiency.
- Breadth of tooling capability produces diameters as small as 1/16 inch and as large as 9 feet without splicing.
- Custom high speed trim machines ensure a sharp sealing edge for the ultimate seal performance wherever possible.

Rubber Operations

With over 400 unique rubber compounds, Parker has the largest selection of materials available in the industry. Our material offering includes custom blends of nitrile, ethylene propylene and fluorocarbons, among others. If an application demands unique material specifications, our in-house chemists have the expertise and capability to assist in specifying and validating optimal materials to meet system requirements. State of the art rubber molding processes such as compression, transfer, injection and injection-compression are used to manufacture the highest quality products.

Rubber Injection Press

Plastic Operations

Our plastics material offering includes such seal industry standards as Molythane™, PolyMyte™, WearGard™, MolyGard™, and many more. Parker's Resilon™ family offers the highest temperature performance of any urethane in the industry. Our commitment to quality and research and development remains a top priority to ensure leading edge status in new material development. With in-house processing, from manufacturing the plastic pellet to molding the finished product, Parker maintains strict controls which ensure the delivery of quality products from quality materials — start to finish.

Plastic Manufacturing

PTFE Operations

Parker's PTFE operations manufacture high quality machined seals from ¼ inch to 72 inches in diameter, utilizing virgin and proprietary blends of filled PTFE. A wide variety of PTFE fluid power seals are manufactured on state of the art CNC equipment with live tooling and multi-axis capabilities. Automated processing allows the efficient handling of both low and high volume runs. PTFE production at Parker is entirely an internal system, from material blending and molding to sintering and CNC machining. Our commitment to quality and service is supported by investment in advanced technology, test and inspection methods.

PTFE Manufacturing

Parker Hannifin Corporation
Engineered Polymer Systems Division
Phone: 801 972 3000

Applications Engineering

Our team of application engineers can help you find the most reliable, cost-effective sealing solution for your product. These engineers are experts, combining decades of sealing experience in real-world applications with a full complement of technology-driven tools to produce the answers you need.

FEA

Utilizing advanced non-linear Finite Element Analysis (FEA) software our engineers can perform extremely accurate virtual simulations of material performance based on actual physical test data. These simulations eliminate the need for multiple iterations of costly prototype tooling, and dramatically reduce development lead times. They also ensure first-time selection of the best material and geometry for your application.

Mechanical Test Lab

Parker's mechanical test lab is an important asset for validating new designs and qualifying seals to customers' performance specifications. Our sophisticated mechanical testing lab utilizes several breakthrough technologies, enabling engineers to validate seals and sealing systems for hydraulic, pneumatic and rotary systems. All product testing is carried out in accordance with ASTM and SAE specifications as well as customer-specific requirements.

Hydraulic testing capabilities include pressures up to 10,000 psi with environmental chambers to control temperatures from -40 to 300 °F. Tests can be performed on assembled cylinders or can be configured on test stands which isolate performance of rod seals, piston seals and wipers for troubleshooting and fine tuning. For heavy contamination situations, our dust chamber can be used to simulate the most rigorous operating environments, putting seals to the ultimate test.

Pneumatic testing is also environmentally controlled to simulate a variety of operating conditions. Endurance and life cycle tests can be performed on applications of all speeds and pressures, from automation and assembly cylinders to high speed pneumatic hand tools.

Rotary testing capabilities range from low speed, high pressure hydraulic swivels to high speed gear box and bearing applications in extreme operating conditions, validating seal performance across a wide range of industries.

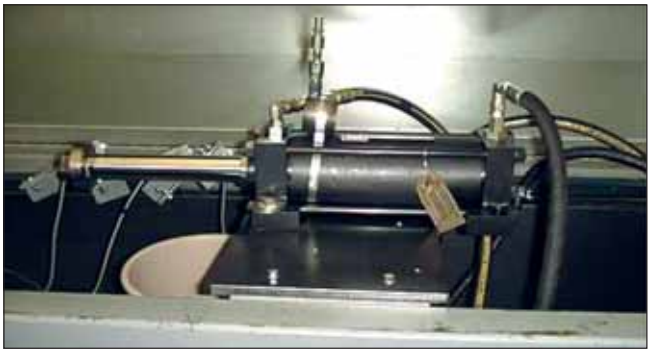

Low pressure life cycle testing

Pneumatic cylinder testing

High pressure hydraulic leakage testing

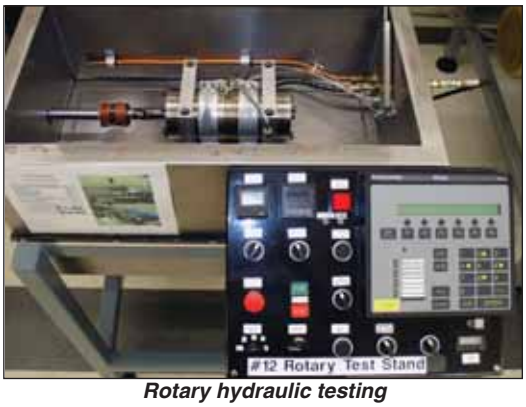

Rotary hydraulic testing

09/01/07

Parker Hannifin Corporation
Engineered Polymer Systems Division
Phone: 801 972 3000

Premier Customer Support

Worldwide and local support is just a phone call away. Our local Parker sales representatives provide a single point of contact for local sealing support. Our established worldwide network of over 300 distributor and service center locations combined with factory direct representatives, including global sales and engineering, ensures access to quality products and engineering services anytime, anywhere.

Customer service is a key component of the Parker package. Electronic ordering systems such as EDI and PHconnect make placing and tracking orders easy. Our knowledgeable customer service representatives are only a phone call away at 801 972 3000.

CMM: Coordinate measuring tool inspection

SmartScope™ inspection

Parker is consistently willing to explore new ideas with the companies and individuals we serve. Customers come to Parker for different reasons, but our role is always the same . . . working to use our expertise and help our customers engineer their success.

Quality Commitment

Parker is committed to consistently delivering excellence in quality and service through continuous improvement of our people, products and systems. Our manufacturing facilities are registered to either AS9100, ISO/9000, or TS16949 standards.

Our commitment to quality and service is supported by our investment in advanced test and inspection methods and equipment. Parker constantly strives to improve customer satisfaction and product quality through the implementation of:

- Six Sigma
- Lean manufacturing
- Kaizen events
- TQM
- Advanced product quality planning (APQP)
- Feasibility studies

Parker Hannifin Corporation
Engineered Polymer Systems Division
Phone: 801 972 3000

Contents

Sealing Theory 2-1
- Static vs. Dynamic Sealing 2-1
- Leakage Control 2-2
- Lip vs. Squeeze Seals 2-2
- Effects of Lip Geometries 2-3
- Friction..... 2-3
- Pressure Effects & Extrusion... 2-4
- Seal Wear..... 2-5
- Seal Stability..... 2-6
- Surface Speed..... 2-6
- Compression Set..... 2-7
- Influence of Temperature..... 2-7

General Guidelines for Hardware Design 2-8

Hardware Surface Finish
- Surface Finish Guidelines 2-9
- Surface Finish FAQs..... 2-13

Installation
- Considerations 2-14
- Installation Tools - Piston..... 2-16
- Installation Tools - Rod 2-17

Finite Element Analysis 2-18

Parker fluid power seals for all application technologies

Seals have been used since ancient times and have evolved into a wide variety of shapes and materials. For those who are not familiar with sealing technology, the number of options available can be confusing. Selecting the most suitable product for a given application can be difficult. This engineering section will assist in product selection by explaining the fundamentals of seal design and material technology.

Sealing Theory

Static vs. Dynamic Sealing

Every seal, whether static or dynamic, must seal against at least two contacting surfaces. In static applications, both surfaces are non-moving relative to one another. In dynamic applications at least one surface is in motion relative to the other sealing surface(s). For example, in a standard hydraulic cylinder, the rod and piston seals would be classified as dynamic seals, while the seal between the bore and the head gland would be considered a static seal.

In both static and dynamic applications, a certain amount of squeeze or compression is required upon installation to maintain contact with the sealing surfaces and prevent fluid leakage. Dynamic applications in particular involve other variables and require that additional factors be evaluated to ensure proper system performance. These variables are discussed in the following sections.

Fig. 2-1. Hydraulic cylinder

Parker Hannifin Corporation
Engineered Polymer Systems Division
Phone: 801 972 3000

2

Leakage Control

When choosing a sealing system, the desired result is ultimately leakage control. Seal design and material improvements have made it possible not only to have seal combinations that provide zero leakage, but also provide extended life in a variety of applications. Aside from the seals themselves, a thorough understanding of system parameters is necessary to obtain the best results.

Optimal sealing is best achieved by taking a systems approach to the seal package rather than considering components individually. Our profiles have been designed specifically to complement one another to create high performance systems. For example, pairing a Parker rod seal with a Parker wiper minimizes fluid leakage and maximizes contamination exclusion. Our rod seals are designed with knife-trimmed lips to ensure the best possible film breaking. This dry rod technology permits the wiper to be extremely aggressive, excluding contamination without building up oil leakage around the wiper. Another systems approach to effectively control leakage is to incorporate multiple sealing lips. Parker's BR buffer ring, BT u-cup and AH double-lip canned wiper are designed to work together to give optimized performance and the driest sealing available in the industry (see Figure 2-2).

Figure 2-2. BR, BT, AH sealing system for leakage control

Even when appropriate seals are specified, it is still possible to experience leakage due to factors extending beyond the seals themselves. Examples are hardware considerations like surface finish and installation damage, seal storage, chemical wash downs, maintenance and contamination. Adhering to the design recommendations found herein not only for seals, but also for the mating hardware will provide the greatest likelihood of minimized leakage.

Lip vs. Squeeze Seals

The cross-sectional shape of a seal dramatically affects how it functions, especially at low pressure. The greatest trade-off in dynamic sealing is low friction performance vs. low pressure sealability. At low pressure, friction, wear and sealing ability are affected by whether or not the seal is a lip or squeeze profile (see Figure 2-3). With this in mind, seals are often categorized as either "lip seals" or "squeeze seals," and many fall somewhere in between. Lip seals are characterized by low friction and low wear; however, they also generate poor low pressure sealability. Squeeze seals are characterized by just the opposite: high friction and high wear, but better low pressure sealability.

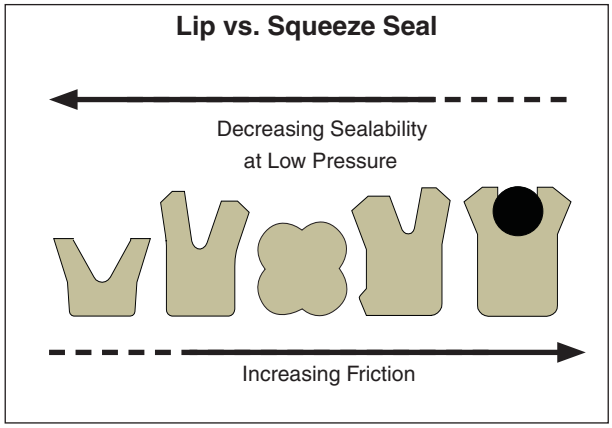

Figure 2-3. Lip seal vs. squeeze seal

As described above, a squeeze type seal will generate much more sealing force than a lip type seal. The assumption here is that both seals are under zero or low pressure. However, as fluid pressure increases, the differences between seal types become insignificant due to the force from the fluid pressure overcoming the designed squeeze. Pressure generally improves leakage control, but increases friction and its associated heat, wear and potential for extrusion.

In pneumatic applications, low friction is of the utmost importance. As such, lip seals are an excellent choice for these low pressure applications. Conversely, in hydraulic cylinders, where high system pressures easily overcome frictional forces, squeeze seals are often the appropriate choice. An example of a hydraulic application in which a squeeze seal would not be appropriate is a gravity returned hydraulic ram. In this case, a lip type hydraulic seal would generate lower friction, allowing the gravity return to function properly.

Parker Hannifin Corporation
Engineered Polymer Systems Division
Phone: 801 972 3000

Effects of Lip Geometries

Lip geometry will determine several functions of the seal. Force concentration on the shaft, film breaking ability, hydroplaning characteristics and contamination exclusion are all factors dependent on lip shape. Table 2-1 shows four different lip shapes and provides helpful insights for choosing an appropriate lip geometry.

Table 2-1. Seal lip contact shape

Contact Shape	Rounded	Straight Cut	Beveled	Square
Seal Lip Shape Shape of Contact Force/ Stress Profile	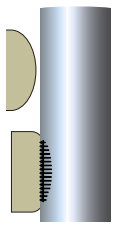	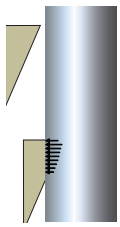	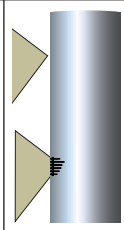	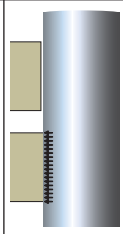
Film Breaking Ability	Low	High	Very High	Medium
Contamin-ation Exclusion	Low	Very High	Low	High
Tendency to Hydroplane	High	Very Low	Low	Medium
Typical Uses	Pneumatic U-cups	Wipers and Piston Seals	Rod Seals	Piston Seals

Friction

Friction is a function of the radial force exerted by the seal and the coefficient of friction between the seal and the dynamic sealing surface. Reducing friction is generally desirable, but not always necessary. Friction is undesirable because of heat generation, seal wear and reduced system efficiency.

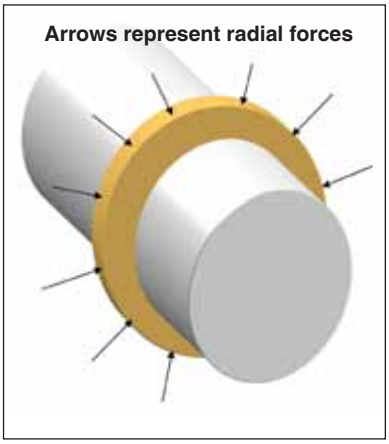

Figure 2-4. Radial force

Factors that affect the radial force are:
- Pressure
- Material modulus
- Temperature
- Lip geometry
- Squeeze vs. lip seal

Factors that affect the coefficient of friction are:
- Seal material
- Dynamic surface roughness
- Temperature
- Lubrication

When the proper seal selection is made, most seals will function such that friction is not a concern. However, when friction becomes critical, there are several ways to reduce it:
- Reduce the lip cross-section
- Decrease lip squeeze
- Change seal material
- Evaluate the hardware's surface finish
- Reduce system pressure
- Improve lubrication

Lowering friction increases seal life by reducing wear, increasing extrusion resistance, decreasing compression set and the rate of chemical attack.

***Breakaway friction** must be overcome for movement to begin. It is influenced by the duration in which an application remains stationary. The longer the duration, the more lubrication will be forced out from between the seal and the contacting surface. The seal material then conforms to the profile of the surface finish. These events increase breakaway friction.*

Stick-slip is characterized by distinct stop-start movement of the cylinder, and may be so rapid that it resembles severe vibration, high pitched noise or chatter. Seals are often thought to be the source of the stick-slip, but other components or hardware can create this issue.

Causes of stick-slip include swelling of wear rings or back-up rings, extreme side-loading, valve pulsation, poor fluid lubricity, external sliding surfaces or seal pressure trapping. This condition can be puzzling or difficult to resolve. Possible causes and trouble-shooting solutions are listed in the following Table 2-2.

Table 2-2. Stick-slip causes & troubleshooting tips

Possible Causes	Troubleshooting Tips
Surface finish out of specification	Verify surface is neither too smooth or too rough
Poor fluid lubricity	Change fluid or use oil treatments or friction reducers
Binding wear rings	Check gland dimensions, check for thermal or chemical swell
Side loading	Review cylinder alignment, incorporate adequate bearing area
Seal friction	Use material with lower coefficient of friction
Cycle speed	Slow movement increases likelihood of stick-slip
Temperature	High temperature softens seals, expands wear rings, and can cause thermal expansion differences within hardware
Valve pulsation	Ensure valves are properly sized and adjusted
External hardware	Review system for harmonic resonance

Pressure Effects and Extrusion

Extrusion occurs when fluid pressure forces the seal material into the clearance gap between mating hardware. Dynamic motion further promotes extrusion, as surfaces in motion tend to pull material into the extrusion gap, generating additional frictional forces and heat. This can cause premature failure via several modes. Extruded seal material can break away and get caught underneath sealing lips, creating leak paths. As material continues to break away, seal geometry erodes, causing instability and eventual leakage. Additionally, heat generated from added friction will cause the seals to take a compression set, dramatically shortening their life.

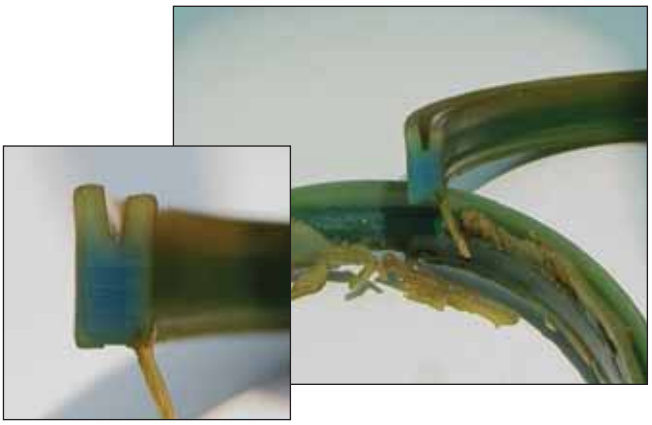

Figure 2-5. Extrusion damage

Careful design considerations should be evaluated to prevent extrusion. For example, minimizing clearance gaps and selecting a proper material based on system temperature, pressure and fluid are both helpful in reducing the risk of extrusion. As clearance gaps increase, less pressure is required in order for extrusion to occur. Higher temperatures can also play a role in this effect by causing seal materials to soften, encouraging extrusion at lower pressures. If the seal material chosen is not suitable to be used in the system fluid, softening due to chemical attack can also decrease its ability to resist extrusion.

The following Table 2-3 lists possible causes of extrusion and troubleshooting tips for preventative or corrective measures.

Table 2-3. Extrusion causes and troubleshooting tips

Possible Causes
Large extrusion gaps
High operating temperature
Soft materials
High system pressure
Pressure spikes
Side loading
Wear rings
Chemical compatibility
Troubleshooting Tips
Reduce extrusion gaps
Check gland dimensions
Replace commercial grade wear rings with tight tolerance wear rings
Incorporate back-up rings
Evaluate size and positioning of wear rings for side load resistance
Consider harder, higher modulus and tensile strength compound
Match seal compound for pressure, temperature and fluid compatibility

By definition, the radial gap is one-half of the diametrical gap. The actual extrusion gap is often mistaken as the radial gap. This is too optimistic in most cases because side loading of the rod and piston will shift the diametrical clearance to one side. Often, gravity alone is sufficient for this to occur. Good practice is to design around worst case conditions so that extrusion and seal damage do not occur. Table 2-4 provides maximum *radial* extrusion gaps for various seal compounds.

As a general rule of thumb, *the pressure rating of dynamic seals will be approximately one-half that of static seals.*

09/01/07

Parker Hannifin Corporation
Engineered Polymer Systems Division
Phone: 801 972 3000

Table 2-4. Typical pressure ratings for standard seal compounds in reciprocating applications at 160°F (see Note)

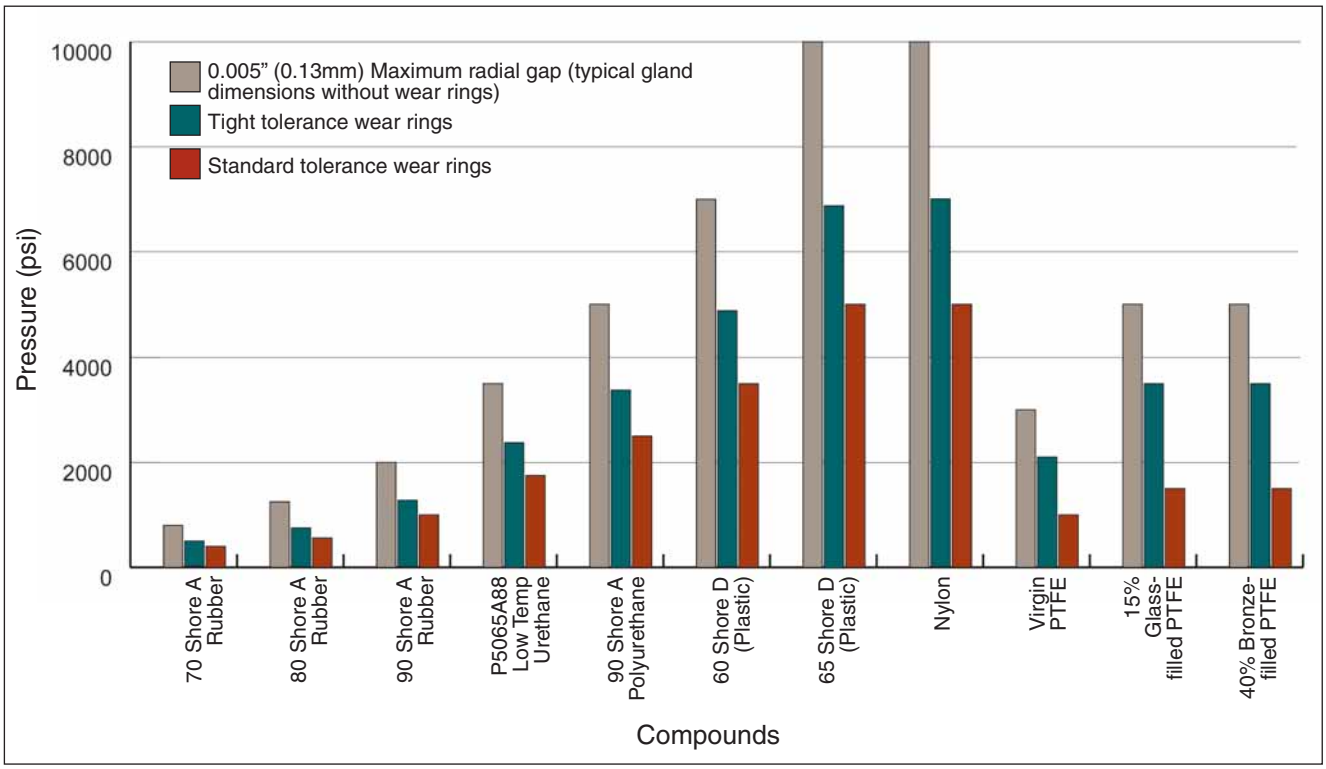

Note: Pressure ratings are based upon a test temperature of 160° F (70 °C). Lower temperatures will increase a material's pressure rating. Higher temperatures will increase pressure ratings. Maximum radial gap is equal to the diametrical gap when wear rings are not used. Wear rings keep hardware concentric, but increase extrusion gaps to keep metal-to-metal contact from occurring, thereby decreasing pressure ratings when used.

As noted in Table 2-4, pressure ratings decrease when wear rings are used due to the larger extrusion gaps required to eliminate metal-to-metal contact. If wear rings are used, be sure to consult Section 9 (Wear Rings) and Section 10 (Back-ups) for appropriate hardware dimensions. **Wear ring hardware dimensions for the piston and rod throat diameters always supersede those dimensions called out for the seals themselves.**

Seal Wear

Seals will inevitably wear in dynamic applications, but with appropriate design considerations, this can be minimized. The wear pattern should be even and consistent around the circumference of the dynamic lip. A small amount of even wear will not drastically affect seal performance; however, if the wear patterns are uneven or grooved, or if the amount of wear is excessive, performance may be dramatically reduced. There are many factors that influence seal wear, many of which are described in the following Table 2-5.

Table 2-5. Factors influencing seal wear

Factors that Influence Seal Wear	
Rough surface finish	Excessive abrasion may occur above 12 µin Ra
Ultra smooth surface finish	Surface finishes below 2 µin Ra can create aggressive seal wear due to lack of lubrication
High pressure	Increases the radial force of the seal against the dynamic surface
High temperature	While hot, materials soften, thus reducing tensile strength
Poor fluid lubricity	Increases friction and temperature at sealing contact point
Tensile strength of seal compound	Higher tensile strength increases the material's resistance to tearing and abrading
Fluid incompatibility	Softening of seal compound leads to reduced tensile strength
Coefficient of friction of seal compound	Higher coefficient materials generate higher frictional forces
Abrasive fluid or contamination	Creates grooves in the lip, scores the sealing surface and forms leak paths
Extremely hard sealing surface	Sharp peaks on hard surfaces will not be rounded off during normal contact with the wear rings and seals, accelerating wear conditions

Parker Hannifin Corporation
Engineered Polymer Systems Division
Phone: 801 972 3000

Seal wear may be indicated by flattening out of the contact point, or, in extreme circumstances, may appear along the entire dynamic surface as shown in Figure 2-6.

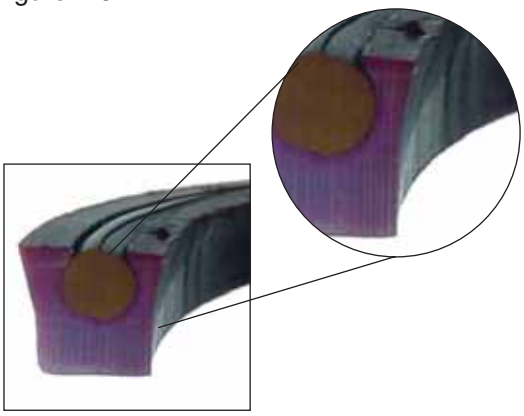

Figure 2-6. Seal wear on dynamic surface

Seal Stability

Dynamic stability is integral to a seal's performance, allowing the lip to effectively contact the sealing surface, eliminating rocking and pumping effects and promoting an even wear pattern at the sealing contact point. Instability can create leakage and seal damage. A typical instability malfunction known as "spiral failure" can occur when o-rings are used in reciprocating applications. Due to frictional forces that occur while the system is cycling, the o-ring will tend to roll or twist in the groove, causing leakage and even possible breakage. A square geometry will tend to resist this better than a round profile, but is not impervious to instability failure. Rectangular geometries provide the best stability in dynamic applications.

Other less obvious factors that influence the stability of a seal are:

- Percent gland fill
- hardness or stiffness of the seal material

Fig. 2-7. Instability failure of a square profile piston seal

- Rough surfaces which create high friction
- Cross-section (larger is better)
- Design features of a seal (i.e. stabilizing lip, non-symmetrical design). Figure 2-8 illustrates how design features can make a seal more stable. In the first FEA plot, the seal is centered in the gland and does not incorporate a stabilizing lip. In the second plot, the seal is loaded against the static gland and includes a stabilizing lip. Stability has been enhanced by the design changes.

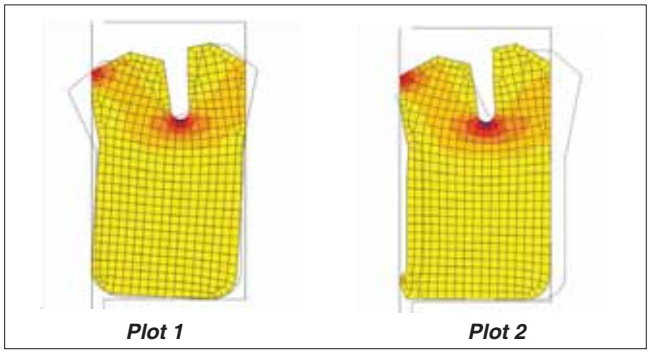

Figure 2-8. Design improvements for increased stability

Surface Speed

The surface speed of a reciprocating shaft can affect the function of a seal. Hydroplaning and frictional heat may occur with excessive speed, while stick-slip, discussed previously in the friction section, is most often associated with slow speed.

Hydroplaning occurs when hydrodynamic forces lift the sealing lip off of the dynamic surface, allowing fluid to bypass the seal. The lip geometry, as well as the overall force on the lip, will influence its ability to resist hydroplaning. Most hydraulic seals are rated for speeds up to 20 inches/second (0.5 m/second), but this may be too fast for certain lip geometries or when the seal has a lightly loaded design. Table 2-1 on page 2-3 shows which lip geometries are subject to hydroplaning. Straight cut and beveled lip geometries are the most effective at resisting hydroplaning so long as sufficient lip loading is present to overcome the hydrodynamic forces.

High surface speeds can create excessive frictional heat. This can create seal problems when the dynamic surface is continuously moving. The under-lip temperature of the seal will become much hotter than the system fluid temperature, especially when the seal is under pressure. If the heat being generated cannot be dissipated, the seal will experience compression set, wear, extrusion and/or increased chemical attack.

Compression Set

Compression set is the inability of a seal to return to its original shape after being compressed. As defined by ASTM, it is the percent of deflection by which the seal fails to recover after a specific deflection, time and temperature. Compression set is calculated using the following equation:

$$\text{Compression Set} = \frac{H_I - H_R}{H_I - H_C} \times 100$$

where

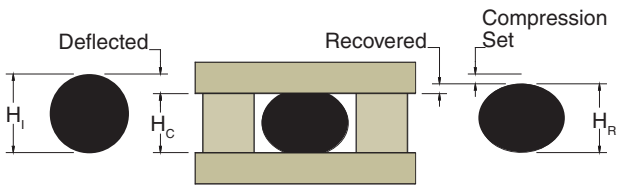

H_I = Initial height
H_C = Compressed height
H_R = Recovered height

Compression set reduces sealing forces, resulting in poor low pressure sealability. It takes place primarily because of excessive exposure to a high temperature. A material's upper end temperature limit may give an indication of its compression set resistance. Although compression set always reduces the seal's dimensions, chemical swell or shrinkage can either positively or negatively impact the final geometry of the seal. If material shrinkage occurs due to the system fluid, the deflection of the seal will decrease, accelerating leakage. If chemical swell is present, it can negate or offset the negative effects of compression set. While it is true that swelling can offset compression set, extreme fluid incompatibility can break down the polymer's chemical structure and cause the material to be reformed in its compressed state.

Lip wear is also a dimensional loss, but is not related to compression set. Dimensional loss due to lip wear will increase the final compression set value.

The seal shown in Figure 2-9 exhibits nearly 100% compression set with minimal wear. Note how the lips flare out very little.

Figure 2-9. Seal exhibiting nearly 100% compression set

Influence of Temperature

All seal materials have a specified operating temperature range (see Section 3, Materials). These temperatures are provided as guidelines and should not be used as specification limits. It is wise practice to stay well within this range, knowing that physical properties are severely degraded as either limit is approached.

Temperature affects extrusion, wear, chemical resistance and compression set, which ultimately influences the sealing ability of a product. High temperatures reduce abrasion resistance, soften materials, allowing them to extrude at lower pressures, increase compression set and can accelerate chemical attack. Low temperatures can cause materials to shrink and harden, reducing resiliency and sealability. Some of these problems can be solved by using low temperature expanders or metal springs as a component of the seal selection (see Section 3, Materials).

Figure 2-10. Progressive effect (hydrolysis) of high temperature water on standard urethane seals (yellow) vs. Parker Resilon WR (4301) seals (aqua).

09/01/07

Parker Hannifin Corporation
Engineered Polymer Systems Division
Phone: 801 972 3000

General Guidelines for Hardware Design

For easy assembly and to avoid damage to the seal during assembly, Parker recommends that designers adhere to the tolerances, surface finishes, leading edge chamfers and dimensions shown in this catalog.

Table 2-6.

Installation Chamfer, Gland Radius, and Taper		
Seal Cross Section	"A" Dimension	"R" Dimension
1/16	0.035	0.003
3/32	0.050	0.015
1/8	0.050	0.015
5/32	0.070	0.015
3/16	0.080	0.015
7/32	0.080	0.015
1/4	0.080	0.015
9/32	0.085	0.015
5/16	0.085	0.015
11/32	0.085	0.015
3/8	0.090	0.015
13/32	0.095	0.015
7/16	0.105	0.030
15/32	0.110	0.030
1/2	0.120	0.030
17/32	0.125	0.030

Installation Chamfer, Gland Radius, and Taper		
Seal Cross Section	"A" Dimension	"R" Dimension
9/16	0.130	0.030
19/32	0.135	0.040
5/8	0.145	0.040
21/32	0.150	0.040
11/16	0.160	0.040
23/32	0.165	0.040
3/4	0.170	0.040
25/32	0.180	0.060
13/16	0.185	0.060
27/32	0.190	0.060
7/8	0.200	0.080
29/32	0.205	0.080
15/16	0.215	0.080
31/32	0.220	0.080
1	0.225	0.080

Figure 2-10.

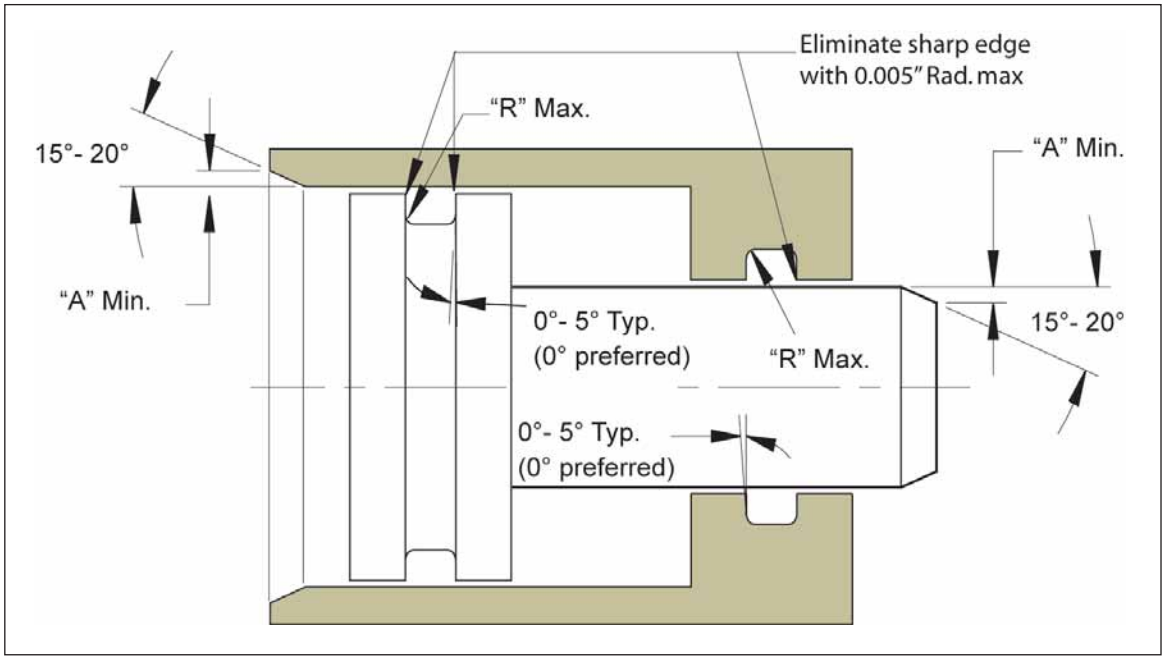

09/01/07

Parker Hannifin Corporation
Engineered Polymer Systems Division
Phone: 801 972 3000

Hardware Surface Finish

Understanding and applying the benefits of appropriate surface finish specifications can dramatically affect the longevity of a sealing system. In a dynamic surface, microscopic variations form recesses which hold an oil film between the seal lip and the moving surface. If the surface is too smooth, friction and seal wear will be high because this oil film will not be present. If the surface is too rough, the variations will create leak paths and accelerate lip wear. For these reasons, it is critical to have an in depth understanding of surface finishes as they pertain to dynamic sealing systems. As such, Parker recommends following the guidelines for surface finish as outlined below or conducting individual testing for specific applications to validate seal function and expected life.

Over the years, greater attention has been given to this subject as realizations about warranty savings and system life become more prevalent. As equipment required to measure and maintain a proper surface finish has evolved and improved, the subject of surface finish has become more complex. Traditional visual inspection gauges are no longer sufficient to effectively measure surface finish. Profilometers are now commonly used to achieve precise measurements with repeatable results. In the same way, the terms used to define a surface finish have also advanced.

For many years, a single surface parameter has often been used to quantify surface finish. RMS (also known as Rq) stands for Root Mean Square and has historically been the most typical value. In more recent years, the Arithmetic Average Roughness, Ra, has become more frequently specified. Using either of these parameters by itself is inadequate to define a proper reciprocating sealing surface. Figure 2-11 depicts why this parameter alone cannot accurately describe a surface finish.

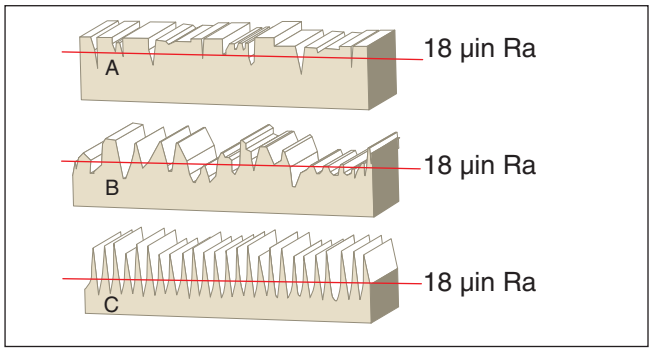

Figure 2-11. Different surface finishes yielding same Ra value

The three surface finishes shown in Figure 2-11 all have the same Ra value but very unique characteristics. The first profile (A) is an example of a proper surface finish for dynamic seals in which the sharp peaks have been minimized or removed. The second profile (B) will exhibit high wear characteristics because of the wide spacing between the peaks. The third profile (C) will also wear out the seals quickly because of its extremely sharp peaks.

Ra is sufficient to define the magnitude of surface roughness, but is insufficient to define a surface entirely in that it only describes the average deviation from the mean line, not the nature of the peaks and valleys in a profile. To obtain an accurate surface description, parameters such as Rp, Rz and Rmr (tp) can be used to define the relative magnitude of the peaks and the spacing between them. These parameters are defined in Table 2-7, and their combination can identify if a surface is too rough or even too smooth for reciprocating applications.

There are other parameters that can be considered for surface finish evaluation. For example, the limitation of Rt is that it considers only one measurement, while Rz, Rp and Rmr consider the full profile.

RMS = Rq. The Root Mean Square (RMS) as defined by ISO 4287:1997 and other standards is often defined as Rq. These terms are interchangeable.

Rq ≠ Ra. Confusion has typically surrounded surrounding these values, leading to misconceptions that they are interchangeable. Rq and Ra will never be equal on typical surfaces. Another misconception is that there is an approximate 11% difference between the two. *Ground and polished* surfaces can have Rq values that are 20 to 50 percent higher than Ra. The 11% difference would only occur if the surface being measured took the form of a true sine wave. A series of tests conducted at Parker have shown Rq to be 30% higher than Ra on average.

What's the Significance? Specifications previously based on a maximum surface finish of 16 µin RMS for *ground and polished* rods should specify a maximum finish of **12 µin Ra**.

2

Table 2-7. Roughness parameter descriptions

Parameter Descriptions

Roughness parameters are defined per ISO 4287:1997 and ISO 4288:1996.

Ra* – Arithmetic average or mean deviation from the center line within a sampling length.

Rq* – Root mean square deviation from the center line within a sampling length.

Rp* – Maximum profile peak height within a sampling length. Also known as R_{pm} in ASME B46.1 – 2002.

Rv* – Maximum profile valley depth within a sampling length. Also known as R_{vm} in ASME B46.1 – 2002.

Rz* – Maximum height of profile within a sampling length (Rz = Rp + Rv).

NOTE: ISO 4287:1984, which measured five peaks and five valleys within a sampling length, is now obsolete. This value would be much lower because additional shorter peaks and valleys are measured. Over the years there have been several Rz definitions used. Care needs to be taken to identify which is used.

Rt – Maximum height of the profile within the evaluation length. An evaluation length is typically five sampling lengths.

Rmr – Relative material ratio measured at a given height relative to a reference zero line. Indicates the amount of surface contact area at this height. Also known as t_p (bearing length ratio) in ASME B46.1 – 2002.

*Parameters are first defined over a sampling length. When multiple sampling lengths are measured, an average value is calculated, resulting in the final value of the parameter. The standard number of sampling lengths per ISO 4287:1997 and ISO 4288:1996 is five.

Figure 2-12 graphically represents Ra. The shaded area, which represents the average height of the profile, Ra, is equal to the area of the hatched portion. The mean line, shown in red, splits the hatched area in half and forms the center line for Ra. The graph also shows Rq, which is higher than Ra.

Figure 2-13 shows the actual surface profile of a polished chrome rod.

Upon examination of the profile, it can be seen that the polishing operation has removed or rounded the peaks producing a positive affect on the characteristics of the sealing surface, as described below by Ra, Rp, Rz and Rmr.

- Ra = 8.9 µin
- Rp = 14.8 µin (which is 1.7 x Ra, less than the 3x guideline)
- Rz = 62.9 µin (which is 7.1 x Ra, less than the 8x guideline)
- Rmr = 74%

Figure 2-13 also illustrates how Rp and Rz are calculated using the following equations:

$$Rp = \frac{Rp1 + Rp2 + Rp3 + Rp4 + Rp5}{5}$$

$$Rz = \frac{Rz1 + Rz2 + Rz3 + Rz4 + Rz5}{5}$$

NOTE: In the profile shown in Figure 2-13, Rt = Rz2 because the tallest peak and deepest valley occur in the same sampling length.

Figure 2-14 considers the same surface and illustrates how the Rmr value of 74% is determined. To accomplish this, locate the height of the curve at 5% material area (this is the reference line or “zero line”). From this height, move down a distance of 25% Rz and locate the new intersection point along the curve. This new intersection point is the actual Rmr value of 74%.

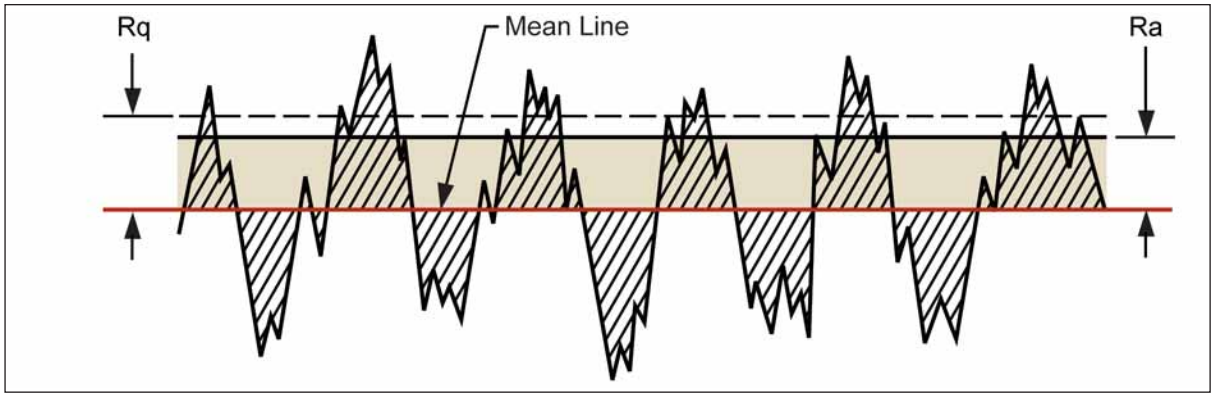

Figure 2-12.

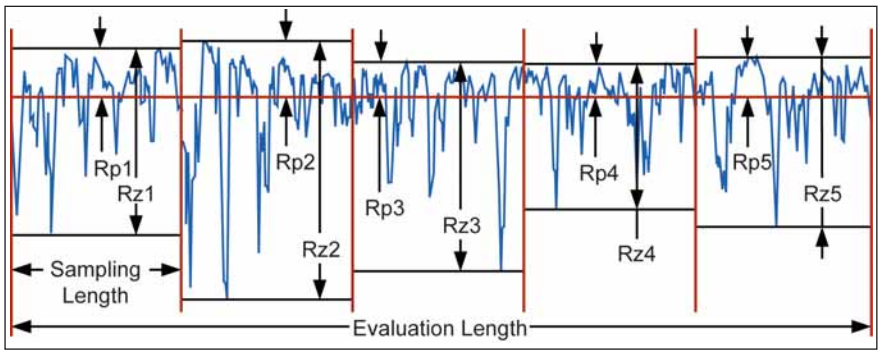

Figure 2-13.

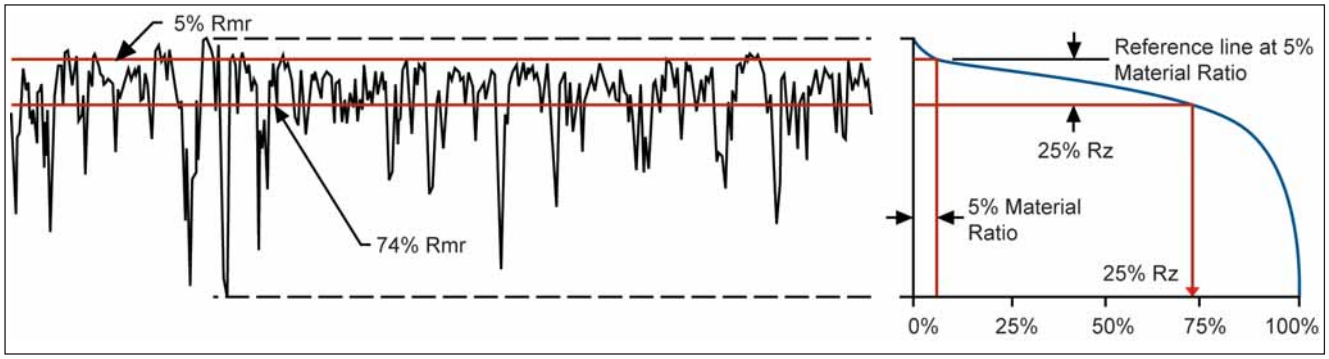

Figure 2-14.

Surface Finish Guidelines for Reciprocating Seals

Recommendations for surface roughness are different for static and dynamic surfaces. Static surfaces, such as seal groove diameters, are generally easier to seal and require less stringent roughness requirements; however, the type of fluid being sealed can affect the guidelines (see Table 2-8). It is important to remember that surface finish recommendations will vary depending upon the seal material of choice. PTFE seals require smoother finishes than seals made from polyurethane and most rubber compounds.

Four parameters have been selected to define a proper surface finish for hydraulic and pneumatic reciprocating applications. These parameters are Ra, Rp, Rz and Rmr. For descriptions of these parameters, please consult Table 2-8.

Grinding as a final process for dynamic sealing surfaces is rarely sufficient. In order to obtain an acceptable Rmr value, the surface must often be ground ***and*** *polished. If the surface is not polished in addition to being ground, the ratio of Rp and Rz to Ra will be too high or Rmr ratio too low.*

09/01/07

Parker Hannifin Corporation
Engineered Polymer Systems Division
Phone: 801 972 3000

2

Table 2-8. Surface Finish Guidelines

Ra Guidelines				
Application	Thermoplastic and Rubber Seals		PTFE Seals	
	Dynamic Surfaces	Static Surfaces	Dynamic Surfaces	Static Surfaces
Cryogenics	-	-	4 µin (0.1 µm) Maximum	8 µin (0.2 µm) Maximum
Helium Gas Hydrogen Gas Freon	3 to 10 µin (0.08 to 0.25 µm)	12 µin (0.3 µm) Maximum	6 µin (0.15 µm) Maximum	12 µin (0.3 µm) Maximum
Air Nitrogen Gas Argon Natural Gas Fuel (Aircraft and Automotive)	3 to 12 µin (0.08 to 0.3 µm)	16 µin (0.4 µm) Maximum	8 µin (0.2 µm) Maximum	16 µin (0.4 µm) Maximum
Water Hydraulic Oil Crude Oil Sealants	3 to 12 µin (0.08 to 0.3 µm)	32 µin (0.8 µm) Maximum	12 µin (0.3 µm) Maximum	32 µin (0.8 µm) Maximum
Rp Guidelines				
Application	Thermoplastic and Rubber Seals		PTFE Seals	
	Dynamic Surfaces	Static Surfaces	Dynamic Surfaces	Static Surfaces
All media/fluids	If Ra ≥ 5 µin (0.13 µm), then Rp ≤ 3 × Ra	-	If Ra ≥ 5 µin (0.13 µm), then Rp ≤ 3 × Ra	-
	If Ra < 5 µin (0.13 µm), then Rp ≤ 3.5 × Ra		If Ra < 5 µin (0.13 µm), then Rp ≤ 3.5 × Ra	
	Example: If Ra = 4 µin, then Rp ≤ 14 µin.			
Rz Guidelines				
Application	Thermoplastic and Rubber Seals		PTFE Seals	
	Dynamic Surfaces	Static Surfaces	Dynamic Surfaces	Static Surfaces
All media/fluids	Rz ≤ 8 × Ra and 70 µin (1.8 µm) Maximum	Rz ≤ 6 × Ra	Rz ≤ 8 × Ra and 64 µin (1.6 µm) Maximum	Rz ≤ 6 × Ra
	Example: If Ra = 4 µin, then Rz ≤ 32 µin (dynamic calculation)			
	Note: Rz values above maximum recommendations will increase seal wear rate.			
Rmr Guidelines				
Application	Thermoplastic and Rubber Seals		PTFE Seals	
	Dynamic Surfaces	Static Surfaces	Dynamic Surfaces	Static Surfaces
All media/fluids	45% to 70% (thermoplastic)	-	60% to 90%	-
	55% to 85% (rubber materials)			
	Rmr is measured at a depth of 25% of the Rz value based upon a reference level (zero line) at 5% material/bearing area.			

09/01/07

Parker Hannifin Corporation
Engineered Polymer Systems Division
Phone: 801 972 3000
www.parkerseals.com

Surface Finish FAQs

What is the difference between RMS (Rq) and Ra?

RMS which stands for Root Mean Square (and now known as Rq), is one way of quantifying the average height of a surface. The Arithmetic Average, Ra, quantifies the surface in a different manner, providing a true mean value. These parameters will almost always be different, but there is not an exact relationship between the two for a typical sealing surface of random peaks and valleys. If a surface were to perfectly resemble a sine wave, the result would place the RMS value 11% higher than Ra, but this is not a very realistic scenario. On various ground and polished surfaces, RMS has been observed to be as much as 50% higher than Ra, but on average, runs about 30% higher. If this 30% average difference is applied to a 16 µin RMS specification, the maximum recommended value would be 12 µin Ra.

Why are Rp and Rz specified as a function of Ra, and not simply a range?

Take a shaft with the minimum recommended value of Ra = 3 µin, for example. Using the formula for Rz, the maximum value would be calculated as 24 µin (8 x 3). If the requirement simply stated a range that allowed Rz values up to 70 µin, this large difference indicates that the surface profile could have many large, thin surface peaks which would abrade the seal quickly. By the same regard, a maximum Ra value of 12 µin would result in an Rz value of 96 µin (12 x 8), which is beyond the recommended maximum value of 70 µin. The same principle applies for Rp: peaks should be removed to reduce seal wear via a polishing process. Grinding without polishing can leave many abrasive surface peaks.

Why is Ry (also known as Rmax) not used in Parker's roughness specification?

Ry only provides a single measurement (a vertical distance from one peak to valley) within the whole evaluation length. In actuality, there may be several peaks and valleys of similar height, or there may only be one large peak or valley. Rp and Rz provide much more accurate results, showing the average of five peak to valley measurements (one measurement in each of the five sampling lengths). Furthermore, ISO 4287:1997 and ISO 4288:1996 standards no longer incorporate the use of Ry.

How can a dynamic surface finish be too smooth?

There are two areas of concern that have been observed on extremely smooth surfaces, the first being seal wear, the second being leakage. When surface finishes have been measured at or below 1 µin Ra, an extremely accelerated seal wear rate has been observed. A small jump to 1.8 to 2 µin Ra shows significant improvement, indicating that the extremely low range should be avoided. With higher values showing even greater life extension, the optimal range for Ra has been determined to be 3 to 12 µin.

Regarding leakage, some seal designs that function well with 6 to 12 µin Ra finishes begin to leak when the finish falls below 3 µin Ra. Due to technological advances, there are many suppliers who manufacture rods with finishes this smooth. It is always necessary to validate seal performance, especially if using an ultra-smooth dynamic surface.

When does a dynamic surface finish become too rough?

Although it is possible for some seals to function when running on rough finishes, there are always concerns with accelerated wear and leakage control. Certain seals have been able to function at 120 µin Ra finishes for short periods of time, but seal life in these cases can be reduced up to five or six times. On the contrary, some seals have failed at surface finishes as low as 16 µin Ra when pressure was insufficient to effectively energize the sealing lips as they rapidly wore out. Even though a rough finish is not a guaranteed failure mode, it is always best to stay within the recommended specifications. Remember that a proper finish also meets the recommendations for Rp, Rz and Rmr listed in the surface roughness guidelines.

Installation

Considerations

Installation techniques may vary considerably from case to case, depending on whether a seal is being replaced as a maintenance procedure or being installed in the original manufacture of reciprocating assemblies. Variations also arise from differences in gland design. A two-piece, split gland design, although rarely used, poses fewer problems than a "snap-in" groove positioned deep inside the body of a long rod gland. In production situations, or where frequent maintenance of similar or identical assemblies is performed, it is customary to utilize special tools to permit fitting a seal into its groove without overstressing it or subjecting it to nicks and cuts during insertion.

The common issues associated with all installation procedures are:

1. Cleanliness. The seal and the hardware it must traverse on its way into the groove, as well as the tools used to install the seal, must be cleaned and wiped with lint-free cloths.

2. Nick and Cut Protection. Threads, sharp corners and burrs can damage the seal. Care should be taken to avoid contact with these surfaces. Burrs must be removed, sharp corners should be blunted or radiused, and threads should be masked or shielded with special insertion tooling (see Figure 2-15). Although it is good practice to take extra care in the handling and manipulation of the seal, this is seldom sufficient and it usually requires either a safety tool or masking to protect the seal against such damage.

3. Lubrication. Both the seal and its installation path must be lubricated prior to insertion. The lubricant should be selected for its compatibility with the seal compound and the working fluid it will later encounter. Often, the working fluid itself can be used as the lubricant (see Table 2-9).

Table 2-9. Seal installation lubricants

Type	Temp. Range °F (°C)	Seal Use	Seal Material Compatibility
Petro-leum base (Parker O Lube)	-20 to 180 (-29 to 82)	Hydrocarbon fluids; Pneumatic systems under 200 psi	Molythane, Resilon, Polymyte, Nitroxile, HNBR, NBR, FKM, (DO NOT use with EPR)
Silicone grease or oil (Parker Super O Lube)	-65 to 400 (-54 to 204)	General purpose; High pressure pneumatic	Molythane, Resilon, Polymyte, Nitroxile, HNBR, NBR, EPR, FKM
Barium grease	-20 to 300 (-29 to 149)	Pneumatic systems under 200 psi	Molythane, Resilon, Polymyte, Nitroxile, HNBR, NBR, FKM
Fluoro-carbon fluid	-65 to 400 (-54 to 204)	Oxygen service	EPR

4. Lead-in Chamfer. A generous lead-in chamfer will act as a guide to aid in seal installation. With the proper lead-in chamfer, the seals can be installed without lip damage. Refer to Figure 2-16 below and Table 2-6 on page 2-8 for proper lead-in chamfer dimensions.

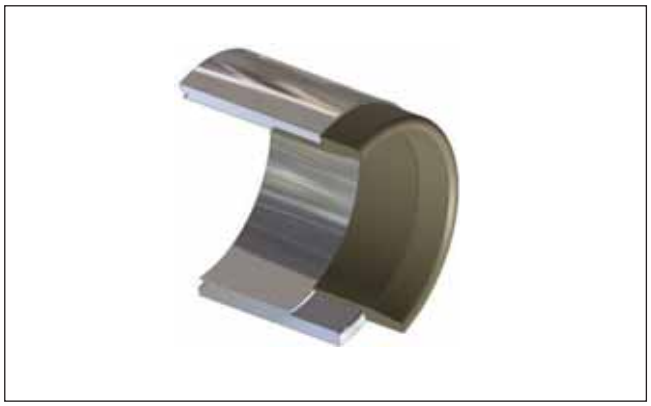

Figure 2-15. Thread protection installation tool cutaway view

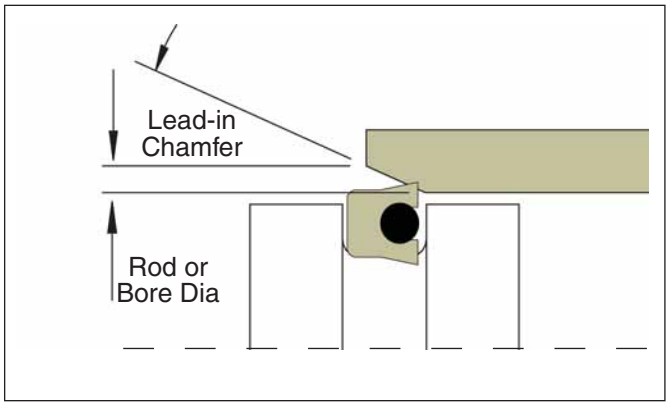

Figure 2-16. Seal installation lead-in chamfer

5. Heating. Where harder or fabric-reinforced compounds are used in snap-in applications, elasticity of the seal may fall short of that required for stretching or compressing onto (or into) the groove. Since seal compounds characteristically exhibit a high thermal coefficient of expansion, and tend to soften somewhat when heated, it is sometimes possible to "soak" the seals in hot lubricant to aid installation. Be sure to observe the compound temperature limits, and avoid heating the seals while stretched. Heating a seal while stretched will invoke the Gow-Joule effect and actually shrink the seal.

6. Cross Section vs. Diameter. Care must be taken to properly match a seal's cross-section to its diameter. If the cross-section is too large in relation to the diameter, it will be difficult to snap-in or stretch the seal into the groove. This condition is typically only associated with polyurethane, PolyMyte and other high modulus materials. The data shown in Table 2-10 may be used as a guide to determine this relationship for ease of installation.

Table 2-10. Seal cross section vs. diameter installation guide

Installation Guide Cross Section vs. Diameter				
Cross Section	Minimum Diameter Rod Seal		Minimum Diameter Piston Seal	
	Poly-urethane	Polymyte	Poly-urethane	Polymyte
1/8"	.750 I.D.	1.000 I.D.	1.250 I.D.	1.750 I.D.
3/16"	1.000 I.D.	1.750 I.D.	1.750 I.D.	2.750 I.D.
1/4"	1.750 I.D.	2.750 I.D.	3.000 I.D.	4.500 I.D.
3/8"	3.000 I.D.	5.000 I.D.	6.000 I.D.	8.000 I.D.
1/2"	6.000 I.D.	8.000 I.D.	10.000 I.D.	12.000 I.D.
3/4"	8.000 I.D.	9.000 I.D.	15.000 I.D.	17.000 I.D.
1"	10.000 I.D.	10.000 I.D.	20.000 I.D.	25.000 I.D.

7. Installation Tools. Use installation tools as recommended (see pages 2-16 and 2-17).

8. Itemize and Use a Check List. All components required to complete a sealing assembly should be itemized and checked off as they are installed. The absence of any single component can cause the entire system to fail.

Parker Hannifin Corporation
Engineered Polymer Systems Division
Phone: 801 972 3000

Installation Tools - Piston Seals

The installation of piston seals can be greatly improved with the use of installation tooling. Tooling not only makes the installation easier, but also safer and cost effective for high volumes as seals are less likely to be damaged when using proper tooling. For piston seal installation using tooling, use the following steps:

1. Inspect all hardware and tooling for any contamination, burrs or sharp edges. Clean, debur, chamfer, or radius where necessary. Make sure the piston and groove are undamaged.

2. If using a two-piece energized cap seal, install the o-ring or rubber energizer into the groove per vendor specifications.

3. Install the expanding mandrel onto the piston (Figure 2-17).

4. Place the seal onto the expanding mandrel, and using the pusher, gently push the seal up the ramp until it snaps into place (Figure 2-18).

5. If back-up rings are to be used, install split versions into their proper location or use the mandrel method in Step 4 for non-split rings.

6. For PTFE cap seals, slide the resizing tool over the seal to compress the seal to its original diameter (Figures 2-19, 2-20).

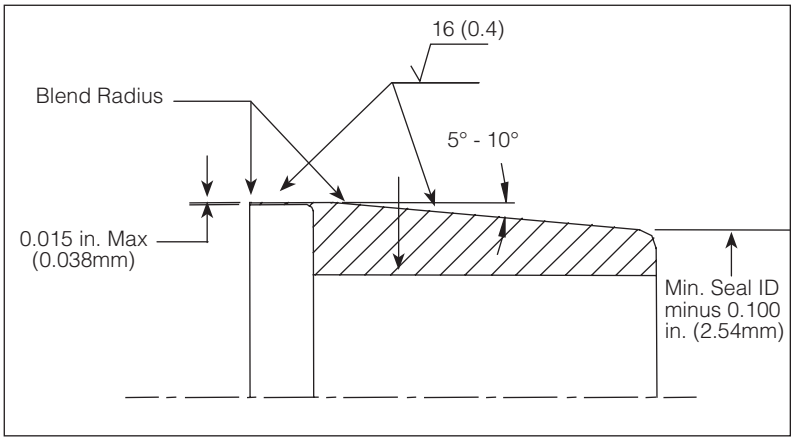

Figure 2-17. Expanding mandrel

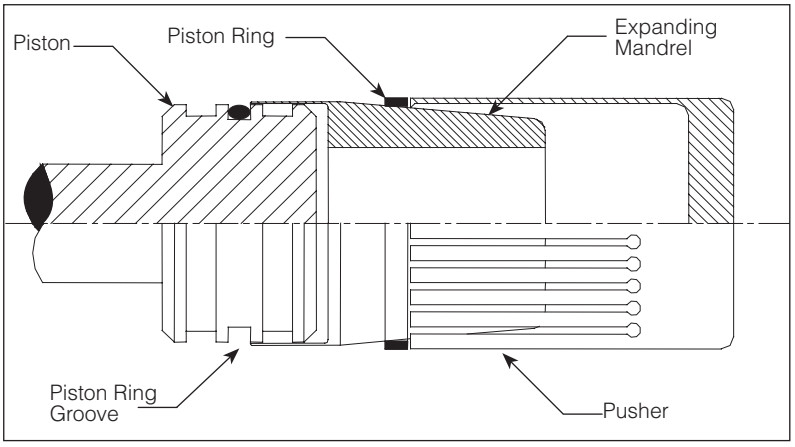

Figure 2-18. Installation of piston seal with tooling

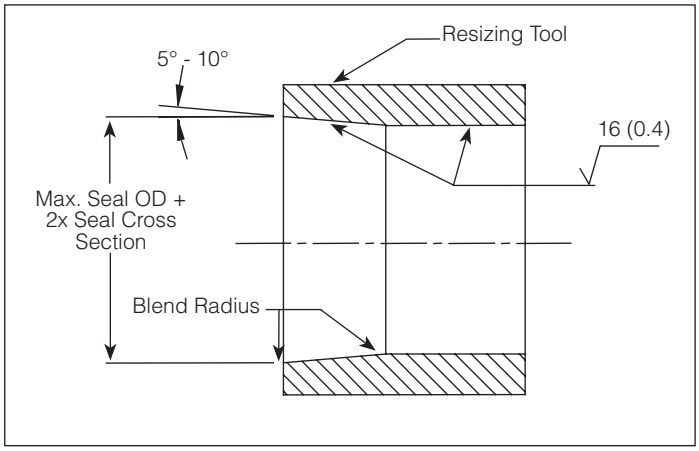

Figure 2-19. Resizing tool

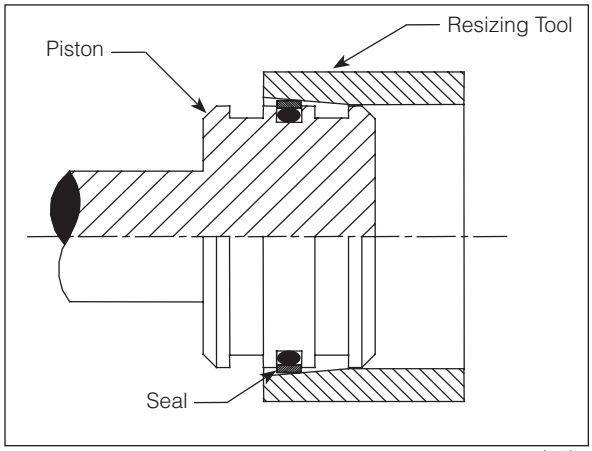

Figure 2-20. Resizing

Parker Hannifin Corporation
Engineered Polymer Systems Division
Phone: 801 972 3000

Installation Tools - Rod Seals

Many rubber, plastic and PTFE rod seals can be manipulated by hand for installation into the seal groove. Small diameter parts or parts with large cross sections may require a two piece (split) groove for installation. Special tooling can be utilized to help the installation process; however, PTFE and PolyMyte seals in particular require caution to ensure the sealing component is not nicked, dented or damaged. The following guidelines provide the steps for proper rod seal installation. If needed, please call your local Parker representative for recommendations.

1. Inspect all hardware and tooling for any contamination, burrs or sharp edges. Clean, debur, chamfer or radius where necessary. Make sure the bore, groove and rod are undamaged.

2. If using a two-piece, energized cap seal, first carefully install the o-ring or rubber energizer into the groove to ensure proper seating.

3. By hand, gently fold the seal into a kidney shape (Figure 2-21) and install into the groove. For rubber and polyurethane seals, the use of a three-prong installation tool can be helpful for folding the seal and installing it into the groove (Figure 2-22).

4. Unfold the seal into the groove, and using your finger, feel the inside diameter of the seal to make sure it is properly seated.

5. For PTFE seals, after unfolding the seal in the groove, use a resizing tool (Figure 2-23) to re-expand the seal.

6. If a back-up ring is to be used with the rod seal, position the seal toward the internal side of the groove to allow space for the b (See ring before installing it into place.

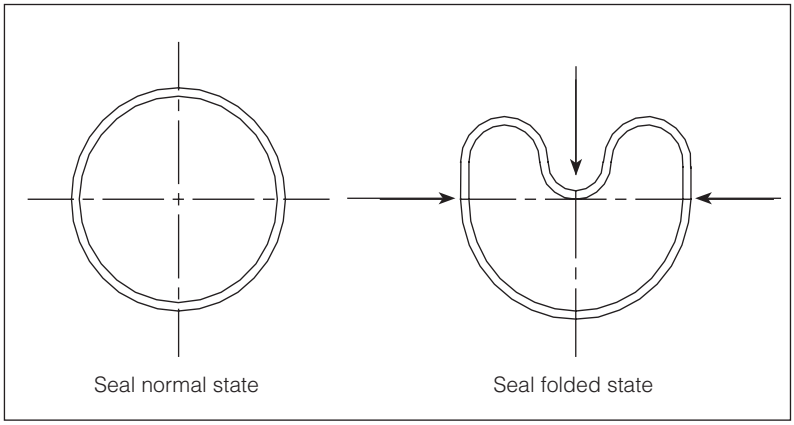

Figure 2-21. Rod seal folding

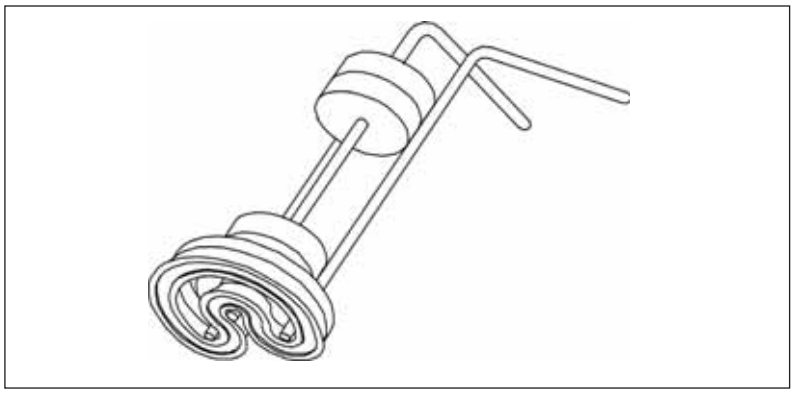

Figure 2-22. Three-leg installation tool for polyurethane and rubber seals

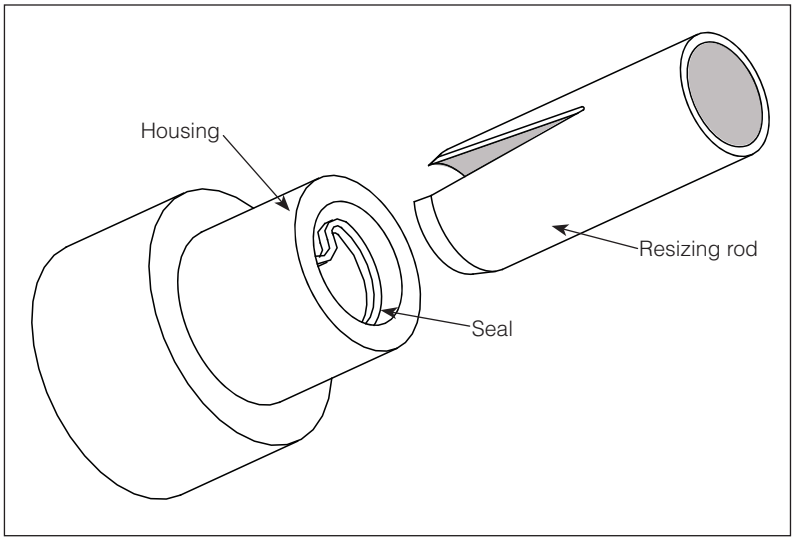

Figure 2-23. Rod seal installation

Finite Element Analysis

Finite Element Analysis (FEA) is a powerful computer simulation tool that allows engineers to evaluate product designs and materials and to consider "what if" scenarios in the development phase. FEA helps minimize time and cost by optimizing a design early in the process, reducing pre-production tooling and testing. Within the simulation program, the product being evaluated is divided into "finite elements," and model parameters such as pressure and seal lip squeeze are defined. The program then repeatedly solves equilibrium equations for each element, creating an overall picture of seal deformation, stress and contact forces (see Figure 2-24). These results can then be linked to application testing to predict performance.

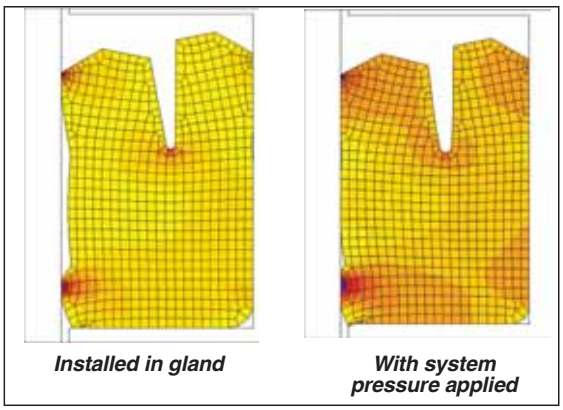

Figure 2-24

Precise material characterization is an essential component of accurately modeling elastomeric products with FEA. Due to the complex nature of elastomers, multiple tests must be performed in order to determine their behavior under stress and strain. Figure 2-25 shows the typical nonlinear stress-strain curves for elastomers compared to the linear property of steel. These nonlinear complexities make performing FEA for elastomers much more difficult than for metal materials. Advances in material characterization are continually being made to improve the ability to capture and predict thermo-viscoelastic effects of elastomers.

FEA results must be linked with lab and field testing to create a baseline to predict seal performance.

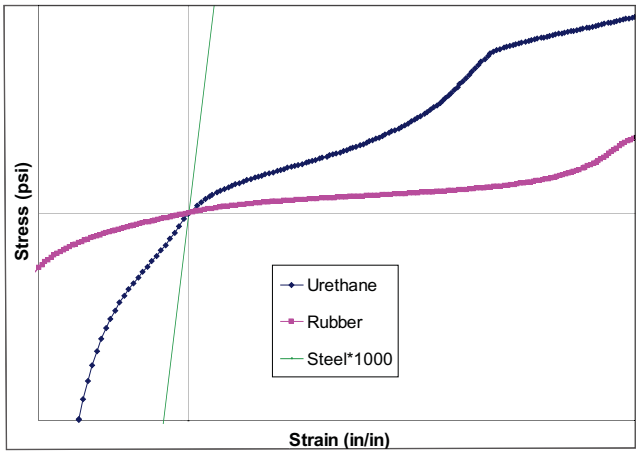

Figure 2-25. Stress/Strain relationship of steel vs. elastomers

Once this baseline is established, design iterations can be performed within FEA until the desired results are achieved and an optimum design is predicted. This evaluation process enables engineers to anticipate the performance of new seal designs by minimizing the time and cost associated with prototype tooling investments (see Figure 2-26).

Like any computer simulation, FEA has its limitations. The cost of performing FEA should always be justified by its results. FEA can provide relative information on leakage performance and wear life, but cannot give concrete answers to questions like, "Will this seal leak, and if so, how much?" and "How many cycles can be expected before failure occurs?"

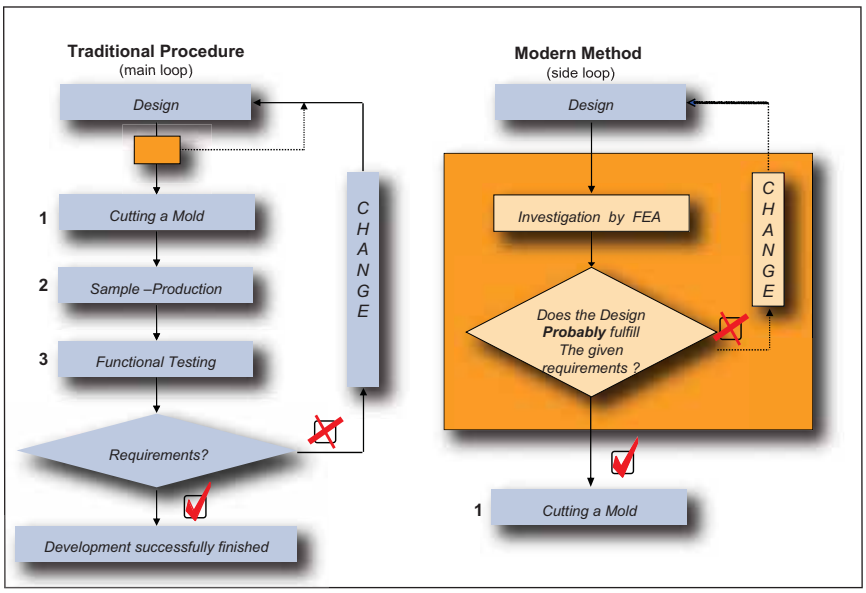

Figure 2-26. Traditional process vs. modern seal development process using FEA

Parker Hannifin Corporation
Engineered Polymer Systems Division
Phone: 801 972 3000

Materials

Contents

Material Classifications..... 3-1
- Thermoplastics
  - Elastomers 3-2
    - TPU - Polyurethanes
    - TPCE - PolyMyte
  - Engineered Resins..... 3-3
    - Nylons
    - UltraCOMP
- Thermoset Elastomers
  - Rubber..... 3-4
    - Nitriles (NBR)
    - Nitroxile (XNBR)
    - Hydrogenated Nitrile (HNBR)
    - Ethylene Propylene (EPR)
    - Fluorocarbon (FKM)
- PTFE 3-6
  - Non-filled PTFE
  - Filled PTFE

Typical Physical Properties..... 3-7
- Hardness 3-7
- Modulus of Elasticity..... 3-8
- Ultimate Tensile Strength..... 3-8
- Ultimate Elongation 3-9
- Resilience..... 3-9
- Compression Set..... 3-9

Parker Materials Typical Physical Properties
- Thermoplastics - Elastomers.... 3-11
- Thermoplastics - Resins..... 3-12
- Thermoset Elastomers 3-14
- PTFE 3-16
  - Energizers for PTFE seals ... 3-18
  - Back-ups for PTFE seals..... 3-19

Chemical Compatibility 3-20

Temperature Limits 3-20

Storage and Handling..... 3-20

Parker engineered materials for the fluid power industry

There are two basic considerations in specifying a well-designed sealing system, both of which are equally integral to system performance: seal configuration, discussed in Section 2, and material, discussed herein. When selecting from the wide range of material options that Parker offers, there are a number of considerations to be made:

- **Typical Physical Properties**
  give a broad picture of a material's performance.
- **Chemical Compatibility**
  matches the sealing material with the system fluid and operating environment.
- **Thermal Capabilities and Extrusion Resistance**
  define limits of application parameters.
- **Friction and Wear**
  help to determine the performance and life of the seal package.
- **Storage, Handling and Installation guidelines**
  ensure seal integrity for optimal performance.

With in-house material development and compounding for thermoplastic, thermoset and PTFE materials, the ability to maintain control over all variables during the manufacturing process allows Parker to achieve optimal physical properties of its thermoplastic materials. Parker's commitment to offering the highest quality sealing materials is unsurpassed in the industry. To ensure long life and system integrity, it is critical to consider all variables in an application before specifying a material.

Materials Test Lab

Parker EPS Material Classifications

Classes of materials offered by Parker for fluid power profiles include:
- Thermoplastics — Elastomers & Engineered Resins
- Thermoset Elastomers — Rubber (Nitrile, Nitroxile, EPR, FKM, etc.)
- PTFE — Non-filled & filled TFE materials.

Parker Hannifin Corporation
Engineered Polymer Systems Division
Phone: 801 972 3000

Thermoplastics

All thermoplastics are resins designed to soften and melt when exposed to heat. Utilizing an injection molding process, thermoplastics are melted at high temperature and injected into the mold. It is then cooled causing the plastic to solidify. If high heat is introduced again, the molded part will melt. The molecules of thermoplastics are held together by physical bonds rather than chemical bonding.

Elastomers — Polyurethane (TPU)

Polyurethanes exhibits outstanding mechanical and physical properties in comparison with other elastomers. Specifically, its wear and extrusion resistance make it a popular choice for hydraulic applications. Its temperature range is generally -65°F to +200°F (-54°C to +93°C), with some compounds, such as Resilon HT, having higher temperature ratings up to +275°F (+135°C). Polyurethanes are highly resistant to petroleum oils, hydrocarbon fuels, oxygen, ozone and weathering. On the other hand, they will deteriorate quickly when exposed to acids, ketones and chlorinated hydrocarbons. Unless specifically formulated to resist hydrolysis (Resilon WR), many types of polyurethanes are sensitive to humidity and hot water. Other acronyms polyurethane may be known by are AU, EU, PU, and TPU or may simply be known as urethanes. For typical physical properties, see Table 3-1 on page 3-11.

P4300A90 — Resilon HT

90 Shore A hardness polyurethane manufactured by Parker specifically for sealing applications. This proprietary compound was developed to offer extended temperature capability, excellent resistance to compression set and high rebound characteristics that are unparalleled in the industry.

P4301A90 — Resilon WR

90 Shore A hardness polyurethane formulated for water resistance. This Parker proprietary compound can be used for both water and petroleum based fluids.

P4304D60 — Resilon ER

60 Shore D hardness polyurethane formulated to resist extrusion. This compound offers higher extrusion resistance for seals and anti-extrusion devices.

Figure 3-1. Resilon WR (P4301A90)

P4311A90 — Resilon HR

90 Shore A hardness polyurethane with high resilience. This formulation resists internal heat generated through hysteresis making this compound ideal for shock applications such as bumpers.

P4500A90 — Polyurethane

90 Shore A hardness polyurethane with good abrasion and extrusion resistance to improve the life of the seal. It also has excellent rebound which enhances response time to shock and side loading.

P4615A90 & P4617D65 — Molythane

P4615A90 is a 90 Shore A hardness, general purpose polyurethane, offering high abrasion and extrusion resistance and is an industrial standard sealing compound.

P4617D65 is a harder, 65 Shore D, version of Molythane ideal for use in anti-extrusion devices.

P4622A90 — Ultrathane

90 Shore A hardness polyurethane formulated with internal lubricants for lower friction to help reduce heat build-up and wear.

P4700A90 — Polyurethane

90 Shore A hardness polyurethane formulated to offer enhanced physical properties over Molythane with improved sealing capabilities due to lower compression set and higher rebound.

P5065A88 — Low Temperature Polyurethane

88 Shore A hardness polyether based polyurethane formulated for an improved low temperature range and higher resilience than Molythane. This compound offers a softer feel for easy installation and is a more cost effective option when compared to P4700A90.

P6000A94 — Polyurethane

94 Shore A hardness polyurethane formulated for an improved abrasion, extrusion, and compression set resistance, as well as higher temperature range than P4700A90.

Elastomers — PolyMyte (TPCE)

PolyMyte is a Parker proprietary polyester elastomer. It has exceptionally high tear strength, abrasion resistance, modulus, and a wide temperature range of -65°F to +275°F (-54°C to +135°C). PolyMyte is resistant to petroleum fluids, some phosphate ester and chlorinated fluids, common solvents and water below 180°F. It is not compatible with cresols, phenols, and highly concentrated acids. Due to its higher hardness and modulus, seals made from this material can be difficult to install. Also, care must be taken not to damage the seal lips during assembly into the gland.

Z4651D60 — PolyMyte

60 Shore D hardness PolyMyte is used for seals in applications requiring extended extrusion resistance and/or fluid compatibility.

Z4652D65 — PolyMyte

65 Shore D hardness PolyMyte is ideal for back-ups and other anti-extrusion devices.

Z4729D55 — Hytrel®[1]

Standard 55 Shore D hardness Hytrel for back-ups and other anti-extrusion devices.

Engineered Resins

Engineered resins such as Nylons and P.E.E.K., sometimes called hard plastics, are generally categorized as compounds with hardness measured on the Rockwell M or R scale. These compounds exhibit high tensile and compressive strength and are typically used in wear rings for bearing support and in auxiliary devices for extrusion resistance. For typical physical properties, see Table 3-2 on page 3-12.

Engineered Resins — Nylons

W4650 — MolyGard

Heat stabilized, internally lubed, 30% glass-reinforced nylon for standard tolerance wear rings.

W4655 — Nylatron®[2]

Wear resistant nylon loaded with molybdenum disulfide (MoS_2) for reduced friction. This compound is ideally suited for use in back-up rings. Nylatron is susceptible to water absorption.

W4733 — WearGard

Heat stabilized, internally lubricated, 35% glass reinforced nylon for tight-tolerance wear rings. WearGard is a dimensionally stable compound with high compressive strength and is featured in Parker's distinctive green color.

Engineered Resins — UltraCOMP™ (PEEK)

UltraCOMP engineered thermoplastics are semi-crystalline materials manufactured for extreme temperatures, chemicals and pressures. Their excellent fatigue resistance and stability in high temperature environments make them the material of choice where other materials fail. With a melt temperature of over 600°F, UltraCOMP can be used at continuous operating temperatures of -65° up to 500° F. Superior

Figure 3-2. UltraCOMP HTP

Draft 08/24/07

1 Hytrel® is a trademark of DuPont

2 Nylatron® is a trademark of Quadrant Enginnering.

Parker Hannifin Corporation
Engineered Polymer Systems Division
Phone: 801 972 3000
www.parkerseals.com

strength and wear resistance properties make it an ideal alternative to metal or metal alloys in applications where weight, metal-to-metal wear or corrosion issues exist. Such capabilities translate into reduced equipment down time and increased productivity. For example, UltraCOMP back-up rings exhibit optimum strength-flexibility for ease of installation and high tensile strength properties for premiere extrusion resistance. UltraCOMP is available in molded geometries, machined geometries and tube stock.

W4685 — UltraCOMP HTP

An unfilled engineered thermoplastic material specified for use in extreme conditions spanning multiple industries. Its excellent tensile strength facilitates its successful use as back-up rings and anti-extrusion devices. In addition, UltraCOMP HTP's elongation properties (>60% per ASTM D638) allow it to be flexed and twisted without breaking.

W4686 — UltraCOMP GF

30% glass filled blend provides enhanced compressive strength over UltraCOMP HTP.

W4737 — UltraCOMP CF

30% carbon fiber blend provides enhanced tensile and compressive strength over UltraCOMP GF.

W4738 — UltraCOMP CGT

10% carbon, 10% glass, and 10% PTFE blend for enhanced compressive strength and reduced friction.

Thermoset Elastomers - Rubber

Unlike thermoplastic elastomers, thermosetting elastomers gain their strength from an irreversible cross linking process that occurs when the compound is subjected to pressure and heat. During this process, or "cure", special chemical agents within the compound react to the heat and pressure to vulcanize the molecules together. Once cured, thermoset compounds obtain the necessary physical properties needed to function in fluid sealing applications. Reheating thermoset compounds will not cause them to melt as thermoplastics do. For typical physical properties, see Table 3-3 on page 3-14.

Nitrile (NBR)

Nitrile rubber (NBR) is the general term for acrylonitrile butadiene copolymer. Nitrile compounds offer good resistance to abrasion, extrusion, and compression set. The acrylonitrile (ACN) content influences the physical properties of the compound. As the ACN content increases, oil and solvent resistance improve, tensile strength, hardness and abrasion resistance increase, while permeability, low temperature flexibility, and resilience decrease. Parker offers a variety of nitrile compounds, formulated with varying ACN content, to provide the best physical properties for a wide range of applications. Typical temperature ratings are -40°F to +250°F (-40°C to +121°C).

Figure 3-3. Thermoset elastomers

N4008A80 — NBR

80 Shore A hardness low temperature nitrile. This is a premium, low ACN nitrile for use when low temperature sealability is the primary requirement.

N0304A75 — NBR

75 Shore A hardness low temperature nitrile. This is a low ACN nitrile with an extended upper end temperature formulated for aerospace T-seal applications. N0304A75 is compliant with AMS-P-83461 which supersedes MIL-P-25732.

N4115A75 — NBR

75 Shore A hardness general purpose nitrile with medium ACN content for use where a softer seal is needed.

N4180A80 — NBR

80 Shore A hardness general purpose nitrile with medium ACN content. N4180A80 has good chemical compatibility, sealability and moderate extrusion resistance. N4180A80 has excellent compression set resistance even at higher temperatures.

N4181A80 — NBR

80 Shore A hardness, medium ACN nitrile with fiber added for reinforcement. The fibers also help to retain lubrication for reduced friction. N4181A80 is often used in the 8600 wiper seal to resist extrusion.

N4121A90 — NBR

90 Shore A hardness, high ACN nitrile with an exceptionally high modulus which gives this compound outstanding extrusion resistance. N4121A90 also has good compression set properties.

Nitroxile™ (Carboxylated Nitrile) (XNBR)

Carboxylated nitriles are formed by exposing nitrile polymer to carboxylic acid groups during polymerization. This forms an improvement over nitrile by producing a more wear resistant seal compound with enhanced modulus and tensile strength. Nitroxile offers exceptionally low friction characteristics and has excellent resistance to petroleum oils, hydrocarbon fuels and water. The typical temperature range for Nitroxile is -10°F to +250°F (-23°C to +121°C).

N4257A85 — XNBR

85 Shore A hardness carboxylated nitrile that has an internal lubricant as an aid to reduce friction. It is ideal for pneumatic applications with excellent compression set properties.

N4274A85 — XNBR

85 Shore A hardness carboxylated nitrile that is formulated with a proprietary internal lubricant for exceptionally low friction operation. This is the premier carboxylated nitrile in the sealing industry.

N4263A90 — XNBR

90 Shore A hardness carboxylated nitrile that is formulated for increased hardness, modulus and tensile strength to provide extra toughness in applications requiring nitrile seals. This compound has excellent resistance to extrusion, explosive decompression and abrasion.

Hydrogenated Nitrile (HNBR)

Hydrogenated nitrile offers improved chemical compatibility and heat resistance over standard nitrile by using hydrogen in the formulation to saturate the backbone of the nitrile molecule. However, the compound usually becomes less flexible at low temperatures. This can be offset to some degree by adjusting the ACN content as is done with NBR. Typical temperature ratings are -25°F to +320°F (-32°C to +160°C).

N4032A80 (KB162)[3] — HNBR

80 Shore A hardness hydrogenated nitrile.

N4031A85 (KB183) — HNBR

85 Shore A hardness hydrogenated nitrile formulated for low temperatures.

N4033A90 (KB163) — HNBR

90 Shore A hardness hydrogenated nitrile formulated for improved chemical compatibility.

N4007A90 — HNBR

90 Shore A hardness hydrogenated nitrile featuring excellent resistance to extrusion and explosive decompression to meet Norsok M-710.

Ethylene Propylene (EPR)

Ethylene propylene has excellent dimensional stability in water-based fluids and steam; however, it should never be exposed to petroleum lubricants, water / oil emulsions, solvents or other petroleum based fluids (CAUTION! Do not lubricate the seals with petroleum oils or greases during installation). Ethylene propylene rubber is compatible with Skydrol®[4] and other phosphate ester fluids used in aircraft hydraulic systems. EPR is also the recommended seal material for automotive brake fluids (DOT 3, 4 and 5) as well as many commercial refrigerants. Ethylene propylene rubber is also useful in sealing weak alkalis, acids, and methyl ethyl ketone (MEK). The typical temperature range is -65°F to +300°F (-54°C to +149°C).

---

3 Compound numbers in parenthesis refer to Parker Seal Group material numbers.

4 Skydrol® is a registered trademark of Solutia Inc.

09/01/07

Parker Hannifin Corporation
Engineered Polymer Systems Division
Phone: 801 972 3000
www.parkerseals.com

E4259A80 — EPR

80 Shore A hardness general purpose EPR with excellent dimensional stability in water-based fluids and steam. This compound has excellent chemical compatibility and compression set resistance.

E4207A90 — EPR

90 Shore A hardness general purpose EPR with excellent dimensional stability in water-based fluids and steam. With its additional hardness it is able to be used at higher pressures than the 80 Durometer compounds. It has excellent compression set properties as well as excellent compatibility with such fluids as DOT 3 brake fluid.

E4270A90 — EPR

90 Shore A hardness EPR formulated for steam/geothermal environments with an upper temperature range of +600°F (+315°C). Excellent compression set resistance.

Fluorocarbon Elastomers (FKM)

Fluorocarbon elastomers are highly specialized polymers that show the best resistance of all rubbers to chemical attack, heat and solvents. FKM is of critical importance in solving problems in aerospace, automotive, chemical and petroleum industries. FKM is suitable for use in most hydraulic fluids except Skydrol® types and ester-ether fluids. Standard temperatures range from -20°F to +400°F (-29°C to +204°C).

V4205A75 — FKM

75 Shore A hardness general purpose fluorocarbon.

V1289A75 — FKM

75 Shore A hardness fluorocarbon formulated for improved low temperature performance of -40°F to +400°F (-40°C to +204°C).

V4208A90 — FKM

90 Shore A hardness general purpose fluorocarbon.

V4266A95 — FKM

95 Shore A hardness extended wear and extrusion resistant fluorocarbon.

Figure 3-4. PTFE

PTFE

PTFE (Polytetrafluoroethylene) offers the following characteristics over thermoplastic and thermoset compounds, making it a unique problem solving solution for sealing applications:

- Low coefficient of friction
  The low coefficient of friction (.06) of PTFE material results from low interfacial forces between its surface and other materials that come in contact. This behavior of PTFE material eliminates any possibility of stick-slip effects in dynamic sealing applications.
- Wide temperature range
  PTFE's high melting point and morphological characteristics allow components made from the resin to be used continuously at service temperatures to 600°F (315°C). For sealing cryogenic fluids below -450°F (-268°C), special designs using PTFE and other fluoropolymers are available.
- Chemically inert
- Dry running capability
- Resist temperature cycling
- High surface speeds
- Low water absorption
- Low dielectric constant and dissipation factor

Enhancing Performance of PTFE with Fillers

In fluid power applications, it can be beneficial to add fillers to PTFE compounds in order to enhance its physical characteristics. Specific fillers can be incorporated to provide improved compression strength, wear, creep and extrusion resistance.

Non-Filled PTFE

0100 — Virgin PTFE

Virgin PTFE has no fillers and is considered FDA and potable water safe.

Filled PTFE

0102 — Modified Virgin PTFE

Virgin PTFE modified with custom pigmentation features similar basic properties as virgin, but offers increased wear and creep resistance and lower gas permeability.

0120 — Mineral Filled

Mineral is ideal for improved higher temperatures and offers low abrasion to soft surfaces. PTFE with this filler can easily be qualified to FDA and other food-grade specifications.

0203 — Fiberglass Filled

Glass fiber is the most common filler with a positive impact on creep performance of PTFE. Glass fiber adds wear resistance and offers good compression strength.

0204 / 0205 — Molybdenum Disulfide and Fiberglass Filled

Molybdenum disulfide (MoS_2) increases the hardness of the seal surface while decreasing friction. It is normally used in small proportions and combined with other fillers such as glass. MoS_2 is inert towards most chemicals.

0301 — Graphite Filled

Graphite filled PTFE has an extremely low coefficient of friction due to the low friction characteristics of graphite. Graphite is chemically inert. Graphite imparts excellent wear properties and high PV values to PTFE.

0307 — Carbon-Graphite Filled

Carbon reduces creep, increases hardness and elevates the thermal conductivity of PTFE. Carbon-graphite compounds have good wear resistance and perform well in non-lubricated applications.

0401 / 0402 – Bronze Filled

Bronze is a self lubricated, long-wearing material that offers superior frictional characteristics and high temperature capabilities.

0501 / 0502 — Carbon Fiber Filled

Carbon fiber lowers creep, increases flex and compressive modulus and raises hardness. Coefficient of thermal expansion is lowered and thermal conductivity is higher for compounds of carbon fiber filled PTFE. This is ideal for automotive applications in shock absorbers and water pumps.

0601 — Aromatic Polyester Filled

Aromatic polyester is excellent for high temperatures and has excellent wear resistance against soft, dynamic surfaces. This filler is not recommended for sealing applications involving steam.

Parker Hannifin Corporation
Engineered Polymer Systems Division
Phone: 801 972 3000

Typical Physical Property Information

There are six significant typical physical properties that affect seal performance. It is important to understand how the physical properties of a compound relate to each sealing application and to know that the fluid being sealed may change these original characteristics. The six critical properties identified below each show detail concerning their impact on sealing as well as measurement techniques.

1 — Hardness.

Hardness, also referred to as durometer, is a property frequently associated with extrusion resistance (see Table 2-4 on page 2-5). It is not a good indication of extrusion resistance when comparing different material classifications. For example, a polyurethane and a nitrile compound with the same hardness will not share the same extrusion resistance. Hardness also relates to low pressure sealability, since the ability of a seal to conform to a mating surface depends, to a high degree, on the hardness of the material. The harder a material, the less it will conform to a sealing surface at low pressure. As hardness increases, modulus and compressive strengths typically increase as well. This means that harder seals are typically more difficult to install and often have greater friction.

Hardness is measured by how easily a specified surface is deformed by an indenter. “Shore A” and “Shore D” are the two most common scales for seal materials. Both scales use a rounded indenter to impact the surface being measured. Shore A is typically used to measure softer materials, while harder materials are measured on the Shore D scale. Although the Shore A scale has a max value of 100, it is recommended to switch to the Shore D scale past 95 Shore A. These two scales overlap one another as shown in Figure 3-5.

Standardized test methods for this physical property are ASTM 2240 and DIN 53505, which corresponds to ISO 48. This test procedure has a repeatability of ±5 points, because its accuracy is dependant on the flatness of the specimen and the skill of the technician. For this reason, measuring material hardness on a seal itself, with its irregular surface, is discouraged and can only be used with caution as a relative value.

A second method of measuring hardness that is seldom used and is only presented here for informational purposes is the International Rubber Hardness Degree (IRHD), as described in ASTM

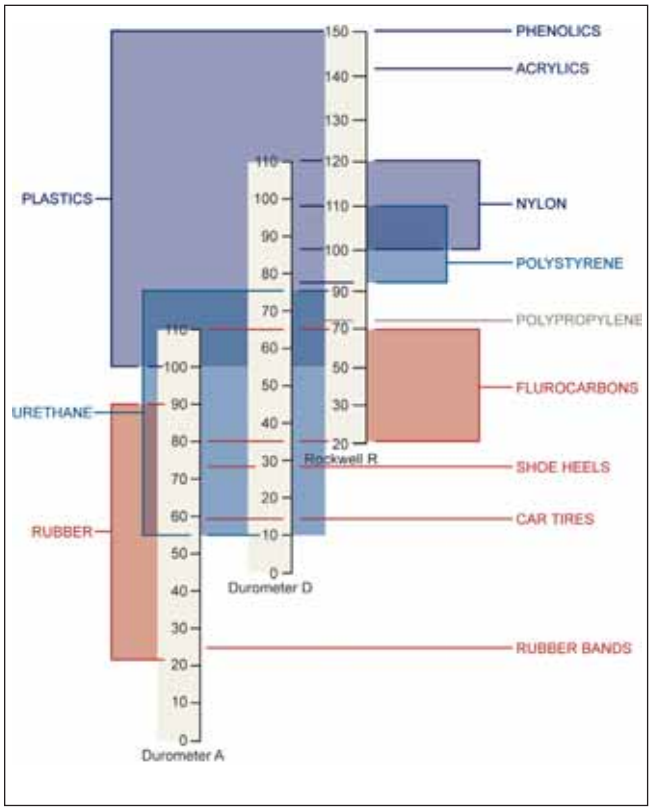

Figure 3-5. Hardness Scale Comparison Between Shore A, Shore D, and Rockwell R

1414/1415, Din 53519, and ISO 1400/1818. The IRHD and Shore methods do not provide comparable values and should not be used to relate one material to another.

2 — Modulus

Modulus is truly what gives a seal material its extrusion resistance. It is a measure of the force required to stretch an elastomer a certain percentage of its original length. Modulus of a material can more simply be thought of as its stiffness and is also an indication of the ease of installation. Higher modulus materials resist stretching and compression, increasing installation difficulty. (ASTM method D412)

3 — Ultimate Tensile Strength

Ultimate tensile strength is closely related to wear resistance, toughness and therefore service life of the seal. This property is the amount of force required to reach ultimate elongation, physically breaking the material. Polyurethane and filled PTFE compounds generally have very high tensile strength, providing the associated excellent tear and abrasion resistance.

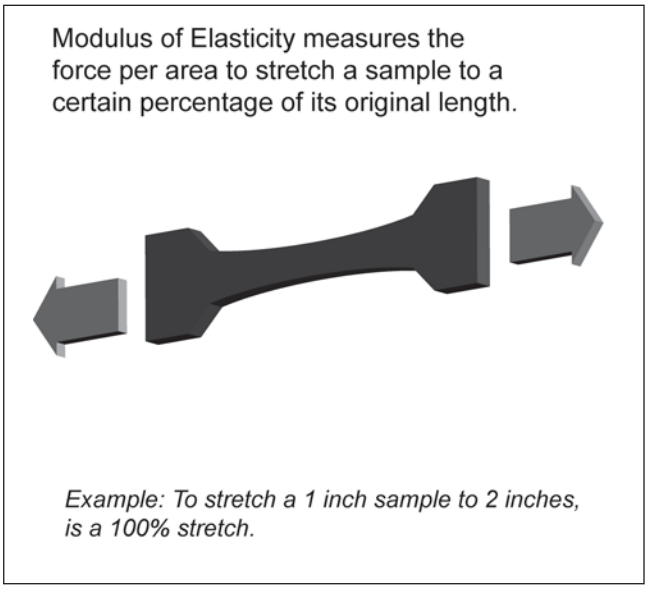

Figure 3-6. Modulus of Elasticity

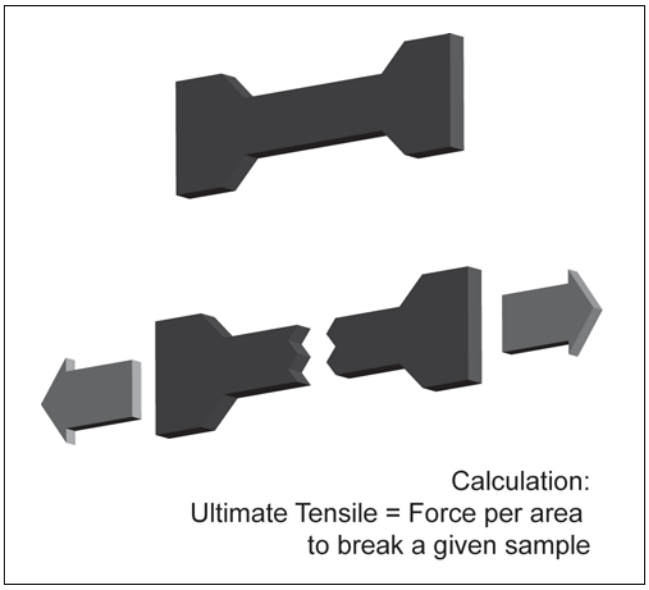

Figure 3-7. Tensile Strength

Most rubber compounds have much lower tensile strength values, often resulting in one fifth the wear life of higher tensile materials. (ASTM method D412 and DIN 53504) ***It should be noted that values obtained from the DIN standard are typically higher than those from the ASTM standard as there is a difference in the test specimen and the pull rate.***

4 — Ultimate Elongation

Ultimate elongation is most closely associated with installation, but can also be a good indicator of chemical compatibility. This property is the distance a material will stretch before breaking, expressed as a percentage of its original length. It can be important in small diameter seals because it can limit the amount of stretch available for installation. Elongation is also a good indicator of chemical compatibility. If changes are observed after a material sample is soaked in a fluid, it is possible that the seal is being adversely affected. In this situation, the fluid will typically attack and break the polymeric chain, reducing the ultimate elongation. (ASTM method D412)

5 — Resilience

Resilience, also known as rebound, strongly correlates to how quickly a seal will respond to changing conditions in a dynamic environment. This property measures the ability of a material to return to its original shape after being deformed, as well as the speed at which it can achieve this.

Examples of conditions that require seals to exhibit excellent resilience are out-of-round cylinders and rapid side loading situations that cause the rod to move sideways quickly. Applications with high vibration or high stroke speed can also benefit from high resiliency seals. (ASTM method D2632, DIN 53512)

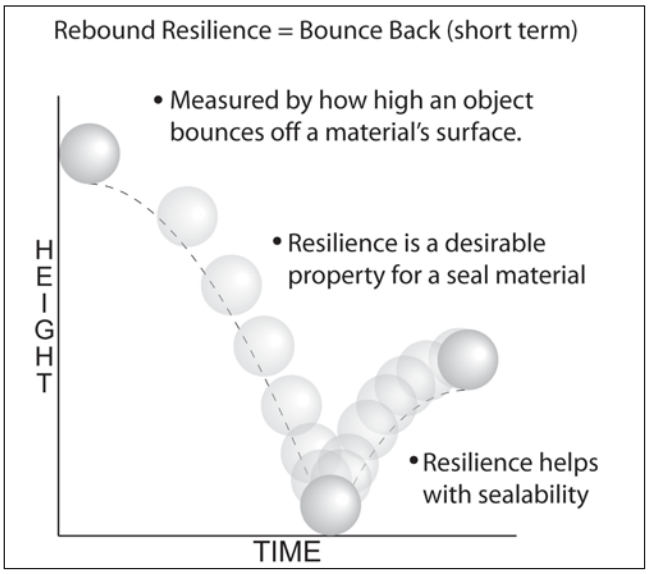

Figure 3-8. Rebound Resilience

6 — Compression Set

Compression set is the inability of a seal to return to its original shape after being compressed. It is associated with a sealing material's "long-term memory" and is considered to be one of the most critical properties of the seal. For a seal to maintain

radial pressure and establish a continuous sealing line, it must resist stress relaxation during the time and at the temperature to which it is exposed. As the seal begins to take a compression set, it loses its inherent ability to seal and may require other influences to maintain a positive sealing force. Examples of such factors would be system pressure or an expander working to energize the sealing lips. The lowest possible compression set value is always advantageous because it represents the least amount of lost sealing force over time.

As defined by ASTM, compression set is the percent of deflection by which the seal fails to recover after a specific deflection, time and temperature (see Fig. 3-9). When comparing compression set values between two materials, it is important to note both the time and temperature of the tests being compared. Even though a typical compression set value is based on a 70 hour period, many times a 22 hour period may be used for time and convenience sake. A 22 hour compression set value will always be dramatically better than that of a 70 hour test under the same temperature condition. It is also important to know that each elastomer family is generally tested at a different temperature or series of temperatures. Be sure that the temperatures of the test data closely approximate the temperature the seal will be used in. (ASTM method D395, DIN 53517)

$$\text{Compression Set} = \frac{H_I - H_R}{H_I - H_C} \times 100$$

where:

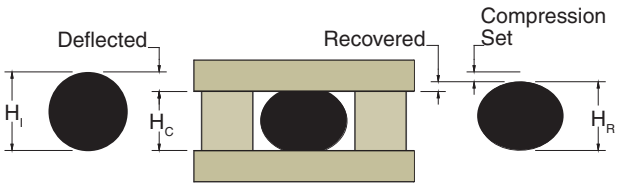

H_I = Initial height
H_C = Compressed height
H_R = Recovered height

Figure 3-9. Compression set calculation

Parker Materials Typical Physical Properties

Typical physical properties for Parker fluid power product materials are shown in the corresponding tables:

Material Classification		Table (page)
Thermoplastics		
Elastomers		Table 3-1, (pg 3-11)
	TPU Polyurethanes	
	TPCE PolyMyte	
Engineered Resins		Table 3-2, (pgs. 3-12, 3-13)
	Nylons	
	UltraCOMP	
Thermoset Elastomers		
	Rubber Nitriles Nitroxile Ethylene Propylene Fluorocarbon	Table 3-3 (pgs. 3-14, 3-15)
PTFE for Fluid Power Seals		
	Non-filled PTFE Filled PTFE	Table 3-4 (pgs. 3-16, 3-17)
	Rubber energizer materials for PTFE fluid power seals	Table 3-5 (pg 3-18)
	Back-up ring materials for PTFE fluid power seals	Table 3-6 (pg 3-19)

Parker Hannifin Corporation
Engineered Polymer Systems Division
Phone: 801 972 3000

Table 3-1. Typical Physical Properties: Thermoplastics — Elastomers

Parker Material Code	Material Trade Name (Color)	Typical Applications & Description	Service Temperature Range °F (°C)	Tensile Strength at Break psi (MPa)	Ultimate Elong-ation	Shore Hardness		100% Modulus psi (MPa)	Compression Set		Re-bound	Abrasion Rating Best = 10
						A	D		Set	at°F (°C)		
Thermoplastic Elastomers — TPU, Polyurethanes												
P4300A90	Polyurethane Resilon HT (Tan)	Proprietary compound offering extended temperature range, high rebound.	-65 to +275 (-54 to +135)	8625 (59.5)	560%	92	-	1793 (12.4)	28.9%	212 (100)	63%	10
P4301A90	Polyurethane Resilon WR (Aqua Blue)	For water or petroleum based fluids.	-35 to 225 (-37 to +107)	7129 (49.2)	514%	90	-	2029 (13.9)	24.8%	158 (70)	45%	8.1
P4304D60	Polyurethane Resilon ER (Brown)	Offers higher extrusion resistance for seals and anti-extrusion devices.	-65 to +275 (-54 to +135)	6521 (44.9)	556%	-	55	2940 (20.3)	32.2%	158 (70)	46%	7.3
P4311A90	Polyurethane Resilon HR (Red)	Formulation resists internal heat generated through hysteresis, ideal for shock applications.	-65 to +275 (-54 to +135)	7229 (49.8)	632%	91	-	1732 (11.9)	33.3%	212 (100)	63%	8.2
P4615A90	Polyurethane Molythane (Black)	General purpose industrial poly-urethane offering high abrasion resistance	-65 to +200 (-54 to +93)	8134 (56.1)	565%	95	-	1755 (12.1)	30.8%	158 (70)	34%	9.4
P4617D65	Polyurethane Molythane (Black)	General purpose industrial poly-urethane offering high extrusion resistance.	-65 to +250 (-54 to +121)	5973 (41.2)	544%	-	62	3914 (26.9)	-	-	-	6.7
P4622A90	Polyurethane Ultrathane (Yellow)	Formulated with internal lubri-cants for lower friction to help reduce heat build up.	-65 to +225 (-54 to +107)	6757 (46.6)	466%	94	-	1755 (12.1)	31.0%	158 (70)	34%	7.6
P4500A90	Polyurethane (Light Green)	Offers good abrasion and extru-sion resistance with excellent rebound.	-65 to +200 (-54 to +93)	6740 (46.5)	586%	92	-	1774 (12.2)	32.9%	158 (70)	42%	7.6
P4700A90	Polyurethane (Green)	Enhanced properties over 4615 to improve sealing capabilities from lower compression set.	-65 to +200 (-54 to +93)	5660 (39.0)	511%	92	-	1665 (11.5)	24.7%	158 (70)	35%	6.3
P5065A88	Polyurethane (Dark Blue)	Formulated for an improved low temperature range and higher resilience than 4615.	-70 to +200 (57 to +93)	5033 (34.7)	660%	86	-	1073 (7.4)	27.2%	158 (70) (70)	50%	5.5
P6000A90	Polyurethane (Dark Gray)	Improved abrasion, extrusion and compression resistance as well as higher temp. than 4700.	-31 to +230 (-35 to +110)	6513 (44.9)	491%	93	-	1941 (13.4)	26.2%	158 (70)	44%	7.3
Thermoplastic Elastomers — TPCE, PolyMyte												
Z4651D60	PolyMyte (Orange)	Used in applications requiring extended extrusion resistance and fluid compatibility.	-65 to +275 (-54 to +135)	5748 (39.6)	775%	-	58	2231 (15.4)	43.0%	158 (70)	-	6.4
Z4652D65	PolyMyte (Orange)	Primarily used for back-up rings and other anti-extrusion devices.	-65 to +275 (-54 to +135)	6175 (42.6)	700%	-	62	2611 (18.0)	45.4%	158 (70)	-	6.9
Z4729D55	Hytrel (Tan)	Primarily used for back-up rings and other anti-extrusion devices.	-65 to +275 (-54 to +135)	5609 (38.7)	837%	-	56	2212 (15.2)	46.0%	158 (70)	-	6.9

09/01/07

Parker Hannifin Corporation
Engineered Polymer Systems Division
Phone: 801 972 3000

3

Table 3-2. Typical Physical Properties: Thermoplastics — Engineered Resins

Parker Material Code	Material	Color	Typical Applications & Description	Service Temperature Range °F (°C)	Tensile Strength at Break psi (MPa)	Flexural Strength Kpsi (MPa)
Nylons						
W4650	MolyGard	Gray	Heat stabilized, internally lubed 30% glass-reinforced nylon for standard tolerance wear rings.	-65 to +275 (-54 to +135)	17500 (121.0)	22600 (156.0)
W4655	Nylatron	Gray	Wear resistant nylon with molybdenum disulfide for lower friction, suited for back-up rings.	-65 to +275 (-54 to +135)	13000 (89.6)	16000 (110.3)
W4733	WearGard	Green	High compressive strength, 35% glass-reinforced nylon for tight tolerance wear rings.	-65 to +275 (-54 to +135)	18300 (126.0)	25500 (176.0)
UltraCOMP						
W4685	UltraCOMP HTP	Tan	A homogenous engineered thermoplastic used for extreme conditions in many markets.	-65 to +500 (-54 to +260)	14000 (97.0)	23600 (163.0)
W4686	UltraCOMP GF	Tan	30% glass filled engineered thermoplastic with enhanced compressive strength.	-65 to +500 (-54 to +260)	22600 (156.0)	30700 (212.0)
W4737	UltraCOMP CF	Black	30% carbon fiber blend, provides enhanced tensile and compressive strength.	-65 to +500 (-54 to +260)	32400 (224.0)	43200 (298.0)
W4738	UltraCOMP CGT	Gray	Thermoplastic material blended with carbon, glass and PTFE for reduced friction.	-65 to +500 (-54 to +260)	20400 (141.0)	26900 (186.0)
Composite Resins						
0871-0874	Composite Fabric-Reinforced Resins	Multiple	Fabric-reinforced resins to handle severe sideloads, high heat and swell from moisture.	-40 to +250 (-40 to +121)	9500 (65.5)	-

Parker Hannifin Corporation
Engineered Polymer Systems Division
Phone: 801 972 3000

Table 3-2. Typical Physical Properties: Thermoplastics — Engineered Resins (cont'd)

Parker Material Code	Rockwell Hardness		Notched IZOD Impact Strength Ft-Lbs/In.	Tensile Modulus Kpsi (MPa)	Shear Strength psi (MPa)	Flexural Modulus Kpsi (MPa)	Compressive Strength psi (MPa)	Permissible Compressive Load psi (MPa)	Water Absorption (24 Hour) %
	M	R							
Nylons									
W4650	77	114	1.37	952 (6.6)	9390 (65.0)	860 (5929.0)	21000 (145.0)	21700 (150.0)	0.80
W4655	-	119	1.69	536 (3.7)	9,500 (65.5)	406 (2.8)	12000 (82.7)	-	0.50
W4733	87	117	1.15	899 (6.2)	9820 (68.0)	1,100 (7584.0)	21500 (148.0)	21700 (150.0)	
UltraCOMP									
W4685	-	126	2	507 (3.5)	7687 (53.0)	579 (4.0)	17100 (118.0)	-	0.50
W4686	-	124	2	1653 (114.0)	14068 (97.0)	1334 (9.2)	31100 (215.0)	-	0.11
W4737	-	124	2	3234 (22.3)	12328 (85.0)	2697 (18.6)	34800 (240.0)	-	0.06
W4738	-	100	2	1464 (10.1)	-	1189 (8.2)	21700 (150.0)	-	0.06
Composite Resins									
0871-0874	100	-	10	470 (3.24)	-	280 (1.9)	35000 (241.3)	65200 (449.54)	0.10

Parker Hannifin Corporation
Engineered Polymer Systems Division
Phone: 801 972 3000

3

Table 3-3. Typical Physical Properties — Thermoset Elastomers

Parker Material Code	Material	Color	Typical Applications & Description	Service Temperature Range°F (°C)	Tensile Strength at Break psi (MPa)	Ultimate Elonga-tion	Shore A Hard-ness	100% Modulus psi (MPa)	Compression Set		Abrasion Rating (1) Worst to (10) Best
									Set	at°F (°C)	
Nitrile (NBR)											
N4115A75	Nitrile	Black	General purpose nitrile with medium ACN content for use where a softer seal is required.	-40 to +225 (-40 to +107)	2215 (15.3)	328%	74	641 (4.4)	23.6%	212 (100)	1.9
N4180A80	Nitrile	Black	General purpose nitrile with good chemical compatibility, seal ability and compression set.	-40 to +250 (-40 to +121)	2199 (15.2)	275%	80	1007 (6.9)	19.4%	302 (150)	1.9
N4181A80	Flocked Nitrile	Black	Fiber added reinforcement helps retain lubrication for reduced friction. Used in 8600 wipers.	-40 to +250 (-40 to +121)	2437 (16.8)	345%	80	663 (4.6)	19.4%	302 (150)	2.2
N4121A90	Nitrile	Black	High modulus for outstanding extrusion resistance plus good compression set.	-40 to +250 (-40 to +121)	2415 (16.7)	247%	89	1447 (9.9)	24.0%	212 (100)	2.2
N4008A80	Nitrile	Black	Premium, low ACN nitrile for use when low temperature sealability is required.	-70 to +275 (-57 to +135)	2141 (14.8)	177%	79	1031 (7.1)	26.4%	212 (100)	1.8
N0304A75	Nitrile	Black	Extended temperature range formulated for aerospace T-seal applications.	-65 to +275 (-54 to +135)	1790 (12.3)	213%	75	567 (3.9)	19.4%	212 (100)	1.4
Carboxylated Nitroxile (XNBR)											
N4257A85	Nitroxile	Black	XNBR with internal lubricant to reduce friction. Ideal for pneumatic applications.	0 to +250 (-18 to +121)	2845 (19.6)	249%	80	1223 (8.4)	20.0%	212 (100)	2.7
N4274A85	Nitroxile	Black	Premier XNBR in the industry formulated with proprietary internal lubricant.	-10 to +250 (-23 to +121)	3016 (20.8)	241%	83	1404 (9.7)	31.0%	212 (100)	2.9
N4263A90	Nitroxile	Black	Extra tough XNBR with increased hardness, modulus and tensile strength.	-20 to +275 (-29 to +135)	3103 (21.4)	117%	90	2902 (20.0)	26.4%	212 (100)	3
Hydrogenated Nitrile (HNBR)											
N4031A85 (KA183)	HNBR	Black	Equivalent to Seal Group compound KB183A85, offers low temperature improvement.	-40 to +320 (-40 to +160)	1800 (12.4)	100%	88	1500 (10.3)	25.0%	212 (100)	1.4
N4032A80 (KB162)	HNBR	Black	Equivalent to Seal Group compound KB162A80 offering improved chemical compatibility.	-25 to +320 (-32 to +160)	3335 (22.9)	164%	82	2358 (16.3)	23.0%	302 (150)	3.3
N4033A90 (KB163)	HNBR	Black	Equivalent to Seal Group compound KB163A90 offering improved chemical compatibility	-25 to +320 (-32 to +160)	3219 (22.2)	107%	88	3329 (22.9)	22.0%	302 (150)	3.2
N4007A90	HNBR	Black	Excellent extrusion resistance and explosive decompression to meet Norsok M-710	-20 to +320 (-29 to +160)	4698 (32.4)	207%	92	2006 (13.8)	14.9%	212 (100)	5.0

Parker Hannifin Corporation
Engineered Polymer Systems Division
Phone: 801 972 3000

Table 3-3. Typical Physical Properties — Thermoset Elastomers (cont'd)

Parker Material Code	Material	Color	Typical Applications & Description	Service Temperature Range°F (°C)	Tensile Strength at Break psi (MPa)	Ultimate Elonga-tion	Shore A Hard-ness	100% Modulus psi (MPa)	Compression Set		Abrasion Rating (1) Worst to (10) Best
									Set	at°F (°C)	
Ethylene Propylene (EPR)											
E4207A90	Ethylene Propyl-ene	Black	General purpose 90A EPR, has excellent dimensional stability in water-based fluids and steam.	-65 to +300 (-54 to +149)	2285 (15.8)	135%	87	1453 (10.0)	13.0%	257 (125)	2.0
E4259A80	Ethylene Propyl-ene	Black	General purpose 80A EPR, has excellent dimensional stability in water-based fluids and steam.	-65 to +300 (-54 to +149)	2142 (14.8)	162%	79	1057 (7.3)	12.8%	257 (125)	1.8
E4270A90	Ethylene Propyl-ene	Black	Formulated for geothermal environments and steam up to +600°F.	-65 to +400 (-54 to +204)	3047 (21.0)	145%	89	1800 (12.4)	27.1%	302 (150)	3.0
Fluorocarbon Elastomers (FKM)											
V1289A75	Fluoro-elasto-mer	Black	Fluorocarbon material formulated for improved low temperature applications.	-40 to +400 (-40 to +204)	1497 (10.3)	163%	78	920 (6.3)	17.0%	392 (200)	1.0
V4205A75	Fluoro-elasto-mer	Black	70 Shore A general purpose fluorocarbon resistant to chemi-cal attack and heat.	-20 to +400 (-29 to +204)	2161 (14.9)	202%	76	803 (5.5)	6.5%	302 (150)	1.8
V4208A90	Fluoro-elasto-mer	Black	90 Shore A general purpose fluorocarbon resistant to chemi-cal attack and heat.	-5 to +400 (-21 to +204)	1954 (13.5)	152%	90	1327 (9.2)	13.4%	302 (150)	1.6
V4266A95	Fluoro-elasto-mer	Black	Features extended wear and extrusion resistance over gen-eral purpose fluorocarbons.	-5 to +400 (-21 to +204)	2442 (16.8)	102%	92	2210 (15.2)	17.6%	302 (150)	2.2

Parker Hannifin Corporation
Engineered Polymer Systems Division
Phone: 801 972 3000

3

Table 3-4. Typical Physical Properties — PTFE

Parker Material Code	Material	Color	Typical Applications & Description	Service Temperature Range °F (°C)	Tensile Strength in psi at Break (bar)	Elongation in %	Hardness Shore D
Non-Filled PTFE							
0100	Virgin PTFE	White	Excellent for cryogenic applications. Good for gases.	-425 to 450 (-254 to 233)	4575 (316)	400	60
Filled PTFE							
0102	Modified PTFE	Turquoise	Lower creep, reduced permeability and good wear resistance.	-320 to 450 (-195 to 282)	4600 (317)	390	60
0120	Mineral Filled PTFE	White	Excellent low abrasion to soft surfaces & improved upper temperature performances. FDA materials.	-360 to 550 (-218 to 288)	4070 (281)	270	65
0203	Fiberglass Filled PTFE	Gold	Excellent compressive strength and good wear resistance.	-200 to 575 (-129 to 302)	3480 (240)	190	67
0204	Fiberglass & Moly Filled PTFE	Gray	Excellent for extreme conditions such as high pressure , temperature and longer wear life on hardened dynamic surfaces.	-200 to 575 (-129 to 302)	3100 (214)	245	62
0205	Fiberglass & Moly Filled PTFE	Gray	Improved compressive strength and wear in rotary applications	-200 to 575 (-129 to 302)	3480 (240)	190	67
0301	Graphite Filled PTFE	Black	Excellent for corrosive service. Low abrasion to soft shafts. Good in unlubricated service.	-250 to 550 (-157 to 288)	3200 (221)	260	60
0307	Carbon-Graphite Filled PTFE	Black	Excellent wear resistance and reduces creep.	-360 to 575 (-218 to 302)	2250 (155)	100	64
0401	Bronze Filled PTFE	Bronze	Excellent extrusion resistance and high compressive loads.	-200 to 575 (-129 to 302)	3200 (221)	250	63
0502	Carbon Fiber Filled PTFE	Brown	Good for strong alkali and hydrofluoric acid. Good in water service.	-200 to 550 (-129 to 288)	3200 (221)	312	60
0601	Aromatic Polyester Filled PTFE	Tan	Excellent high temperature capabilities and excellent wear resistance.	-200 to 575 (-129 to 302)	2500 (172)	200	61

Parker Hannifin Corporation
Engineered Polymer Systems Division
Phone: 801 972 3000

Table 3-4. Typical Physical Properties — PTFE (cont'd)

Parker Material Code	Coefficient of Friction	Thermal Conductivity (in W/mK)	Coefficient of Thermal Expansion (in/in/°F x 10^{-5} at 203°F)	Permanent Deformation Under Load (70°F 2000 psi in %)	Chemical Compatibility Rating	Wear Resistance Rating	High Pressure Extrusion Resistance Rating	FDA/NSF Compliant
					5 = Excellent 1 = Fair			
Non-Filled PTFE								
0100	0.05 - 0.10	0.30	11	7.0	5	1	1	Y
Filled PTFE								
0102	0.05 - 0.10	0.29	11	6.9	5	2	2	Y
0120	0.08 - 0.12	0.23	11	4.2	5	3	4	Y
0203	0.08 - 0.12	0.27	10	6.0	5	5	5	N
0204	0.08 - 0.12	0.28	11	6.0	5	4	4	N
0205	0.08 - 0.12	0.27	10	6.0	5	5	5	N
0301	0.07 - 0.09	0.39	11	3.5	5	4	3	N
0307	0.08 - 0.11	0.35	8	2.5	5	4	4	N
0401	0.18 - 0.22	0.45	10	4.4	4	4	4	N
0502	0.09 - 0.12	0.31	13	1.8	4	5	5	N
0601	0.09 - 0.13	0.32	9	5.5	4	4	4	N

Note: We emphasize that this tabulation should be used as a guide only.

The above data is based primarily on laboratory and service tests, but does not take into account all variables that can be encountered in actual use. Therefore, it is always advisable to test the material under actual service conditions before specifying. If this is not practical, tests should be devised that simulate service conditions as closely as possible.

Parker also offers unique material blends and recipes along with a wide variety of other PTFE filler combinations and colors to enhance seal performance in the most extreme application needs. For guidance on material selection for extreme applications, please contact Application Engineering at 801-972-3000.

09/01/07

Parker Hannifin Corporation
Engineered Polymer Systems Division
Phone: 801 972 3000

The following table lists material codes that apply to the rubber energizer used with PTFE fluid power seals. List the corresponding material code in the appropriate location in the part number. Parker has a full range of rubber compounds to suit various temperature, pressure and chemical compatibility requirements. If your application requires an alternate rubber compound, not listed, please consult a Parker application engineer.

Table 3-5. Typical Application Ranges & Recommendations — Rubber Energizers for PTFE fluid power seals

Material Code	Material Description	Shore A Hardness	Temperature Range	Recommended Use	Not Recommend For Use
A	Nitrile (NBR)	70	-30°F to 250°F (-34°C to 121°C)	• Petroleum oils and fluids • Diesel fuel and fuel oils • Cold water • Silicone oil and grease • Mineral oil and grease • Vegetable oil • HFA, HFB and HFC fluids	• Aromatic hydrocarbons • Chlorinated hydrocarbons • Polar solvents (MEK, ketone, acetone) • Phosphate ester fluids • Strong acids • Automotive brake fluid
B	Low Temperature Nitrile (NBR)	75	-65°F to 225°F (-55°C to 107°C)		
C	Clean Grade Nitrile (NBR)	70	-30°F to 250°F (-34°C to 121°C)	• Potable water • Food service	
D	Hydrogenated Nitrile (HNBR)	70	-23°F to 300°F (-32°C to 149°C)	• Diesel fuel and fuel oils • Dilute acids and bases	
F	Fluorocarbon (FKM)	70	-15°F to 400°F (-26°C to 205°C)	• Petroleum oils and fluids • Cold water • Silicone greases and oils • Aliphatic hydrocarbons • Aromatic hydrocarbons • Fuels • Fuels with methanol content	• Glycol based brake fluids • Ammonia gas, amines, alkalis • Superheated steam • Low molecular organic acids
H	Silicone HT (VMQ)	70	-65°F to 450°F (-55°C to 232°C)	• Engine and transmission oil • Animal and vegetable oil and grease • Brake fluid • Fire-resistant hydraulic fluid • Ozone, aging and weather resistant	• Superheated steam • Acids and Alkalis • Aromatic mineral oil • Hydrocarbon-based fuels • Aromatic hydrocarbons
K	Ethylene Propylene Rubber (EPDM)	70	-70°F to 250°F (-57°C to 121°C)	• Hot water • Glycol based brake fluids • Many organic and inorganic acids • Cleaning agents • Soda and potassium alkalis • Phosphate ester based fluids • Many polar solvents	• Petroleum oils and fluids • Mineral oil products
L	Ethylene Propylene Rubber (EPDM)	80	-70°F to 250°F (-57°C to 121°C)		

The following table is a list of back up ring materials for use with PTFE fluid power seals. List the corresponding back up ring material code in the appropriate location in the part number.

Table 3-6. Typical Application Ranges & Recommendations — Back-up rings for PTFE fluid power seals

Material Code	Material Description	Pressure Rating *	Temperature Range	Recommended Use
A	Nylon, Molybdenum Di-Sulfide Filled	7,500 psi (517 bar)	-40°F to 250°F (-40°C to 121°C)	• Petroleum oils and fluids • Diesel fuel and fuel oils • Phosphate ester fluids • Silicone oil and grease • Mineral oil and grease
B	Nylon Glass Filled	7,500 psi (517 bar)	-40°F to 275°F (-40°C to 135°C)	• Reduced water absorption • Improved thermal stability
C	Acetal	6,000 psi (414 bar)	-40°F to 250°F (-40°C to 121°C)	• HFA, HFB and HFC fluids • Water • Petroleum oils and fluids • Diesel fuel and fuel oils • Mineral oil and grease
D	PTFE PPS Filled	5000 psi (345 bar)	-100°F to 450°F (-73°C to 232°C)	• Extended temperature, pressure and media resistance
E	PEEK Virgin	10,000 psi (690 bar)	-40°F to 450°F (-40°C to 232°C)	• Extended temperature, pressure and media resistance

* Pressure ratings are a general guide only. Pressure ratings are reduced if wear rings are used.

Table 3-7. Standard (■) vs. Optional (□) materials for PTFE fluid power seal profiles

PTFE Material Code	PTFE Fluid Power Seal Profile													
	S5	R5	CT	CQ	OE	CP	OA	OD	ON	CR	OC	AD	OQ	OR
0100						□				□		□		
0102						□	■	□		□	■			
0120	□	□			□	□		□	□	□			□	□
0203	■	■		□	□				□					
0204			□				□				□		□	□
0205													■	■
0301					□				□				□	□
0307			□		□			□	□				□	□
0401	□	□	■	■	■	■		■	■	■	□	■		
0502												□	□	□
0601					□				□					

09/01/07

Parker Hannifin Corporation
Engineered Polymer Systems Division
Phone: 801 972 3000
www.parkerseals.com

Chemical Compatibility

It is essential to select seal compounds that are compatible with the environment in which they are used. Even if the proper seal material is chosen based on system temperature and pressure, exposure to certain fluids can drastically reduce seal performance by altering a compound's typical physical properties.

Parker has tested thousands of fluids and is continuously testing many new, popular chemicals to ensure seal material compatibility. Appendix D shows the results of many common seal materials in popular test fluids. This information compares the changes in physical properties of each seal material after it has been soaked in a specific fluid for a given temperature and time. For additional compatibility reports not shown, please contact your local Parker representative.

Temperature Limits

When selecting a seal material, temperature is a key factor. Heat affects the seal material in several ways:

- Softens the material which accelerates wear
- Accelerates any chemical reaction between the fluid and the seal
- Damages the bond structure of the material
- Increases compression set
- Higher temperatures for extended periods of time may harden thermoset (rubber) materials

Lower end temperature may be as important as the upper end temperature. This is especially true in mobile hydraulics. As the temperature lowers, the following takes place:

- The seal hardens and is less responsive.
- The coefficient of thermal expansion and contraction is approximately ten times that of metals. Therefore the seal lips could start to pull away from the surface of the bore. This loss of lip compression against the colder sealing surfaces can be offset by seal design and proper material selection.
- The opposite is also true. As a bearing or wear ring heats up, binding can occur if there is not a gap designed into the wear ring.

Storage and Handling

In 1998, the Society of Automotive Engineers (SAE) issued an Aerospace Recommended Practice (ARP) for the storage of elastomer seals and seal assemblies prior to installation. ARP 5316 has been considered by many as the industry standard; however, Parker has taken a conservative approach to ensure to our customers the highest quality. Both the ARP 5316 and Parker standards for shelf life are shown below in Table 3-8.

Table 3-8. Recommended storage standards

Chemical Name	Polymer	ARP 5316	Parker
Aflas®	FEPM	Unlimited	7 Years
Ethylene Propylene	EP, EPR, EPDM	Unlimited	7 Years
Fluorocarbon	FKM	Unlimited	7 Years
Nitrile	NBR, HNBR, XNBR	15 Years	7 Years
Polyurethane	AU or EU	-	10 Years
PolyMyte	TPCE	-	10 Years
Polytetra-fluoroethylene	PTFE	-	Unlimited

The values above assume that proper guidelines for storage conditions are followed. If plastic and rubber products are stored improperly, their physical properties may change. Prior to use, all parts should be checked for hardness, surface cracking or peeling. If any of these conditions are observed, the parts should be discarded. Some compounds can exhibit a build-up of powdery film on their surface over time. This natural occurrence is referred to as bloom and does not in any way negatively impact the function of the seal. Guidelines for proper seal storage are shown in Table 3-9, page 3-21.

Table 3-9. Seal storage & handling guidelines

Seal Storage & Handling Guidelines	
Records	Records should be kept to ensure that stock is rotated such that the first seals in are the first out (FIFO).
Temperature	Seals must be stored away from heat sources such as direct sunlight and heating appliances. Maximum storage temperature is 100°F (38°C). Low temperatures do not typically cause permanent damage to seals, but can result in brittleness, making them susceptible to damage if not handled carefully. Ideally, seals should not be stored at temperatures less than 50°F (10°C) and should be warmed to room temperature before installation.
Ultra Violet	Seal must be protected from direct sunlight and any artificial light that generates ultra violet radiation.
Humidity	Care should be taken to ensure seals are always stored in an environment with a relative humidity of less than 65%. Polyurethane seals in particular are very susceptible to damage from exposure to moisture and should be stored in air-tight containers.
Oxygen and Ozone	Ozone-generating equipment and oxygen exposure can be detrimental to seal compounds. Seals should be stored in air-tight containers. Any electrical equipment that generates a spark should not be used near seal storage.
Contamination	Keeping seals free from contamination will assist promote service life. Good housekeeping practices should be maintained.
Distortion	Large seals should be stored flat when possible and not suspended, which may cause distortion over time. Do not store seals on hooks, nails or pegboard.

Parker Hannifin Corporation
Engineered Polymer Systems Division
Phone: 801 972 3000

Notes

Parker Hannifin Corporation
Engineered Polymer Systems Division
Phone: 801 972 3000

Applications

Contents

Fluid Power Applications 4-1
Single Acting Hyd. Ram 4-2
Single Acting Pneu. Cyl. 4-3
Double Acting Cylinder 4-3
Telescoping Cylinder 4-4
Cushioned Double Acting Cyl. 4-5
Dual-Fluid Power Cylinder 4-5
Ram Pressure Intensifier 4-6
Double Acting Intensifier 4-7
Piston-Type Accumulator 4-7
Energy Absorbing Cylinder 4-8
High Shock Cylinder 4-8
Linear-to-Rotary Converter 4-9
Cartridge Valve 4-10
Spool Valve 4-11
Piston Pump 4-11
Diaphragm Pump 4-11

Fluid Power Applications

When selecting a sealing system for a fluid power application it can be helpful to review sealing components used in similar products. While there are numerous designs of fluid power devices, many share similar characteristics based upon their dynamic motion and function. The following section provides a general overview of common fluid power products along with a description of the sealing systems that are typically used. Despite their considerable variety, reciprocating and oscillating fluid power products fall into relatively few categories. These include:

Power Cylinders	Single-Acting Hydraulic (RAM) Single-Acting Pneumatic Double-Acting Telescoping Cushioned Dual Fluid
Pumping Cylinders	Pressure Intensifier Single Acting Double-Acting
Accumulators	Piston Type
Specialty Cylinders	Energy Absorbing Linear / Rotary Converter
Valves	Cartridge Spool
Pumps	Piston Diaphragm

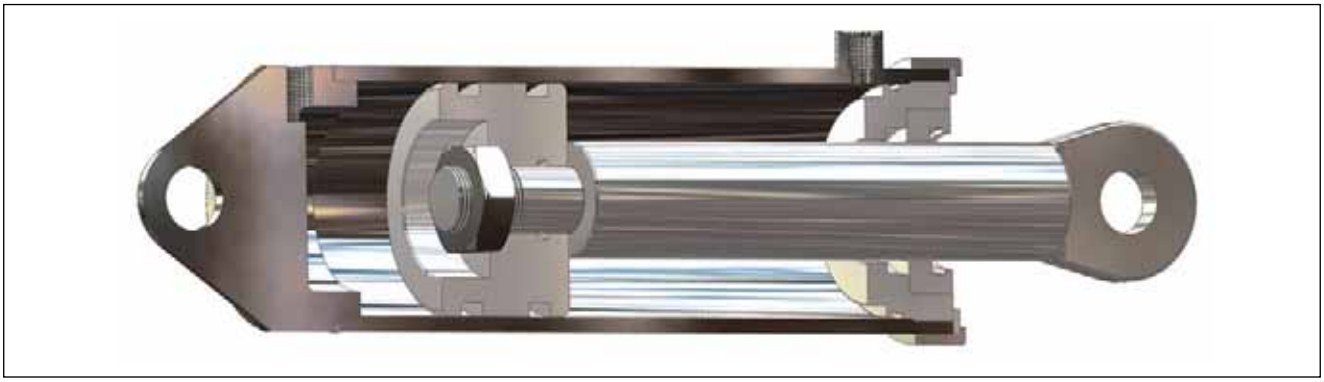

Figure 4-1. Typical Hydraulic Cylinder

Parker Hannifin Corporation
Engineered Polymer Systems Division
Phone: 801 972 3000

Single Acting Hydraulic Ram Concept

Hydraulic rams are single-acting power cylinders that do not utilize a conventional piston. Instead, fluid pressure is applied to the end of the rod (ram) to create force for extension and either gravity or an external force is applied for retraction. The principal appeal of this design is its low manufacturing cost for large sized rams. Lower manufacturing costs are attributed to the fact that the cylinder bore does not require a close tolerance or a smooth surface finish. Only the ram itself needs to be ground and polished. Clearances are only important between the ram O.D. and gland I.D.

Rams that are retracted by gravity alone, customarily use low-friction lip-type seals, such as u-cups or squeeze seals made from PTFE. Low-pressure sealing problems, characteristic of lip-type seals, are seldom significant as the throttled exhaust creates back pressure to energize the seal. Hydraulic rams installed in an upward vertical orientation collect contamination around the rod seal housing. To prevent contamination from entering the cylinder, snap-in wipers are recommended. Wear rings or bearings are frequently required to prevent contact between polished rams and gland housings. Never rely on seals or wipers to provide lateral support.

If the ram is downward-acting, a spring or external retraction cylinder is used to return the ram into the cylinder. Normally, retraction cylinders are single-acting and apply no force to the load. They can, however, be double-acting and add their force to that of the ram. In many applications, the ram is powered hydraulically, while the retraction cylinders are fast-acting pneumatic units.

Externally retracted rams have more latitude in seal selection since the return force can overcome the extra friction of squeeze-type seals. Downward-acting rams typically have low pressure return strokes which may produce leakage if lip type seals are used. Pressures are usually low during the down stroke until the ram contacts the load.

Figure 4-2. Single Acting Hydraulic Ram

Parker Hannifin Corporation
Engineered Polymer Systems Division
Phone: 801 972 3000

Single Acting Pneumatic Cylinder

Single-acting cylinders, as in the case of hydraulic rams, rely on mechanical means to retract or extend the rod. The cylinder shown is a typical pneumatic design, using an internal spring to extend the rod and air pressure to retract. The spring and pressure port arrangement could be reversed to provide power extension and spring retraction. The piston seal is typically a rubber u-cup profile. To maintain pre-lubricated surfaces a rounded lip profile can be selected for sealing the piston, and the rod if required.

To reduce cost, o-rings are sometimes considered for pneumatic applications. This can be problematic since o-rings will wipe away pre-lubrication and are prone to instability, spiral failure, high friction, and rapid wear. Selecting u-cup seals will eliminate these problems.

Snap-in wipers are typically used to prevent contamination from entering the cylinder. These can be either polyurethane or rubber depending on the environment. Bearings for these types of cylinders typically do not see heavy side loads. Filled PTFE wear rings or strips are an excellent choice to ensure low friction performance.

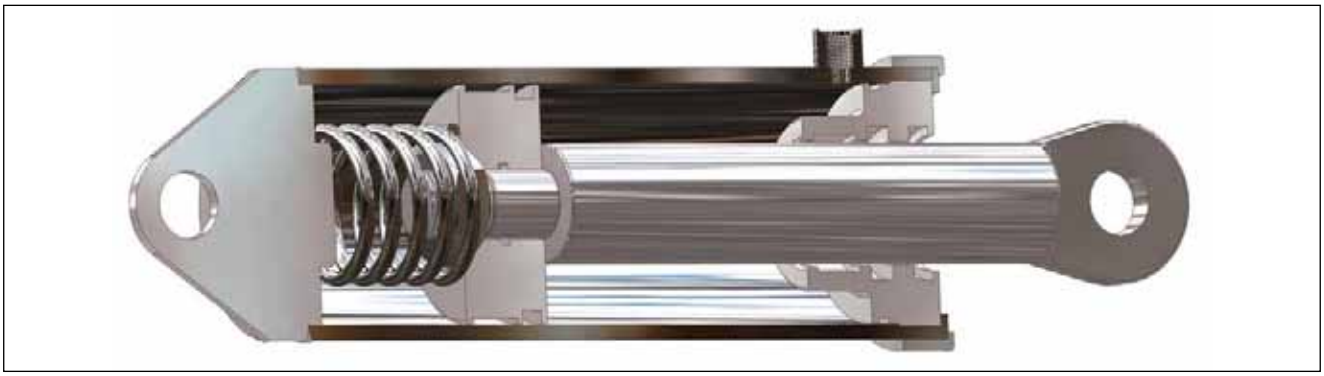

Figure 4-3. Single Acting Pneumatic Cylinder

Double Acting Power Cylinder

In double acting cylinders fluid pressure is applied to either side of a piston to extend or retract the rod. This is typical of many fluid power cylinders used for hydraulic or pneumatic service at low to high pressures. As shown in Figure 4-4, seals are required for both the piston and rod glands. Clevis mountings at each end of the cylinder permit alignment with external linkages without bending the rod.

There are many options available to seal double-acting cylinders. Dual grooves shown in the piston are designed for a pair of uni-directional (single-acting) seals installed “back-to-back” such that their sealing lips face away from one another. This orientation allows any fluid that passes by the pressurized seal to easily leak past the unpressurized seal, thus preventing pressure trapping. Never install seals back-to-back with their sealing lips facing one another. This orientation will leak fluid into the space between the seals and pressure trapping will occur. Do not install dual seals in the same groove. The unpressurized seal will not support the pressurized seal resulting in instability and extrusion damage.

The other option to seal the piston is to install a bi-directional seal into a single groove. A single

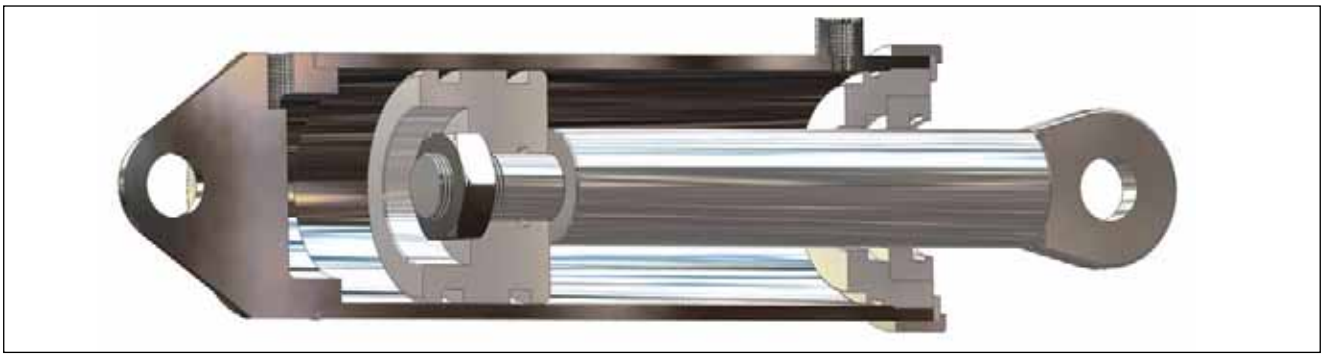

Figure 4-4. Double Acting Power Cylinder

Parker Hannifin Corporation
Engineered Polymer Systems Division
Phone: 801 972 3000

bi-directional seal eliminates installation confusion and the possibility of pressure trapping. Selecting a bi-directional seal allows more room on the piston for a wear ring to protect against piston and bore contact. Typically, the wear ring is located on the end cap side of the piston to maximize distance between piston and rod bearing surfaces.

In low to medium-pressure cylinders anti-extrusion back-up rings are not normally required. High pressure may cause the cylinder to expand (breath) allowing the seals to extrude into the clearance gap between the piston and the bore. This may also occur at lower pressures in thin-wall, lightweight cylinders. To protect the seals, back up rings are recommended.

Rod seals may be either uni- or bi-directional, squeeze- or lip-type, depending on the application. As pressure requirements increase, and/or stroke and cycle rates increase, the use of multiple profile sealing systems (buffer and rod seal) are recommended. Rod wipers should be selected to match the application. Moving from snap-in wiper profiles to press fit profiles increases contamination protection. The wiper gland, shown in Figure 4-4, makes it easy to remove and inspect or replace the rod seal. To protect the seals from side loading, the internal side of the rod seal housing can be extended to make room for rod wear rings. Normally such side load forces should be avoided due to their tendency to bend the rod, accelerate wear, and restrict freedom of motion.

Telescoping Power Cylinder

Telescoping cylinders are usually single-acting cylinders which require an external force, such as gravity or a connected load, for retraction. Through a series of staged extensions this cylinder type provides a long stroke from a much shorter retracted length. They are used extensively to raise hinged beams or booms and dump truck bodies.

When a telescopic cylinder begins to extend, for most designs, the largest-diameter tube will move first at low speed, and the smallest tube will extend last at a higher speed. Control of input flow can regulate extension speed for more uniformity, which may be helpful when acceleration could cause instability in the connected load. It is also characteristic that the cylinder force diminishes as each successive tube reaches the end of its stroke. These force variations must be considered when matching the cylinder to the application.

The telescoping design shown in Figure 4-5 utilizes an internal collar to hold the seal and an external collar to hold the wiper. As each stage extends the internal collar bottoms out against the external collar. This prevents overextension of the tubes. Both collars are designed to also act as bearings. Since such cylinders usually control retraction speed by throttling the exhaust fluid, low-pressure leakage may be minimized enough to permit the use of lip-type seals with virtually no loss of fluid.

The design shown utilizes the inside diameter of each tube as a sealing surface and is never exposed directly to outside contamination. A piston-type profile is required to seal against the tube I.D. Wiper rings become extremely important in telescoping cylinders because so much surface area is exposed to contamination. If the wipers are properly maintained, external contamination will be kept away from the sealing surfaces indefinitely.

Figure 4-5 shows collars made of bearing metals which would be compatible with the tubing metal. Grooves to hold wear rings can also be designed into the collars. In rod type telescoping cylinders where O.D. sealing is employed, it is simpler to maintain lubrication of these bearing surfaces since both seal and wiper ring would be located in the outboard collar, and the bearings could be immersed permanently in the fluid.

Figure 4-5. Telescoping Power Cylinder

Cushioned Double Acting Cylinder

Cushioned cylinders provide a means of decelerating the piston during the last part of its stroke. This prevents hard impacts which could be destructive to the cylinder and the connected load. While this feature may be provided in many ways, a common design uses a deceleration cavity through which the fluid exhausts during retraction and extension. To reduce fluid flow a rod extension (end cap side of piston) and enlarged rod (spud) are added to obstruct the exhaust cavity at each end of the stroke. In the design shown, the remaining exhaust is forced through a metering valve which can be adjusted for the desired deceleration. When flow is reversed, check valves in each end of the cylinder by-pass the obstructed flow, permitting rapid acceleration. This is further improved when the rod extension or spud clears the port.

To further control the cushioning effect, uniquely designed cushion seals can be incorporated to prevent flow between the rod extension or spud and the deceleration cavity. These cushion seals are highly effective in pneumatic cylinders but are not recommended in most hydraulic cylinders due to extrusion and spiral failure. Pneumatic cushion seals are uni-directional, designed with a series of slots and pedestals to allow gas to easily flow back into the cylinder. Cushion seals eliminate the need for check valves in pneumatic cylinders.

As for other areas of the cylinder that require dynamic seals, they would be selected based on the application parameters. Seals, wipers and wear rings for the piston and rod follow the guidelines described for dual acting cylinders.

Dual-Fluid Power Cylinder

In some applications it is desirable to utilize one fluid (such as compressed air) to drive a cylinder, along with a second fluid (hydraulic fluid) to regulate the cylinder speed. Being virtually incompressible, hydraulic fluid makes a better regulating fluid than compressible gas. The basic design in Figure 4-7 shows a cylinder in which the rod end is pneumatically driven, and the blind end is hydraulically restrained and regulated. A metering or throttling valve may be adjusted to control the retraction speed. If the hydraulic fluid is transferred into a low-volume accumulator with a captive volume of pressurizing gas, travel will slow down as the reservoir fills and back-pressure builds. If the accumulator is large in relation to the cylinder volume, stroke speed can be held nearly constant for the full travel.

The bi-directional throttling valve shown provides a slow return stroke as well as a regulated power stroke. If fast return is desired, a check valve provision such as that in Figure 4-6 (cushioned cylinder) would by-pass the throttling valve. Another frequent strategy is to use un-metered heads on the cylinder, and provide speed control by means of an external needle valve. If fast return is desired, an external check valve connected to by-pass the throttle can be utilized.

While some lubrication assistance is provided by the hydraulic fluid, it is not prudent to rely on it for the total lubrication of the pneumatic end of the cylinder. If long seal life is required, internally lubricated compounds are recommended.

To create a gas spring or dampening effect, it is possible to reverse the ends of the cylinder to apply

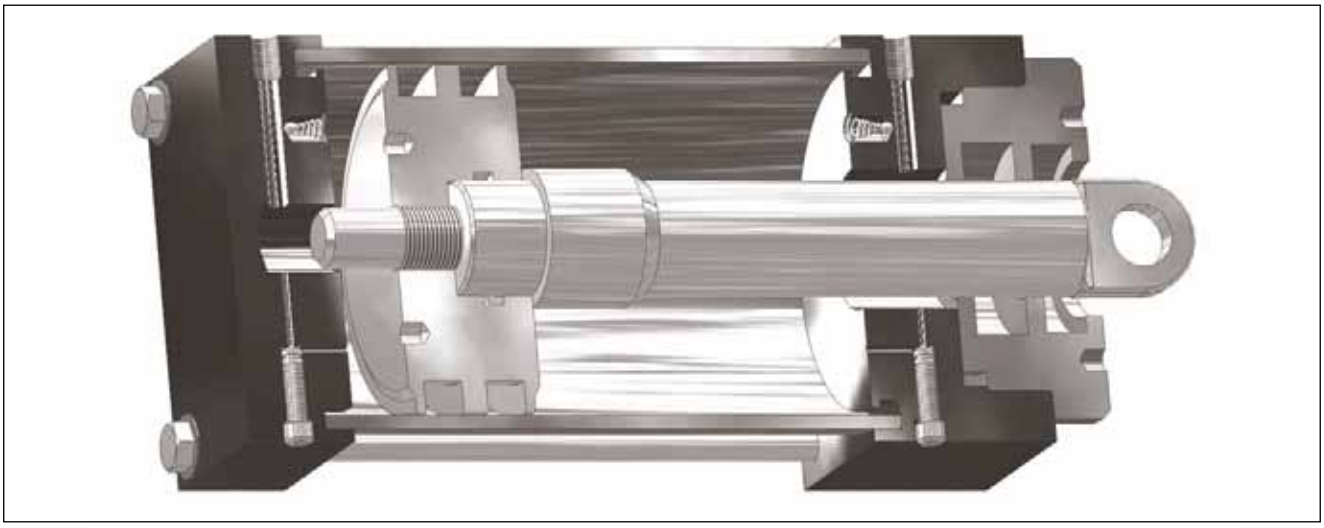

Figure 4-6. Cushioned Double Acting Cylinder

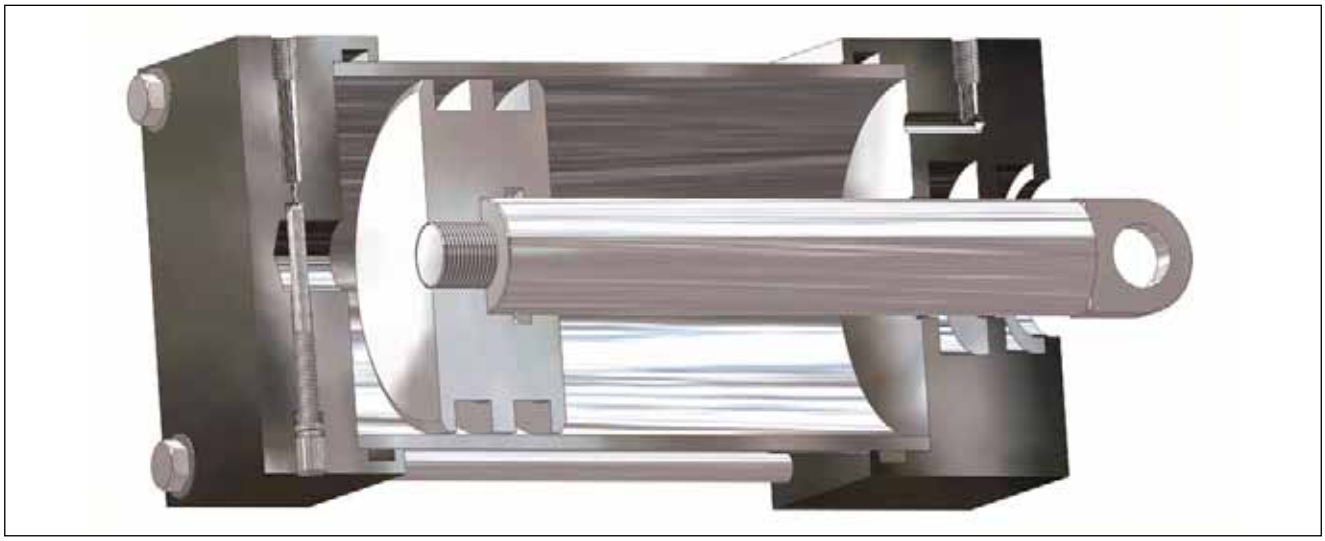

Figure 4-7. Dual-Fluid Power Cylinder

pneumatic pressure to the blind end, achieving a larger net area and consequently higher force while making it a "push" cylinder. With hydraulic fluid at the rod end, the rod seals are constantly lubricated. Also, since the hydraulic fluid is continuously under pressure, it is possible to use lip-type seals with negligible low-pressure sealing problems.

Ram-Type Pressure Intensifier

Pressure intensifiers utilize the area ratio between the power piston and the ram as a means to multiply output fluid pressure. Inversely, the volume of the output fluid is reduced by the same ratio. Numerous pressure intensifier designs have been mass-produced. The great majority are of the ram type, similar to that in Figure 4-8. They may be powered by the same fluid as that being boosted to a higher pressure, or by a different fluid. Typical examples include combinations of air, water, steam and oil.

In the design shown, a double-acting power cylinder provides both the pumping and suction stroke to a ram, which is isolated from the primary fluid by multiple seals. Where very high pressures are created, it may be desirable to add an intermediate-pressure fluid, with good lubricating properties, between the primary and secondary fluid seals. This decreases the pressure drop across the seals to help reduce extrusion, wear and leakage.

To ensure extrusion resistance, care should be taken when selecting seals for the intensified fluid. It may be necessary to include an anti-extrusion device to protect the high pressure seal from extrusion.

Figure 4-8. Ram-Type Pressure Intensifier

Double Acting Annulus-Type Pressure Intensifier

A popular design for pressure intensifiers is the annulus-type, which utilizes an enlarged rod diameter to provide differing piston effective areas on opposite piston faces. The net effective area on the rod side equals the full piston area minus the rod area. The ratio of the full piston area to the net area of the rod side establishes the intensification ratio.

A significant difference exists between this design and the ram-type intensifiers previously discussed. The pressure direction across the piston seals is reversed. Note that the lower fluid pressure acts on the larger piston face and the intensified pressure is on the inboard annular face. This means that the seals, if uni-directional, must be oriented with their sealing lips facing inboard. It also means that if the seals are installed in piston grooves, the direction of seal drag will encourage extrusion by adding to the intensified pressure. By installing the piston seals in wall grooves, as shown, friction is subtracted from the pressure forces, thereby minimizing the extrusion tendency. By the same logic, if the seals for the rod are installed in wall grooves, the direction of seal drag along with pressure act together to increase the extrusion tendency.

If the intensification chamber (the annular volume) is recharged by fluid under pressure, the double acting version shown will produce higher intensified pressure. This is achieved by adding the force developed in the annulus. The intensified output pressure would be:

$$\text{Output Pressure} = \frac{Aa + Ap \times Pp}{Aa}$$

If the annulus is recharged by a fluid at a different pressure than that of the power fluid (Pp), the intensified output pressure would be:

$$\text{Output Pressure} = \frac{(Aa\ Pp + Ap\ Pp)}{Aa}$$

In these equations:
- Aa = Annulus Area
- Ap = Piston Area
- Pa = Recharging Pressure
- Pp = Power Fluid Supply Pressure

As with the ram-type intensifiers, it is often preferred to mount this type vertically to minimize side loads, thereby reducing the size of the bearings.

When the annulus is recharged under pressure (i.e., not by a suction stroke), the piston seals may be lip style with their bases outboard and their sealing face toward the annular volumes. This is possible because pressure in the annulus will always exceed that in the piston area. For the grooved rod, a bi-directional seal may be the better choice, since the pressure directions alternate and considerably more space would be required for a pair of uni-directional seals in separate grooves.

Piston-Type Accumulator

In a fluid power system, piston-type accumulators are used to store pressurized fluid for use when additional fluid volume is required. As shown in Figure 4-9, a wide floating piston separates a compressible gas from a liquid. In this example, pressurized gas is located on the cavity side of the piston. A floating piston also allows for pressure fluctuation in the system.

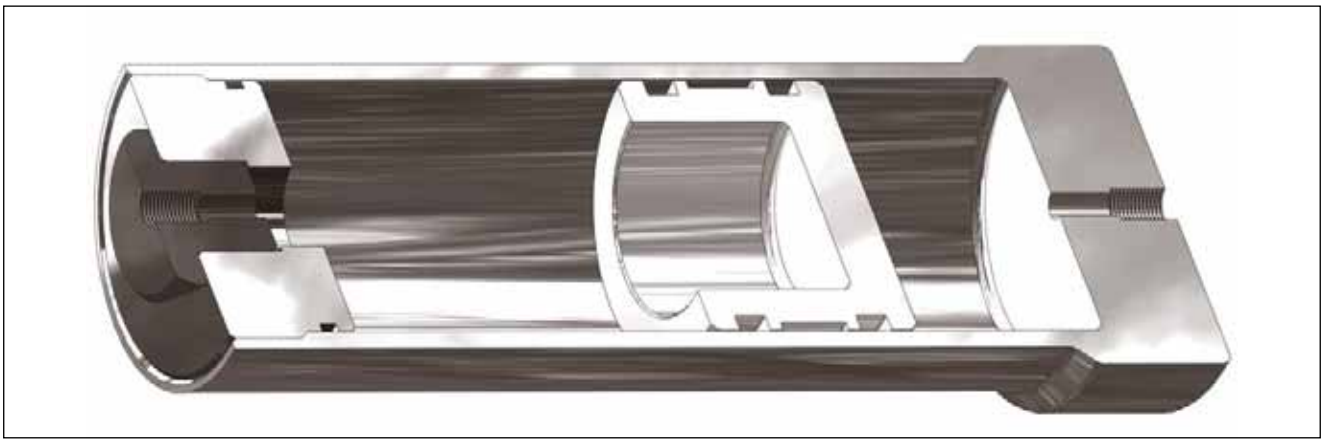

Figure 4-9. Double Acting Piston-Type Accumulator

Piston-type accumulators are unique in that there is very little pressure drop across their seals, even though the system pressure may be very high. Actually, the principal source of pressure drop across the seal is the friction between the seal and the cylinder (plus bearing friction, where used) until the piston reaches the end of its travel. Designing the system so that there is insufficient fluid to top out the piston is a simple method of preventing high pressures across the seals.

Low friction is not necessarily a design objective in selecting a seal. Squeeze seals, which offer improved low pressure sealing, are desired so long as they provide smooth travel with low wear. If a bi-directional seal is used, additional space is made available for a wider wear ring. The wear ring should be located on the lubricated side of the piston. To help prevent contamination that can damage the seals or increase wear, accumulators should be mounted in the vertical position.

Energy Absorbing Cylinder

Concentric double walls provide both the transfer channel and space for gas “spring” to accommodate the differential volumes in opposite ends of this energy absorbing design. When a moving mass engages the large rod, it drives the piston against the coil spring. Displaced hydraulic fluid passes through the fixed orifices, through the annular channel, and into the volume on the opposite side of the piston. As the piston covers the orifice ports, flow becomes progressively restricted near the end of the stroke. When the last port is covered, the only exit from the pressurized end is though the small clearance gap between the piston and the cylinder, which provides effective final dampening action. Since the rod diameters in the opposite ends of the cylinder are different, the change in volume on the opposite sides of the piston is not directly proportional (that is, more fluid is displaced than there is room for on the receiving side). This difference is absorbed by the volume of gas trapped in the top of the annular space.

Some versions of this design utilize a piston seal facing the spring-end of the cylinder, but the shock loading on impact can twist the seal in its groove and set up a high-probability extrusion situation. Where severe impacts are anticipated, choose seals for their high stability and ensure the seal does not travel over the orifice ports.

The return stroke is usually provided by the compressed spring alone. In this design, the return stroke will be slow since the flow must pass through the same fixed orifices in the reverse direction with only the spring energy to drive it. In other designs, the load may also power the return stroke.

High Shock Energy Absorbing Cylinder

Where it is possible to use an external hydraulic accumulator or connect into a hydraulic system with its own accumulator, a ram-type, energy absorbing cylinder may be safer and easier to regulate than the previous design (shown in Figure 4-10). This design utilizes a snug-fitting ram to isolate the rod seal from shock pressures developed on the ram face. Note that any leakage past the snug-fitting ram will bleed off through the oil return passage with fluid from the orifice plugs. As shown in Figure 4-11, only a single rod seal is required. A wide variety of rod seals could be used in this application with the principal deciding factors being the pressure range of the connected hydraulic accumulator, and the friction at the rod and seal interface.

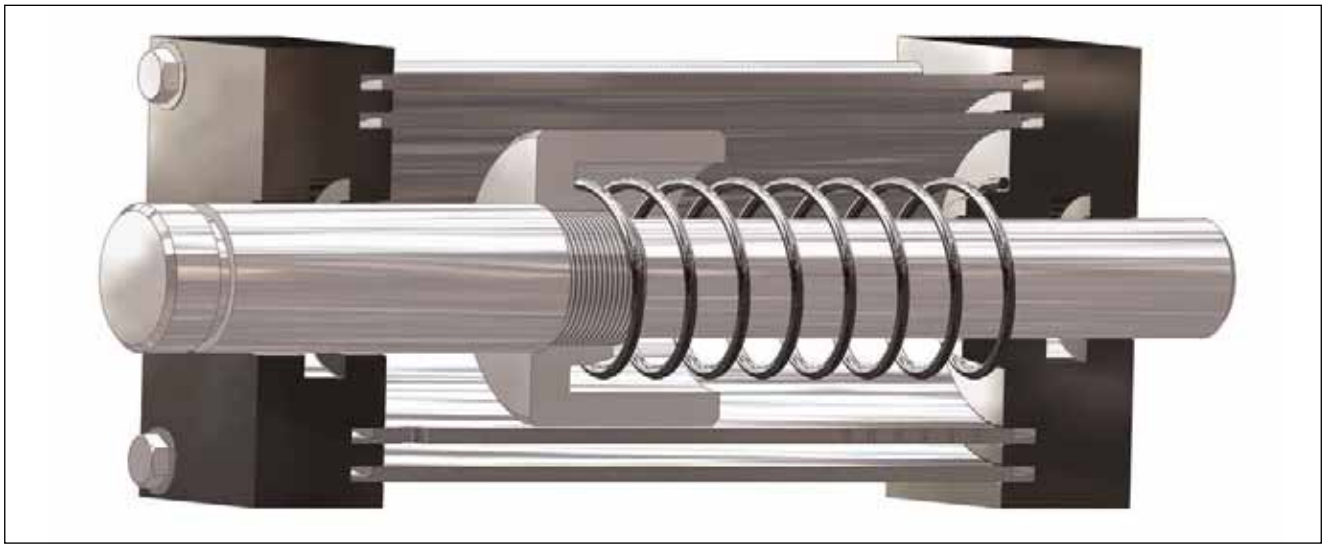

Figure 4-10. Energy Absorbing Cylinder

To avoid excessively slow return after compression, a check valve in the blind head will permit oil to by-pass the orifice plugs under pressure from the accumulator.The rate of energy absorption (and its conversion to heat energy) can be varied by adjusting variable orifice plugs (not shown) or by changing the fixed plugs (shown) to plugs with higher or lower clearances.

Linear-to-Rotary Motion Converter

A linear-to-rotary motion converter is a rack and pinion type design that utilizes a fluid power linear actuator to drive rotary motion. As shown in Figure 4-12 the rod and piston are fixed, while the cylinder bore and end glands move in reciprocating motion. A toothed rack engages a pinion gear, which rotates as the cylinder strokes.

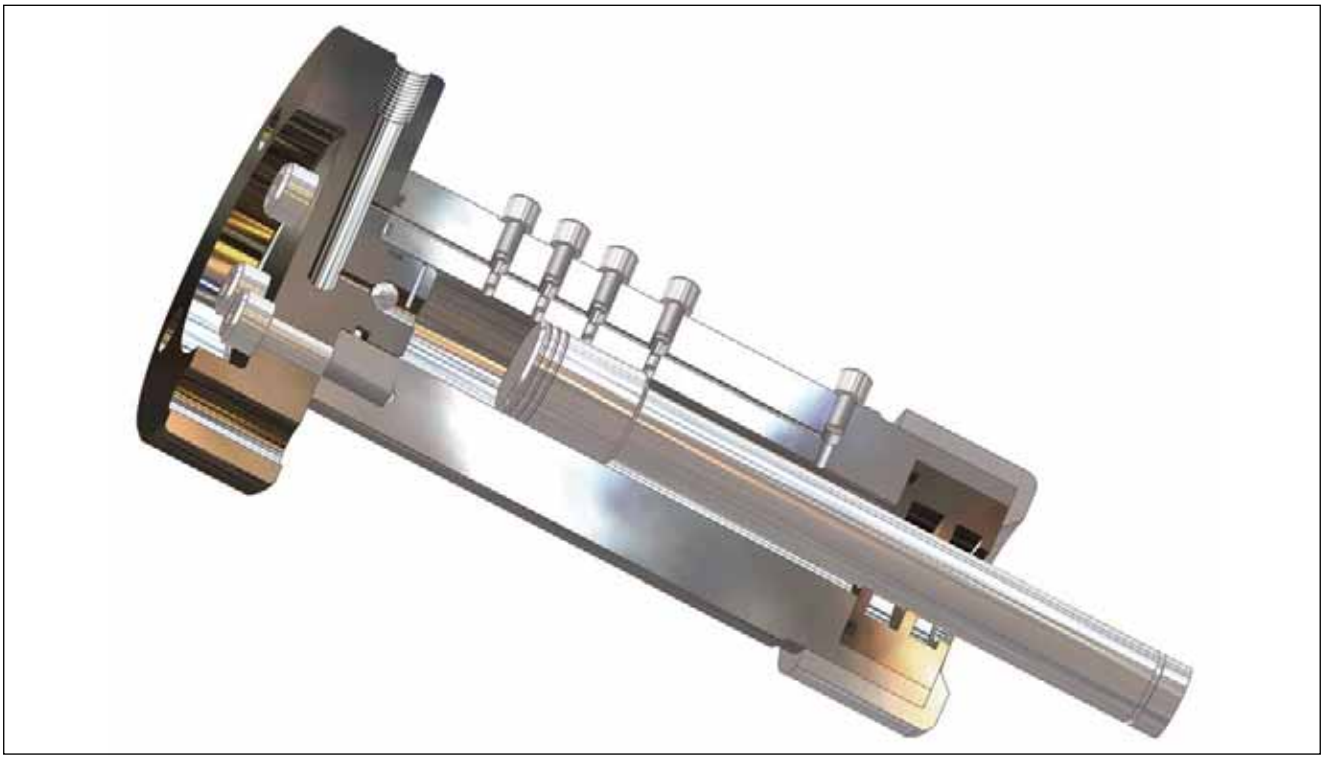

Figure 4-11. High Shock Energy Absorbing Cylinder

Figure 4-12. Linear-to-Rotary Motion Converter

Parker Hannifin Corporation
Engineered Polymer Systems Division
Phone: 801 972 3000

Since the rod is fixed, it may be possible to feed the input and exhaust fluid through a hollow portion of the rod as shown. Ports located deep in the rod allow fluid to flow through the cylinder. The fixed double-ends of the cylinder help to maintain a firm, precision engagement between the rack and pinion. Since this engagement generates some lateral force, a piston bearing may be required to maintain concentricity of the piston in the cylinder. Typically, the piston always remains directly above the pinion, so additional rod bearings may not be required. In applications where an off-center load is imparted by the pinion, it may be necessary to add rod bearings to the end caps to resist the torque on the cylinder. Dual lip seals or a single bi-directional seal can be selected for the piston. Both the piston and rod seals should be selected based on the operating parameters of the application. Although the cylinder shown is positioned in an enclosed area, it may be necessary to add rod wipers to provide additional protection from contamination.

Cartridge Valve

Cartridge valves can be thought of as “bodyless”—valves without an integral housing—because they consist of only the internal moving elements of the valves. After a cartridge is inserted into a cavity, such as a manifold with appropriate flow passageways, the resulting valve performs like any conventional valve. Slip-in cartridges are held in the cavity by a cover plate or can be designed to screw directly into the cavity (see Figure 4-13). Another type of insertable cartridge valve has circumferential grooves. After it is inserted into the cavity, it is held in place by swaging internally with a tapered pin that expands the cartridge diameter into interference contact with the bore.

Historically, an o-ring and a single back up comprise the two piece sealing system used in most cartridge valves. Sealing against a dynamic surface, an o-ring can twist and fail. A single, stable polyurethane profile designed to directly retrofit the traditional groove provides easier installation, improved stability and better extrusion resistance.

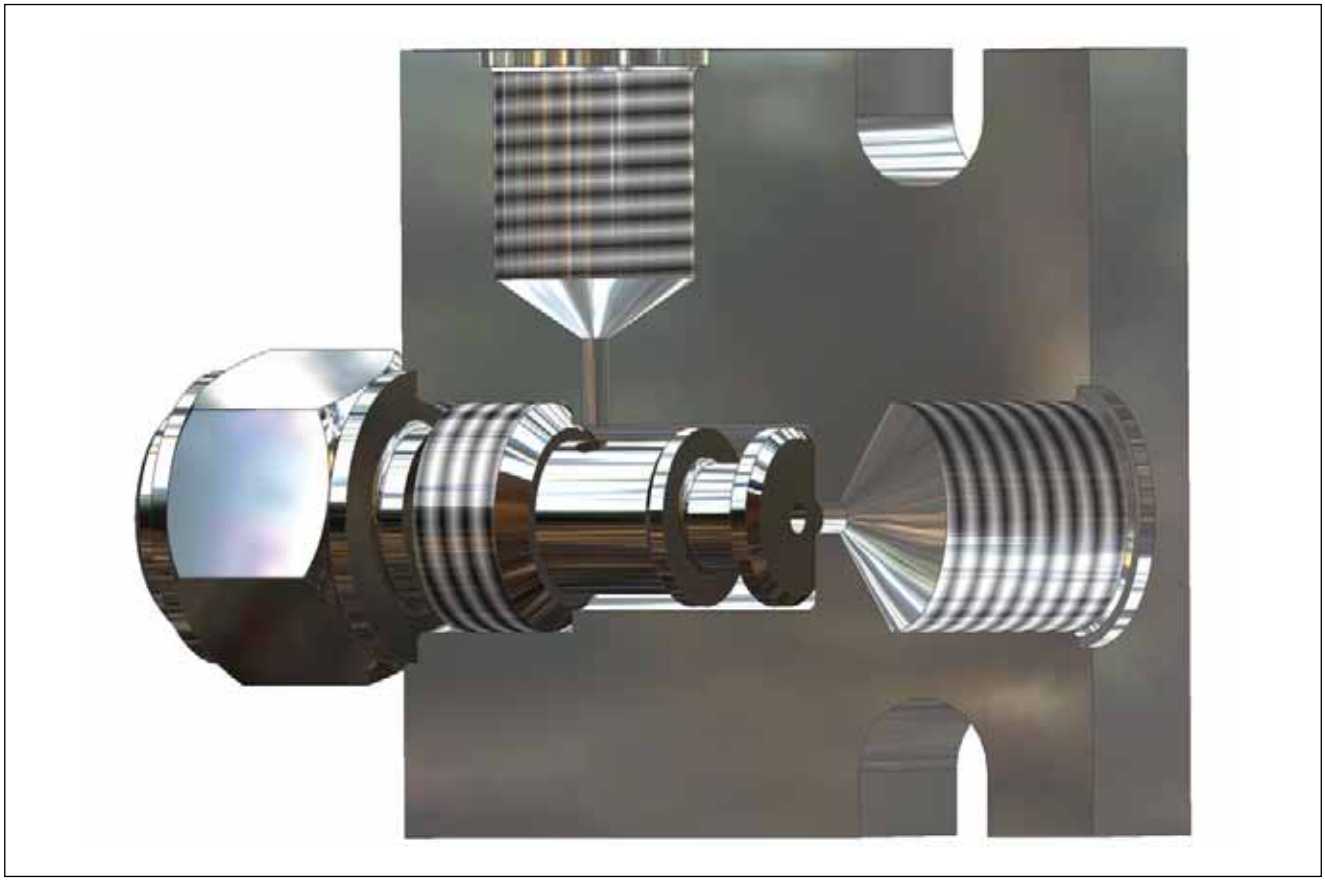

Figure 4-13. Cartridge Valve

Parker Hannifin Corporation
Engineered Polymer Systems Division
Phone: 801 972 3000

Spool Valve

A spool valve is a directional-control valve in which a spool slides axially in a bore to direct the flow of system fluid. The valve element slides back and forth to block and uncover ports in the housing. Sometimes called a piston type, the sliding-spool valve has a piston of which the inner areas are equal. Pressure from the inlet ports acts equally on both inner piston areas regardless of the position of the spool. Internal sealing is done by a machine fit between the spool and valve body or sleeve. A lip seal and wiper are recommended to seal the external end of the spool.

Spool valves are often classified according to the flow conditions created when it is in the normal or neutral position. A closed-center spool blocks all valve ports from each other when in the normal position. In an open-center spool, all valve ports are open to each other when the spool is in the normal position. Spool valves (see Figure 4-14) are popular on modern hydraulic systems because they:

- Can be precision-ground for fine-oil metering.
- Can be made to handle flows in many directions by adding extra lands and oil ports.
- Stack easily into one compact control package, which is important on mobile systems.

Piston Pump

Piston pumps and plunger pumps are reciprocating pumps that use a plunger or piston to move media through a cylindrical chamber. The plunger or piston is actuated by a steam powered, pneumatic, hydraulic, or electric drive. Piston pumps and plunger pumps are also called well service pumps, high pressure pumps, or high viscosity pumps.

Seals are an integral part of piston pumps and plunger pumps to separate the power fluid from the media that is being pumped. A stuffing box or packing is used to seal the joint between the vessel where the media is transferred and the plunger or piston. A stuffing box may be composed of bushings, packing or seal rings, and a gland.

The difference between piston pumps and plunger pumps as compared to rotary piston pumps is the actual mechanism used to transfer the fluid. The piston elements moving along an axis are called axial piston pumps. Rotary piston pumps typically have an internal rotating mechanism that moves the piston.

Diaphragm Pump

Diaphragm pumps are common industrial pumps that use positive displacement to move liquids. These devices typically include a single diaphragm and

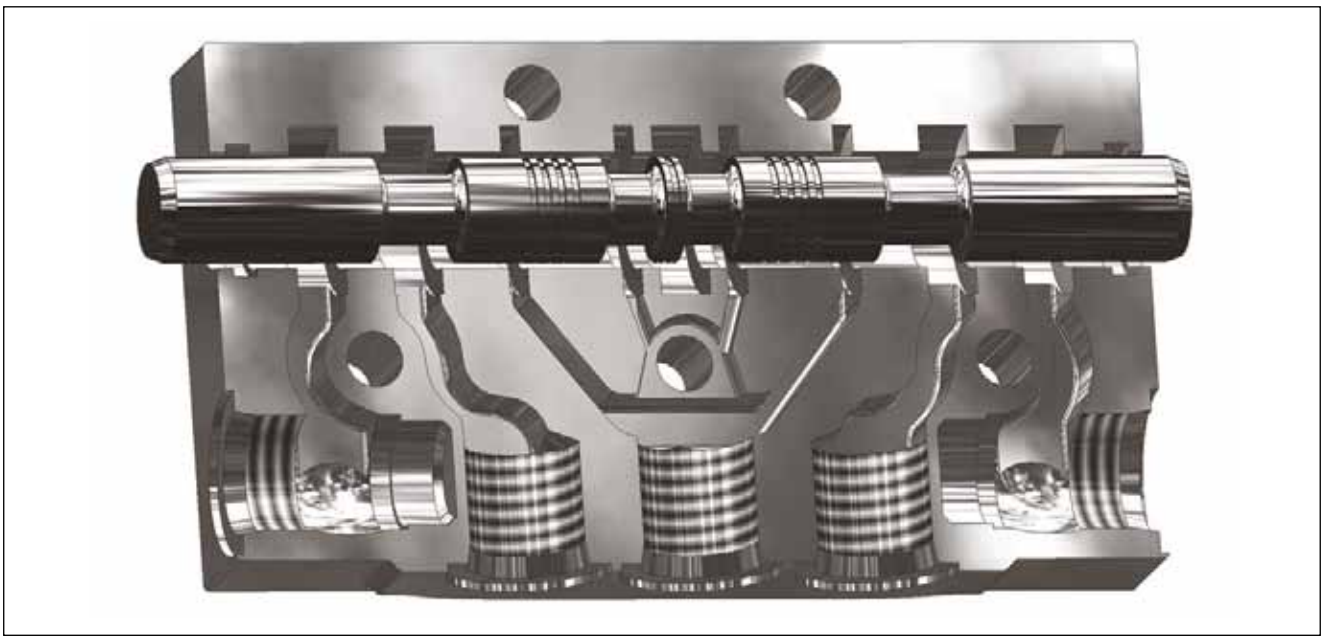

Figure 4-14. Spool Valve

Parker Hannifin Corporation
Engineered Polymer Systems Division
Phone: 801 972 3000

chamber, as well as suction and discharge check valves to prevent backflow. Pistons are either coupled to the diaphragm, or used to force hydraulic oil to drive the diaphragm. Diaphragm pumps are highly reliable because they do not include internal parts that rub against each other. In fact, prolonged diaphragm life may be possible if the diaphragm pump is run dry to prime. Typically, wear on the diaphragm or flap is due to the corrosive properties of media fluids or gases and/or excessive air supply pressures. Diaphragm materials such as ethylene propylene (EPDM), polytetrafluoroethylene (PTFE), plastic, rubber, and elastomers provide resistance to chemicals, sunlight, weathering, and ozone. Housing materials include aluminum, brass or bronze, cast iron, plastic and stainless steel. Rugged diaphragm pump housings can withstand high temperatures and may be exposed to various grades of water, oils, and other solvents.

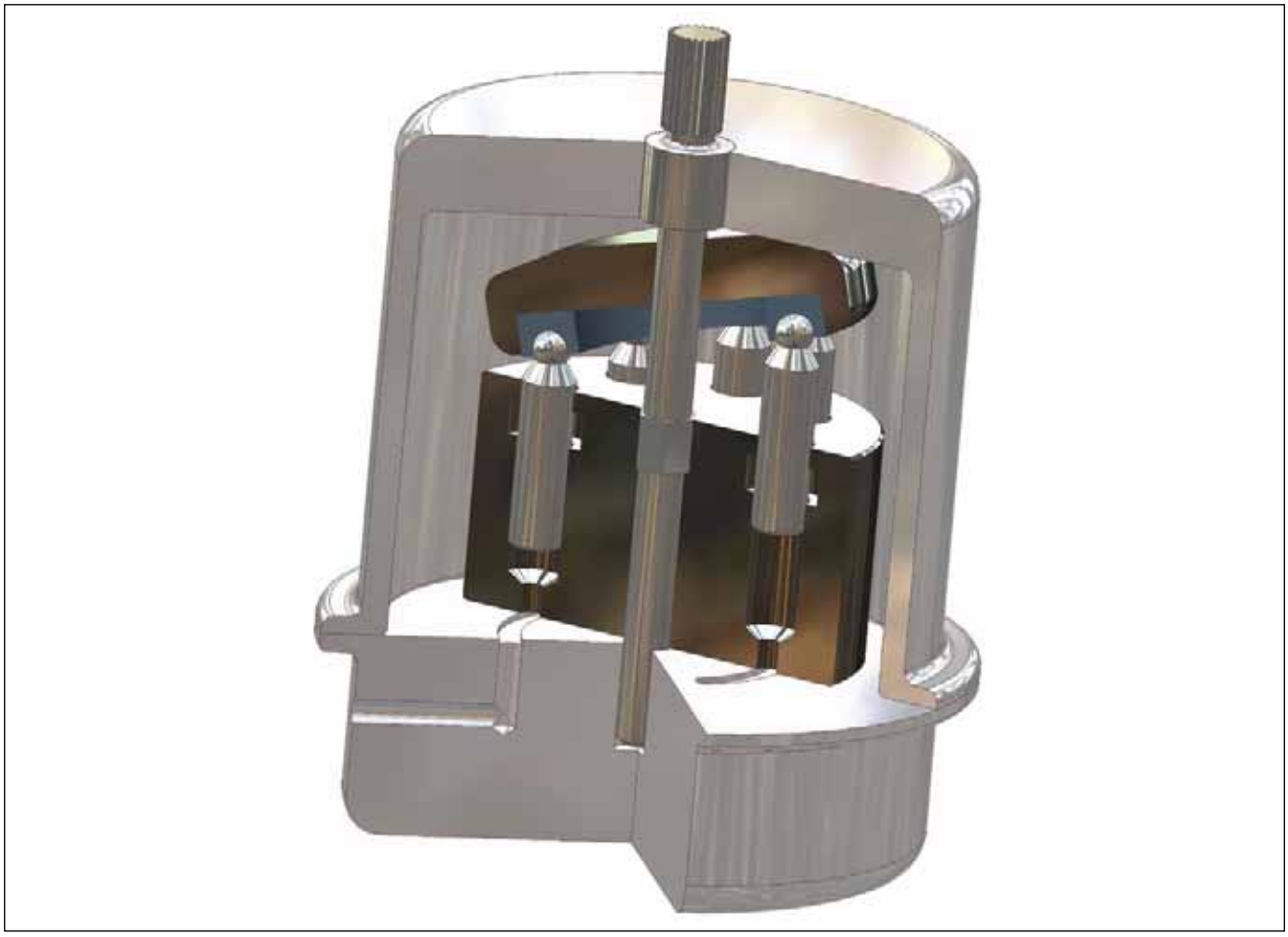

Figure 4-15. Piston Pump

Parker Hannifin Corporation
Engineered Polymer Systems Division
Phone: 801 972 3000

Contents

Product Offering 5-2
Decision Tree 5-3
Rod Seal Profiles
BD 5-5
BT 5-7
BS 5-9
B3 5-11
UR 5-13
E5 5-21
TR 5-24
ON 5-28
CR 5-32
OC 5-39
BR 5-45
OD 5-48
V6 5-54
OR 5-57

Rod Seals

Parker offers a wide range of hydraulic and pneumatic rod seal profiles to meet the broad demands of the fluid power industry. These rod seals are offered in a variety of compounds and lip geometries for the best possible solution for a given application. A majority of Parker rod seals are manufactured utilizing a precision knife trim process to ensure the sealing contact with the dynamic surface yields the best possible performance. When combined with other Parker profiles, including bearings, buffer seals, dirt excluders, and static gland seals, Parker rod seals have proven to provide long life and leak free performance.

Parker Hannifin Corporation
Engineered Polymer Systems Division
Phone: 801 972 3000

Profiles

Table 5-1: Product Profiles

Series	Description	Application (Duty)				Page
		Light	Medium	Heavy	Pneumatic	
BD	Premium O-ring Energized Lip Seal (available with optional back-up)					5-5
BT	Premium U-cup Rod Seal with Secondary Stabilizing Lip					5-7
BS	U-cup Rod Seal with Secondary Stabilizing Lip					5-9
B3	U-cup Rod Seal					5-11
UR	Industrial U-cup Rod Seal					5-13
E5	Premium Rounded Lip U-cup Rod Seal					5-21
TR	Compact Seal with Anti-Extrusion Technology					5-24

Series	Description	Application (Duty)				Page
		Light	Medium	Heavy	Pneumatic	
ON	PTFE Rod Cap Seal					5-28
CR	PTFE Rod Cap Seal to Retrofit O-ring Glands					5-32
OC	Compact PTFE Rod Cap Seal					5-39
BR	Premium Buffer Seal					5-45
OD	PTFE Buffer Seal					5-48
V6	Cushion Seal					5-54
OR	Rotary PTFE Cap Seal					5-57

Parker Hannifin Corporation
Engineered Polymer Systems Division
Phone: 801 972 3000

Rod Seal Decision Tree

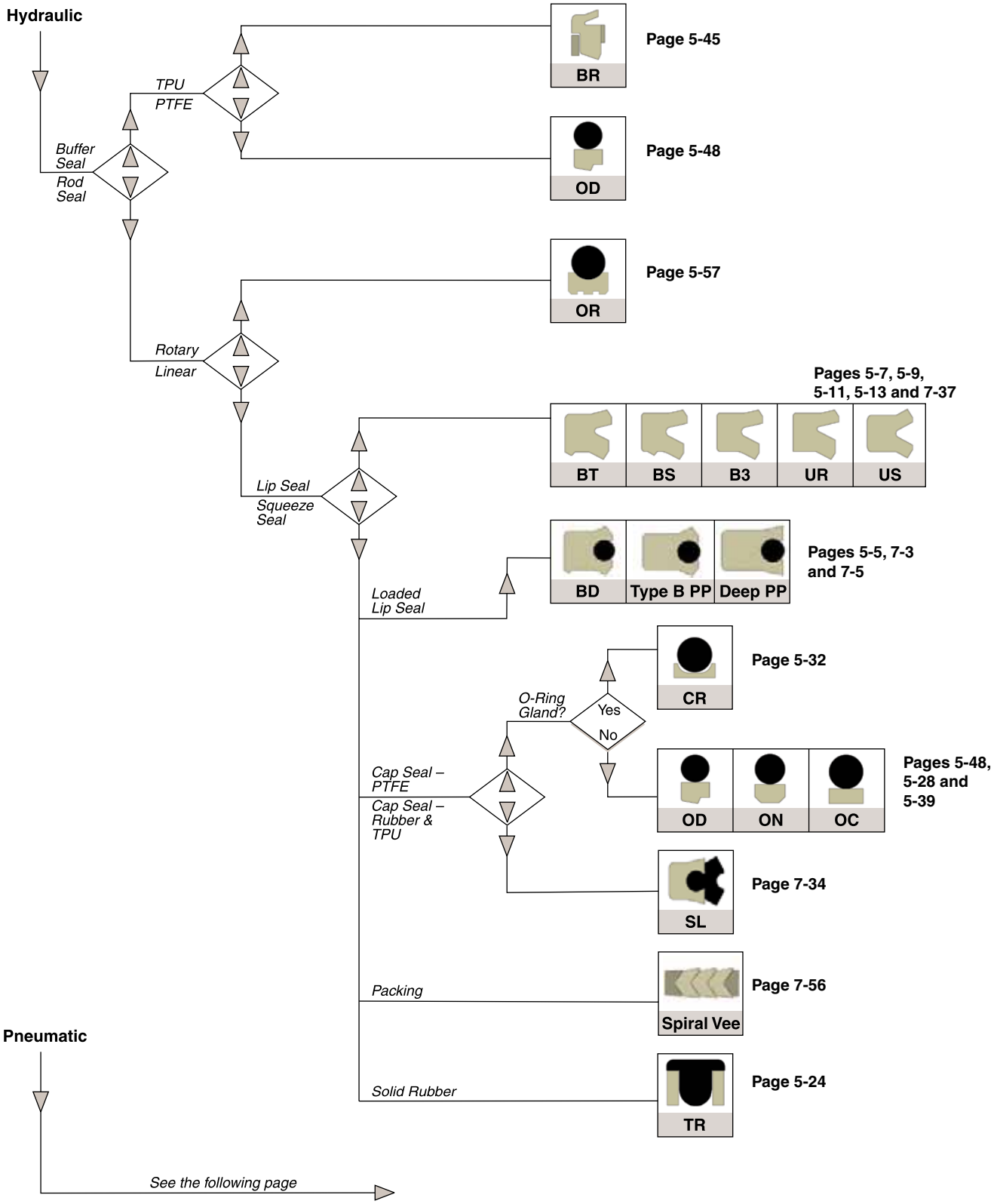

Non-Symmetrical Rod Decision Tree (continued)

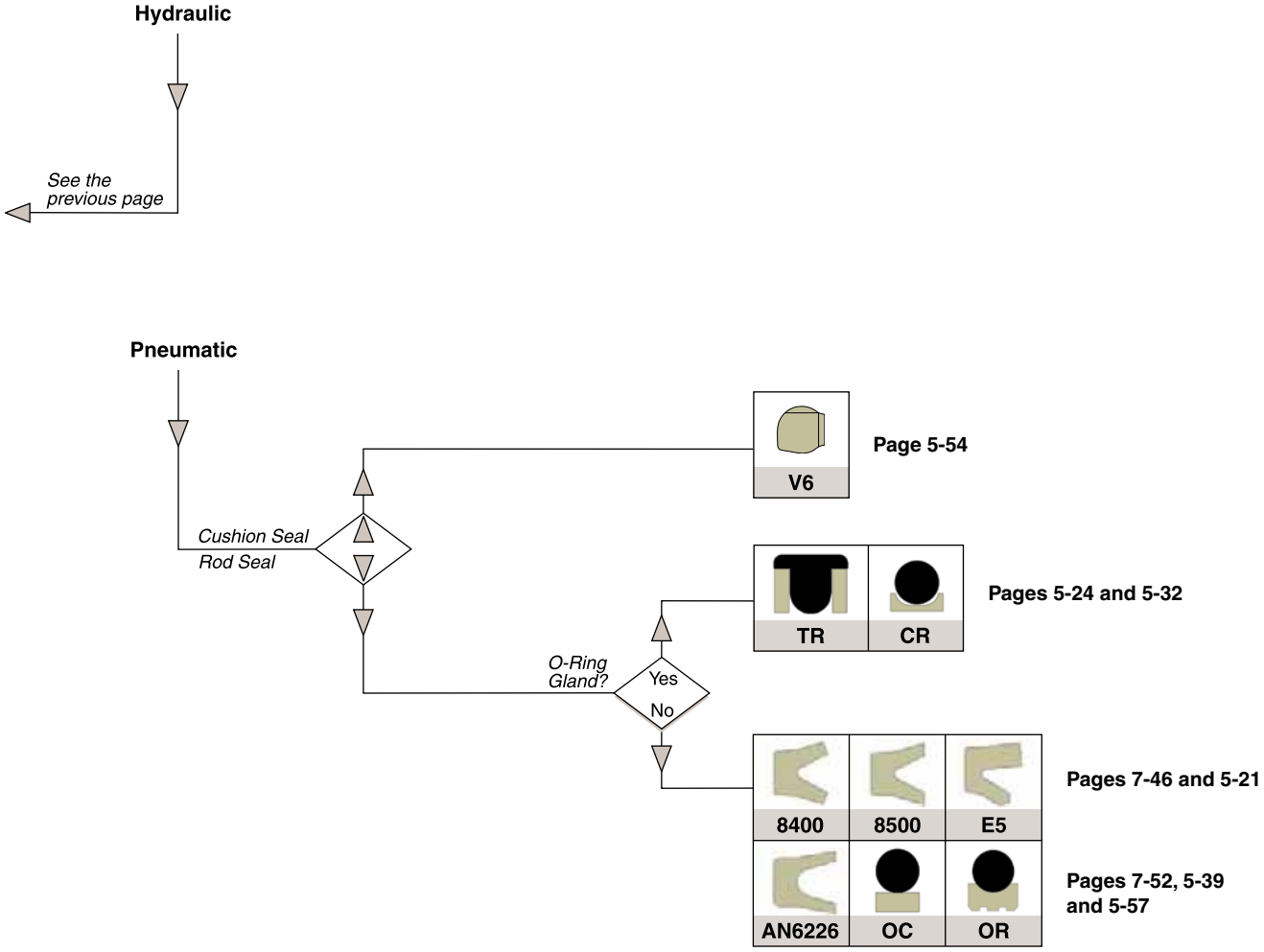

Parker Hannifin Corporation
Engineered Polymer Systems Division
Phone: 801 972 3000

BD Profile, Premium O-ring Energized Lip Seal

The BD profile is a non-symmetrical profile rod seal. Its rectangular shaped cross section ensures stability in the gland. The o-ring energizer functions as a spring to maintain sealing contact under low pressure or vacuum applications. The knife trimmed, beveled lip does an excellent job wiping fluid film. A secondary sealing lip is located below the primary sealing lip, just above the base of the seal, to provide enhanced sealing performance and ensure a tight, stable fit in the gland. Available in Parker's proprietary urethanes, the BD profile provides long life, extrusion resistance, low compression set, shock load resistance and increased sealing performance at zero pressure. The BD profile is designed to be used as a stand alone rod seal or for use with the BR or OD profile buffer seals for more critical sealing applications. Also available with a positively-activated back-up.

Technical Data

Standard Materials*	Temperature Range	Pressure Range†	Surface Speed
P4300A90	-65°F to 275°F (-54°C to 135°C)	5000 psi (344 bar)	< 1.6 ft/s (0.5 m/s)
P4301A90	-65°F to 275°F (-54°C to 135°C)	5000 psi (344 bar)	< 1.6 ft/s (0.5 m/s)
P4700A90	-65°F to 200°F (-54°C to 93°C)	5000 psi (344 bar)	< 1.6 ft/s (0.5 m/s)
P5065A88	-70°F to 200°F (-57°C to 93°C)	3500 psi (241 bar)	< 1.6 ft/s (0.5 m/s)

BD Cross-Section

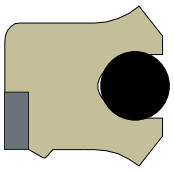

BD Cross-Section with Back-up

***Alternate Materials:** For applications that may require an alternate material, please contact your local Parker Seal representative.

†**Pressure Range** without wear rings (see Table 2-4, page 2-5).
Pressure Range with positively-activated back-up to 10,000 psi (688 bar).

Options: A back-up ring located in the heel of the BD profile can be provided for enhanced extrusion protection. See part number nomenclature for designating this option. Contact your local Parker Seal representative for price and availability.

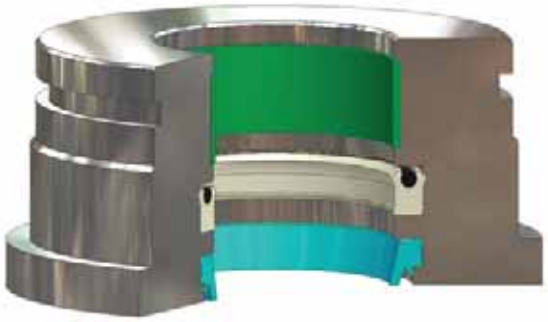

BD Installed in Rod Gland

09/01/07

Parker Hannifin Corporation
Engineered Polymer Systems Division
Phone: 801 972 3000

www.parkerseals.com

Part Number Nomenclature — BD Profile

Table 5-2. BD Profile — Inch

Optional*

4	3	0	0	BD	2	5	0	0	2	0	0	0	-	-	-	N	3	7	5

Seal Compound 4-Digit Material Code
Example:
4300 = 90A Resilon HT Polyurethane

Profile

Gland Depth (x1000) or Seal Nominal Radial Cross-Section
Example: .250 x 1000 = 250

Rod Diameter (x1000) or Seal Nominal I.D.
Example: 2.000 x 1000 = 02000

Positively Actuated Back-up Ring Rod:
R0 = Virgin PTFE
R1 = Nylatron
R12 = PEEK

Energizer Material Code
Example: 70A Nitrile O-ring = N
See Table 6-3 on page 6-5 for additional energizer options.

Seal Nominal Axial Width
Example: .375 x 1000 = 375

5

***Tooling may be required.** See gland dimension table for current standard sizes with Positively Actuated back-up. Do not include this option in the part number if the back-up ring is not required. See Section 10, page 10-21, for a description of Positively Actuated back-ups.

Part Number Nomenclature — BD Profile

Table 5-3. BD Profile — Metric

Optional*

M	3	0	0	BD	0	7	.	5	0	7	0	-	-	-	N	1	2	.	5

Seal Compound 4-Digit Material Code (First digit “4” replaced with “M” for Metric)
Example:
M300 = 90A Resilon HT Polyurethane

Profile

Gland Depth (mm) or Seal Nominal Radial Cross-Section
Example: 07.5 = 7.5 mm

Rod Diameter (mm)
Example: 070 = 70 mm

Positively Actuated Back-up Ring Rod:
R0 = Virgin PTFE
R1 = Nylatron
R12 = PEEK

Seal Nominal Axial Width (mm)
Example:
12.5 = 12.5mm

Energizer Material Code
Example:
N = 70A Nitrile O-ring
See Table 6-3 on page 6-5 for additional energizer options.

***Tooling may be required.** See gland dimension table for current standard sizes with Positively Actuated back-up. Do not include this option in the part number if the back-up ring is not required. See Section 10, page 10-21, for a description of Positively Actuated back-ups.

Gland Dimensions — BD Profile

BD gland dimensions are provided in Table 5-12 on page 5-15.

09/01/07

Parker Hannifin Corporation
Engineered Polymer Systems Division
Phone: 801 972 3000
www.parkerseals.com

BT Profile, Premium U-cup Rod Seal with Secondary Stabilizing Lip

The BT profile is a non-symmetrical design for use in hydraulic rod sealing applications. Using Finite Element Analysis, the BT profile was designed to provide improved sealing performance and stability in the gland. A knife trimming process is used to form the beveled lip which is best for removing fluid from the rod. By design, the BT profile has a more robust primary sealing lip than the BS profile and the secondary lip is located at the base of the heel. The standard compound for the BT profile is Parker's proprietary Resilon compound. The BT profile provides long life, extrusion resistance, low compression set, shock load resistance and increased sealing performance at zero pressure. The BT profile is designed for use as a stand alone rod seal or for use with the BR or OD profile buffer seals for more critical sealing applications.

Technical Data

Standard Materials*	Temperature Range	Pressure Range†	Surface Speed
P4300A90	-65°F to 275°F (-54°C to 135°C)	5000 psi (344 bar)	< 1.6 ft/s (0.5 m/s)
P4301A90	-65°F to 275°F (-54°C to 135°C)	5000 psi (344 bar)	< 1.6 ft/s (0.5 m/s)

***Alternate Materials:** For applications that may require an alternate material, please contact your local Parker Seal representative.

†Pressure Range without wear rings (see Table 2-4, page 2-5).

BT Cross-Section

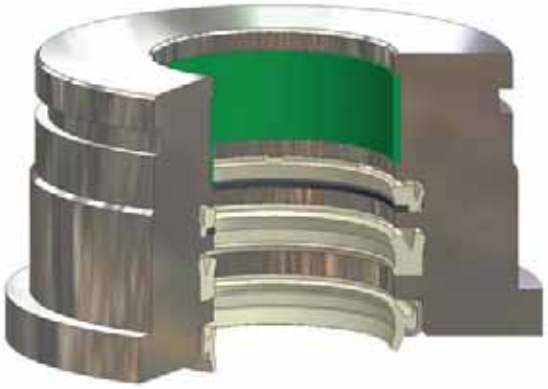

BT Installed in Rod Gland

Parker Hannifin Corporation
Engineered Polymer Systems Division
Phone: 801 972 3000

Part Number Nomenclature — BT Profile

Table 5-4. BT Profile — Inch

4	3	0	0	BT	2	5	0	0	2	0	0	0	-	3	7	5

Seal Compound
4-Digit Material Code
Example:
4300 = 90A Resilon HT Polyurethane

Profile

Gland Depth (x1000) or Seal Nominal Radial Cross-Section
Example: .250 x 1000 = 250

Rod Diameter (x1000) or Seal Nominal I.D.
Example: 2.000 x 1000 = 02000

Seal Nominal Axial Width
Example: .375 x 1000 = 375

Part Number Nomenclature — BT Profile

Table 5-5. BT Profile — Metric

5

M	3	0	0	BT	0	7	.	5	0	7	0	-	1	2	.	5

Seal Compound
4-Digit Material Code
(First digit “4” replaced with “M” for Metric)
Example:
M300 = 90A Resilon HT Polyurethane

Profile

Gland Depth (mm) or Seal Nominal Radial Cross-Section
Example: 07.5 = 7.5 mm

Rod Diameter (mm)
Example: 070 = 70 mm

Seal Nominal Axial Width (mm)
Example: 12.5 = 12.5mm

Gland Dimensions — BT Profile

BT gland dimensions are provided in Table 5-12 on page 5-15.

Parker Hannifin Corporation
Engineered Polymer Systems Division
Phone: 801 972 3000

BS Profile, U-cup Rod Seal with Secondary Stabilizing Lip

The BS profile is a non-symmetrical profile designed for use in hydraulic rod sealing applications. A knife trimmed beveled sealing lip does an excellent job wiping fluid from the rod. In addition, a secondary sealing lip is located just above the base of the seal to provide enhanced sealing performance and ensure a tight, stable fit in the gland. Available in Parker proprietary urethanes, the BS profile provides long life, extrusion resistance, low compression set, shock load resistance and increased sealing performance at zero pressure. The BS profile is designed to be used as a stand alone rod seal or for use with the BR or OD profile buffer seals for more critical sealing applications.

Technical Data

Standard Materials*	Temperature Range	Pressure Range†	Surface Speed
P4300A90	-65°F to 275°F (-54°C to 135°C)	5000 psi (344 bar)	< 1.6 ft/s (0.5 m/s)
P4615A90	-65°F to 200°F (-54°C to 93°C)	5000 psi (344 bar)	< 1.6 ft/s (0.5 m/s)
P4700A90	-65°F to 200°F (-54°C to 93°C)	5000 psi (344 bar)	< 1.6 ft/s (0.5 m/s)
P5065A88	-70°F to 200°F (-57°C to 93°C)	3500 psi (241 bar)	< 1.6 ft/s (0.5 m/s)

BS Cross-Section

***Alternate Materials:** For applications that may require an alternate material, please contact your local Parker Seal representative.

†**Pressure Range** without wear rings (see Table 2-4, page 2-5).

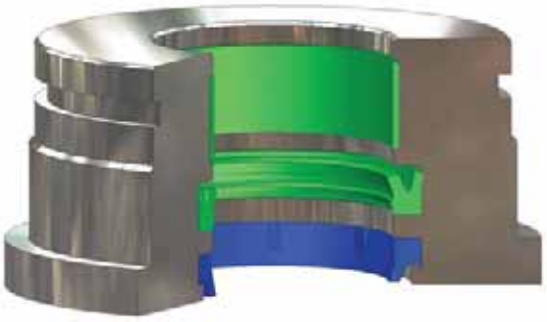

BS Installed in Rod Gland

Parker Hannifin Corporation
Engineered Polymer Systems Division
Phone: 801 972 3000

Part Number Nomenclature — BS Profile

Table 5-6. BS Profile — Inch

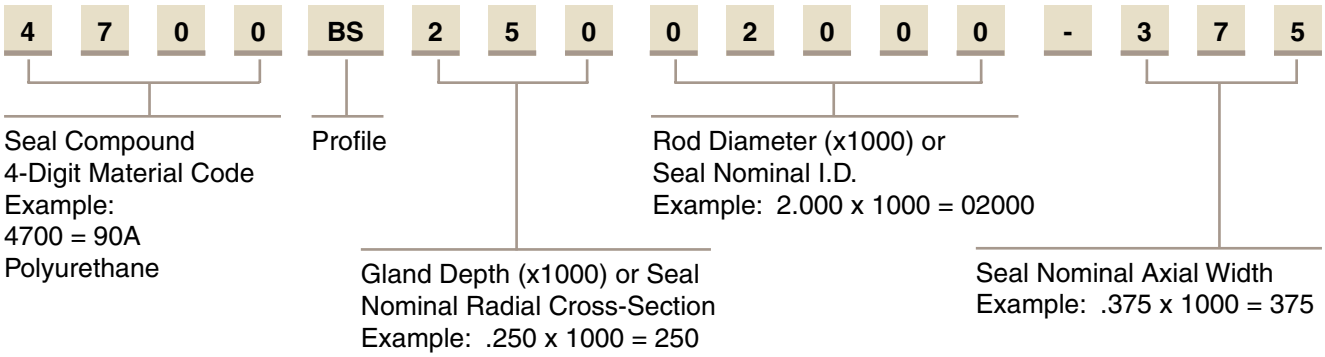

Part Number Nomenclature —BS Profile

Table 5-7. BS Profile — Metric

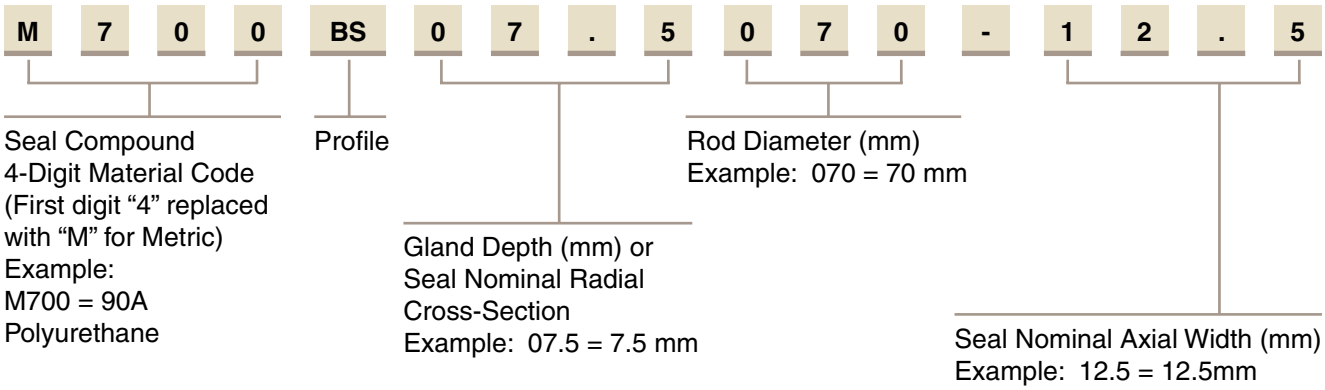

Gland Dimensions — BS Profile

BS gland dimensions are provided in Table 5-15 on page 5-15.

Parker Hannifin Corporation
Engineered Polymer Systems Division
Phone: 801 972 3000

B3 Profile, U-cup Rod Seal

The B3 profile is a non-symmetrical design for use in hydraulic rod sealing applications. The diameter of the B3 profile is designed to ensure a tight static side seal when installed. The knife trimmed, beveled lip does an excellent job wiping fluid film. The B3 profile is available in Parker proprietary compounds offering extrusion resistance, long wear, and low compression set. The B3 profile is designed for use as a stand alone rod seal and can be used with Parker's BR or OD profile buffer seals for more critical sealing applications. The B3 profile does not utilize a secondary sealing lip and can be used with a double lip wiper seal, such as the AY profile, to provide a multiple lip, rod sealing system without trapping pressure.

Technical Data

Standard Materials*	Temperature Range	Pressure Range†	Surface Speed
P4300A90	-65°F to 275°F (-54°C to 135°C)	5000 psi (344 bar)	< 1.6 ft/s (0.5 m/s)
P4301A90	-65°F to 275°F (-54°C to 135°C)	5000 psi (344 bar)	< 1.6 ft/s (0.5 m/s)
P4700A90	-65°F to 200°F (-54°C to 93°C)	5000 psi (344 bar)	< 1.6 ft/s (0.5 m/s)
P5065A88	-70°F to 200°F (-57°C to 93°C)	3500 psi (241 bar)	< 1.6 ft/s (0.5 m/s)

***Alternate Materials:** For applications that may require an alternate material, please contact your local Parker Seal representative.

†Pressure Range without wear rings (see Table 2-4, page 2-5).

B3 Cross-Section

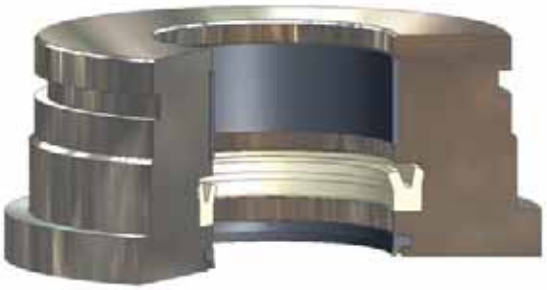

B3 Installed in Rod Gland

Parker Hannifin Corporation
Engineered Polymer Systems Division
Phone: 801 972 3000

Part Number Nomenclature — B3 Profile

Table 5-8. B3 Profile — Inch

4	3	0	0	B3	2	5	0	0	2	0	0	0	-	3	7	5

Seal Compound
4-Digit Material Code
Example:
4300 = 90A Resilon HT Polyurethane

Profile

Gland Depth (x1000) or Seal Nominal Radial Cross-Section
Example:
.250 x 1000 = 250

Rod Diameter (x1000) or Seal Nominal I.D.
Example:
2.000 x 1000 = 02000

Seal Nominal Axial Width
Example:
.375 x 1000 = 375

5

Part Number Nomenclature — B3 Profile

Table 5-9. B3 Profile — Metric

M	3	0	0	B3	0	7	.	5	0	7	0	-	1	2	.	5

Seal Compound
4-Digit Material Code
(First digit “4” replaced with “M” for Metric)
Example:
M300 = 90A Resilon HT Polyurethane

Profile

Gland Depth (mm) or Seal Nominal Radial Cross-Section
Example: 07.5 = 7.5 mm

Rod Diameter (mm)
Example:
070 = 70 mm

Seal Nominal Axial Width (mm)
Example:
12.5 = 12.5mm

Gland Dimensions — B3 Profile

B3 gland dimensions are provided in Table 5-12 on page 5-15.

Parker Hannifin Corporation
Engineered Polymer Systems Division
Phone: 801 972 3000

UR Profile, Industrial U-cup Rod Seal

The UR profile is a non-symmetrical, hydraulic cylinder rod seal. The knife trimmed, beveled lip faces the rod to provide enhanced low to high pressure sealing and wiping action. The UR profile is an economical choice, available in Parker's wear and extrusion resistant Molythane compound.

Technical Data

Standard Materials*	Temperature Range	Pressure Range†	Surface Speed
P4615A90	-65°F to 200°F (-54°C to 93°C)	5000 psi (344 bar)	< 1.6 ft/s (0.5 m/s)

***Alternate Materials:** For applications that may require an alternate material, please contact your local Parker Seal representative.

†Pressure Range without wear rings (see Table 2-4, page 2-5).

UR Cross-Section

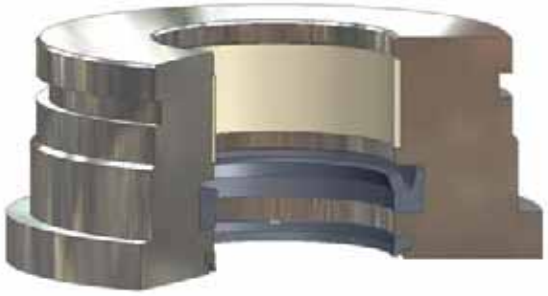

UR Installed in Rod Gland

Parker Hannifin Corporation
Engineered Polymer Systems Division
Phone: 801 972 3000

Part Number Nomenclature — UR Profile

Table 5-10. UR Profile — Inch

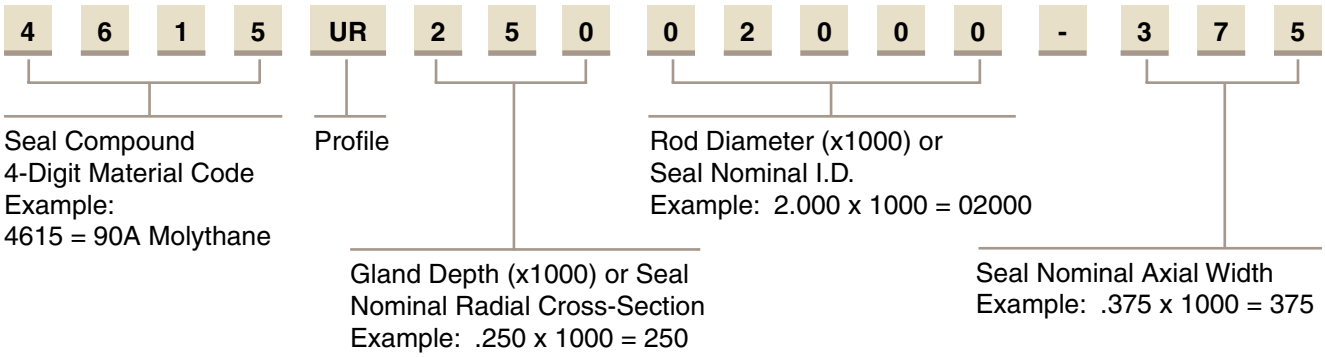

Gland Dimensions — UR Profile

UR gland dimensions are provided in Table 5-12 on page 5-15.

Parker Hannifin Corporation
Engineered Polymer Systems Division
Phone: 801 972 3000

Gland Dimensions — BD, BT, BS, B3 and UR Profiles — Inch

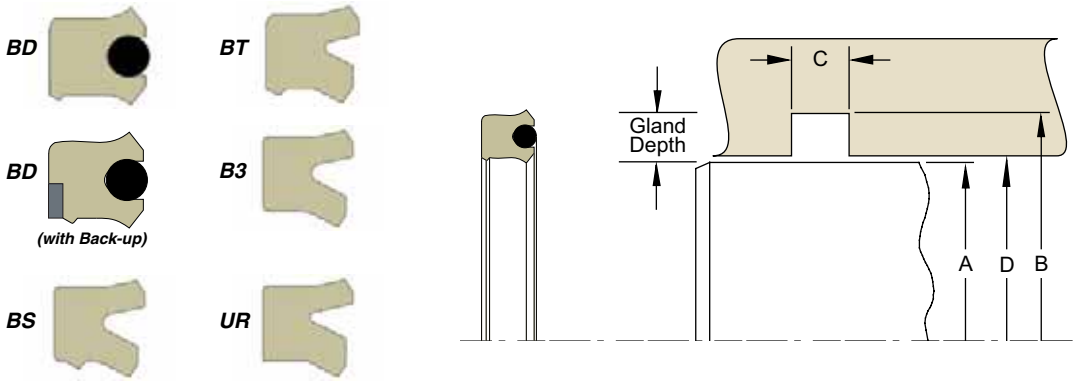

Table 5-11. Gland Dimension Tolerances

Nominal Gland Depth	A Rod Diameter	B Groove Diameter	C Groove Width	D Throat Diameter
1/8	+.000/-.001	+.002/-.000	+.015/-.000	+.002/-.000
3/16	+.000/-.002	+.002/-.000		+.002/-.000
1/4	+.000/-.002	+.003/-.000		+.003/-.000
5/16	+.000/-.002	+.004/-.000		+.003/-.000
3/8	+.000/-.002	+.005/-.000		+.004/-.000
7/16	+.000/-.003	+.006/-.000		+.004/-.000
1/2	+.000/-.003	+.007/-.000		+.005/-.000
5/8	+.000/-.003	+.009/-.000		+.006/-.000
3/4	+.000/-.004	+.011/-.000		+.007/-.000
1	+.000/-.005	+.015/-.000		+.009/-.000

Please refer to Engineering Section 2, Page 2-8 for surface finish and additional hardware considerations.

Table 5-12. BD, BT, BS, B3 and UR Gland Dimensions — Inch

A Rod Diameter	B Groove Diameter	C Groove Width	D Throat Diameter*	Compounds (X = Standard Offering)												Part Number				
				BD				BT	BS				B3		UR	Compound Code	Profile Code		Energizer Code (BD)	
				4300	4700	5065	With Back-up	4300	4300	4700	4615	5065	4300	5065	4615					
0.219	0.469	0.248	0.220					X								XXXX	xx	12500219	-	225
0.250	0.500	0.206	0.251	X		X		X							X	XXXX	xx	12500250	-	187
0.312	0.562	0.206	0.313	X		X		X								XXXX	xx	12500312	-	187
0.375	0.625	0.206	0.376					X								XXXX	xx	12500375	-	187
0.437	0.687	0.138	0.438												X	XXXX	xx	12500437	-	125
0.437	0.687	0.206	0.438					X								XXXX	xx	12500437	-	187
0.500	0.687	0.172	0.501								X					XXXX	xx	09300500	-	156
0.500	0.750	0.206	0.501	X		X	X	X	X			X				XXXX	xx	12500500	-	187
0.500	0.750	0.275	0.501					X	X			X				XXXX	xx	12500500	-	250
0.500	1.000	0.413	0.501							X		X				XXXX	xx	25000500	-	375
0.562	0.812	0.275	0.563						X			X				XXXX	xx	12500562	-	250
0.625	0.875	0.275	0.626					X	X		X	X			X	XXXX	xx	12500625	-	250
0.625	1.000	0.303	0.626					X								XXXX	xx	18700625	-	275
0.625	1.000	0.343	0.626	X		X		X								XXXX	xx	18700625	-	312

*If used with wear rings, refer to wear ring throat diameter, see Section 9.
For custom groove calculations, see Appendix C.

09/01/07

Parker Hannifin Corporation
Engineered Polymer Systems Division
Phone: 801 972 3000

Table 5-12. BD, BT, BS, B3 and UR Gland Dimensions — Inch (Continued)

A Rod Diameter	B Groove Diameter	C Groove Width	D Throat Diameter*	Compounds (X = Standard Offering)												Part Number				
				BD				BT	BS				B3		UR	Compound Code	Profile Code		Energizer Code (BD)	
				4300	4700	5065	With Back-up	4300	4300	4700	4615	5065	4300	5065	4615					
0.687	1.062	0.206	0.626												X	XXXX	xx	18700687	-	187
0.750	1.000	0.275	0.751	X		X		X	X		X	X			X	XXXX	xx	12500750	-	250
0.750	1.125	0.275	0.751					X								XXXX	xx	18700750	-	250
0.750	1.125	0.343	0.751												X	XXXX	xx	18700750	-	312
0.812	1.187	0.206	0.813												X	XXXX	xx	18700812	-	187
0.812	1.187	0.275	0.813					X								XXXX	xx	18700812	-	250
0.875	1.125	0.275	0.876					X		X		X			X	XXXX	xx	12500875	-	250
0.875	1.250	0.275	0.876							X	X	X				XXXX	xx	18700875	-	250
0.937	1.312	0.343	0.938							X		X				XXXX	xx	18700937	-	312
1.000	1.250	0.206	1.001					X	X	X	X	X				XXXX	xx	12501000	-	187
1.000	1.250	0.275	1.001	X	X	X	X	X	X	X	X	X			X	XXXX	xx	12501000	-	250
1.000	1.312	0.241	1.001					X								XXXX	xx	15601000	-	219
1.000	1.312	0.275	1.001							X	X	X				XXXX	xx	15601000	-	250
1.000	1.375	0.275	1.001							X	X	X			X	XXXX	xx	18701000	-	250
1.000	1.375	0.343	1.001	X		X	X	X	X	X	X	X			X	XXXX	xx	18701000	-	312
1.000	1.500	0.275	1.001												X	XXXX	xx	25001000	-	250
1.000	1.500	0.413	1.001					X			X				X	XXXX	xx	25001000	-	375
1.125	1.375	0.138	1.126										X	X		XXXX	xx	12501125	-	125
1.125	1.375	0.275	1.126						X			X				XXXX	xx	12501125	-	250
1.125	1.500	0.275	1.126					X							X	XXXX	xx	18701125	-	250
1.125	1.500	0.343	1.126	X		X	X	X		X	X	X			X	XXXX	xx	18701125	-	312
1.125	1.500	0.413	1.126	X		X										XXXX	xx	18701125	-	375
1.125	1.625	0.413	1.126					X								XXXX	xx	25001125	-	375
1.187	1.562	0.343	1.188												X	XXXX	xx	18701187	-	312
1.250	1.500	0.275	1.251					X	X			X			X	XXXX	xx	12501250	-	250
1.250	1.562	0.240	1.251					X								XXXX	xx	15601250	-	218
1.250	1.625	0.275	1.251												X	XXXX	xx	18701250	-	250
1.250	1.625	0.343	1.251	X	X	X	X	X	X	X	X	X			X	XXXX	xx	18701250	-	312
1.250	1.625	0.413	1.251							X		X				XXXX	xx	18701250	-	375
1.250	1.750	0.413	1.251					X		X		X			X	XXXX	xx	25001250	-	375
1.375	1.625	0.206	1.376							X	X	X				XXXX	xx	12501375	-	187
1.375	1.625	0.275	1.376						X		X	X			X	XXXX	xx	12501375	-	250
1.375	1.687	0.241	1.376					X								XXXX	xx	15601375	-	219
1.375	1.687	0.275	1.376							X	X	X				XXXX	xx	15601375	-	250
1.375	1.687	0.343	1.376				X	X								XXXX	xx	15601375	-	312
1.375	1.750	0.275	1.376					X							X	XXXX	xx	18701375	-	250
1.375	1.750	0.343	1.376	X	X	X		X		X	X	X			X	XXXX	xx	18701375	-	312
1.375	1.875	0.413	1.376					X	X			X			X	XXXX	xx	25001375	-	375
1.500	1.750	0.206	1.501	X		X			X	X	X	X				XXXX	xx	12501500	-	187
1.500	1.750	0.275	1.501					X								XXXX	xx	12501500	-	250
1.500	1.875	0.275	1.501					X							X	XXXX	xx	18701500	-	250
1.500	1.875	0.309	1.501							X		X				XXXX	xx	18701500	-	281
1.500	1.875	0.343	1.501								X				X	XXXX	xx	18701500	-	312
1.500	1.875	0.413	1.501	X	X	X	X	X		X		X			X	XXXX	xx	18701500	-	375
1.500	2.000	0.343	1.501												X	XXXX	xx	25001500	-	312
1.500	2.000	0.413	1.501	X		X	X	X	X	X	X	X			X	XXXX	xx	25001500	-	375
1.562	1.937	0.343	1.563						X			X				XXXX	xx	18701562	-	312
1.625	2.000	0.309	1.626								X					XXXX	xx	18701625	-	281

*If used with wear rings, refer to wear ring throat diameter, see Section 9.
For custom groove calculations, see Appendix C.

09/01/07

Parker Hannifin Corporation
Engineered Polymer Systems Division
Phone: 801 972 3000

Table 5-12. BD, BT, BS, B3 and UR Gland Dimensions — Inch (Continued)

A Rod Diameter	B Groove Diameter	C Groove Width	D Throat Diameter*	Compounds (X = Standard Offering)												Part Number				
				BD				BT	BS				B3		UR	Compound Code	Profile Code		Energizer Code (BD)	
				4300	4700	5065	With Back-up	4300	4300	4700	4615	5065	4300	5065	4615					
1.625	2.000	0.413	1.626	X		X	X	X	X		X	X			X	XXXX	xx	18701625	-	375
1.625	2.125	0.413	1.626						X			X			X	XXXX	xx	25001625	-	375
1.750	2.125	0.275	1.751					X								XXXX	xx	18701750	-	250
1.750	2.125	0.343	1.751					X			X					XXXX	xx	18701750	-	312
1.750	2.125	0.413	1.751	X	X	X	X	X	X	X	X	X			X	XXXX	xx	18701750	-	375
1.750	2.250	0.413	1.751	X	X	X	X	X	X	X	X	X			X	XXXX	xx	25001750	-	375
1.750	2.375	0.550	1.752					X								XXXX	xx	31201750	-	500
1.875	2.250	0.343	1.876						X			X				XXXX	xx	18701875	-	312
1.875	2.250	0.413	1.876	X		X	X	X	X		X	X				XXXX	xx	18701875	-	375
2.000	2.250	0.206	2.001							X	X	X				XXXX	xx	12502000	-	187
2.000	2.375	0.275	2.001					X								XXXX	xx	18702000	-	250
2.000	2.375	0.309	2.001							X		X				XXXX	xx	18702000	-	281
2.000	2.375	0.343	2.001					X			X		X	X	X	XXXX	xx	18702000	-	312
2.000	2.375	0.413	2.001	X	X	X	X	X	X	X	X	X			X	XXXX	xx	18702000	-	375
2.000	2.500	0.413	2.001	X	X	X	X	X	X	X	X	X			X	XXXX	xx	25002000	-	375
2.000	2.625	0.550	2.002						X			X				XXXX	xx	31202000	-	500
2.125	2.500	0.413	2.126								X					XXXX	xx	18702125	-	375
2.125	2.625	0.413	2.126					X		X		X				XXXX	xx	25002125	-	375
2.250	2.625	0.206	2.251										X	X		XXXX	xx	18702250	-	187
2.250	2.625	0.309	2.251												X	XXXX	xx	18702250	-	281
2.250	2.625	0.343	2.251					X								XXXX	xx	18702250	-	312
2.250	2.625	0.413	2.251	X		X	X		X	X	X	X				XXXX	xx	18702250	-	375
2.250	2.750	0.413	2.251	X	X	X	X	X	X	X	X	X			X	XXXX	xx	25002250	-	375
2.250	2.875	0.413	2.252							X		X				XXXX	xx	31202250	-	375
2.250	2.875	0.550	2.252							X		X	X	X	X	XXXX	xx	31202250	-	500
2.250	2.875	0.877	2.252					X								XXXX	xx	31202250	-	797
2.375	2.875	0.413	2.376					X								XXXX	xx	25002375	-	375
2.500	2.875	0.413	2.501	X	X	X	X	X	X	X		X			X	XXXX	xx	18702500	-	375
2.500	2.937	0.309	2.501					X								XXXX	xx	21802500	-	281
2.500	2.937	0.343	2.501					X								XXXX	xx	21802500	-	312
2.500	2.937	0.413	2.501					X								XXXX	xx	21802500	-	375
2.500	3.000	0.413	2.501	X	X	X	X	X	X	X	X	X			X	XXXX	xx	25002500	-	375
2.500	3.125	0.550	2.502						X	X	X	X	X	X	X	XXXX	xx	31202500	-	500
2.625	3.000	0.413	2.626						X			X				XXXX	xx	18702625	-	375
2.625	3.125	0.413	2.626	X		X		X	X		X	X				XXXX	xx	25002625	-	375
2.750	3.125	0.309	2.751							X		X	X	X		XXXX	xx	18702750	-	281
2.750	3.250	0.413	2.751	X	X	X	X	X		X	X	X			X	XXXX	xx	25002750	-	375
2.750	3.375	0.550	2.752						X	X	X	X	X	X		XXXX	xx	31202750	-	500
2.750	3.500	0.688	2.752						X	X	X	X				XXXX	xx	37502750	-	625
2.875	3.250	0.206	2.876										X	X		XXXX	xx	18702875	-	187
2.875	3.250	0.413	2.876					X								XXXX	xx	18702875	-	375
2.875	3.375	0.413	2.876	X		X										XXXX	xx	25002875	-	375
3.000	3.375	0.309	3.001							X		X				XXXX	xx	18703000	-	281
3.000	3.375	0.413	3.001					X								XXXX	xx	18703000	-	375
3.000	3.437	0.309	3.001					X								XXXX	xx	21803000	-	281
3.000	3.500	0.413	3.001	X	X	X	X	X	X	X	X	X			X	XXXX	xx	25003000	-	375
3.000	3.625	0.550	3.002						X			X			X	XXXX	xx	31203000	-	500
3.000	3.750	0.550	3.002						X			X				XXXX	xx	37503000	-	500

*If used with wear rings, refer to wear ring throat diameter, see Section 9.
For custom groove calculations, see Appendix C.

09/01/07

Parker Hannifin Corporation
Engineered Polymer Systems Division
Phone: 801 972 3000
www.parkerseals.com

Table 5-12. BD, BT, BS, B3 and UR Gland Dimensions — Inch (Continued)

A Rod Diameter	B Groove Diameter	C Groove Width	D Throat Diameter*	Compounds (X = Standard Offering)												Part Number				
				BD				BT	BS				B3		UR	Compound Code	Profile Code		Energizer Code (BD)	
				4300	4700	5065	With Back-up	4300	4300	4700	4615	5065	4300	5065	4615					
3.000	3.750	0.688	3.002							X		X				XXXX	xx	37503000	-	625
3.250	3.625	0.413	3.251							X		X				XXXX	xx	18703250	-	375
3.250	3.750	0.413	3.251		X			X	X	X		X			X	XXXX	xx	25003250	-	375
3.500	3.875	0.309	3.501							X		X				XXXX	xx	18703500	-	281
3.500	3.875	0.413	3.501					X								XXXX	xx	18703500	-	375
3.500	4.000	0.343	3.501					X								XXXX	xx	25003500	-	312
3.500	4.000	0.413	3.501					X		X		X			X	XXXX	xx	25003500	-	375
3.500	4.125	0.550	3.502						X			X				XXXX	xx	31203500	-	500
3.500	4.250	0.550	3.502												X	XXXX	xx	37503500	-	500
3.500	4.250	0.688	3.502							X		X			X	XXXX	xx	37503500	-	625
3.750	4.250	0.413	3.751					X								XXXX	xx	25003750	-	375
3.750	4.375	0.550	3.752					X								XXXX	xx	31203750	-	500
3.875	4.250	0.343	3.876					X								XXXX	xx	18703785	-	312
3.875	4.750	0.825	3.877								X					XXXX	xx	43703875	-	750
4.000	4.375	0.413	4.001					X								XXXX	xx	18704000	-	375
4.000	4.500	0.343	4.001					X								XXXX	xx	25004000	-	312
4.000	4.500	0.413	4.001	X	X	X	X	X	X	X		X	X	X	X	XXXX	xx	25004000	-	375
4.000	4.500	0.618	4.001					X		X		X			X	XXXX	xx	25004000	-	562
4.000	4.625	0.413	4.002					X								XXXX	xx	31204000	-	375
4.000	4.750	0.688	4.002					X	X	X		X			X	XXXX	xx	37504000	-	625
4.250	4.625	0.309	4.251							X		X				XXXX	xx	18704250	-	281
4.250	4.750	0.413	4.251	X		X				X		X				XXXX	xx	25004250	-	375
4.250	4.750	0.618	4.251						X	X		X				XXXX	xx	25004250	-	562
4.250	5.000	0.688	4.252					X								XXXX	xx	37504250	-	625
4.250	5.000	0.784	4.252					X								XXXX	xx	37504250	-	713
4.500	5.000	0.343	4.501					X								XXXX	xx	25004500	-	312
4.500	5.000	0.413	4.501							X		X				XXXX	xx	25004500	-	375
4.500	5.125	0.413	4.502					X								XXXX	xx	31204500	-	375
4.500	5.125	0.550	4.502												X	XXXX	xx	31204500	-	500
4.500	5.250	0.688	4.502					X	X			X				XXXX	xx	37504500	-	625
4.625	5.250	0.688	4.627							X		X				XXXX	xx	31204625	-	625
4.750	5.375	0.550	4.752					X								XXXX	xx	31204750	-	500
4.750	5.625	0.825	4.752								X					XXXX	xx	43704750	-	750
5.000	5.375	0.309	5.001							X		X				XXXX	xx	18705000	-	281
5.000	5.375	0.413	5.001					X								XXXX	xx	18705000	-	375
5.000	5.500	0.413	5.001					X		X	X	X				XXXX	xx	25005000	-	375
5.000	5.500	0.618	5.001					X								XXXX	xx	25005000	-	562
5.000	5.500	0.792	5.001							X		X				XXXX	xx	25005000	-	720
5.000	5.562	0.378	5.001					X								XXXX	xx	28105000	-	344
5.000	5.562	0.550	5.001												X	XXXX	xx	28105000	-	500
5.000	5.750	0.550	5.002								X					XXXX	xx	37505000	-	500
5.000	5.750	0.688	5.002					X							X	XXXX	xx	37505000	-	625
5.250	6.000	0.688	5.252					X	X			X				XXXX	xx	37505250	-	625
5.500	6.125	0.413	5.502					X								XXXX	xx	31205500	-	375
5.500	6.250	0.688	5.502					X								XXXX	xx	37505500	-	625
5.750	6.250	0.413	5.751							X		X				XXXX	xx	25005750	-	375
6.000	6.500	0.618	6.001					X		X		X				XXXX	xx	25006000	-	562
6.000	6.500	0.792	6.001							X		X				XXXX	xx	25006000	-	720

*If used with wear rings, refer to wear ring throat diameter, see Section 9.
For custom groove calculations, see Appendix C.

09/01/07

Parker Hannifin Corporation
Engineered Polymer Systems Division
Phone: 801 972 3000

Table 5-12. BD, BT, BS, B3 and UR Gland Dimensions — Inch (Continued)

A Rod Diameter	B Groove Diameter	C Groove Width	D Throat Diameter*	Compounds (X = Standard Offering)												Part Number				
				BD				BT	BS				B3		UR	Compound Code	Profile Code		Energizer Code (BD)	
				4300	4700	5065	With Back-up	4300	4300	4700	4615	5065	4300	5065	4615					
6.000	6.750	0.688	6.002						X			X				XXXX	xx	37506000	-	625
6.500	7.000	0.413	6.501								X					XXXX	xx	25006500	-	375
6.500	7.500	0.688	6.502						X			X				XXXX	xx	50006500	-	625
6.750	7.375	0.550	6.752					X								XXXX	xx	31206750	-	500
6.750	7.500	0.688	6.752					X								XXXX	xx	37506750	-	625
7.000	7.500	0.618	7.001							X		X				XXXX	xx	25007000	-	562
7.000	8.000	0.825	7.002						X			X				XXXX	xx	50007000	-	750
7.500	8.250	0.688	7.502								X					XXXX	xx	37507500	-	625
7.500	8.500	0.688	7.502							X		X				XXXX	xx	50007500	-	625
8.000	8.750	0.688	8.002					X								XXXX	xx	37508000	-	625
8.500	9.000	0.413	8.501		X	X										XXXX	xx	25008500	-	375
8.500	9.250	0.688	8.502					X								XXXX	xx	37508500	-	625
8.500	9.500	0.688	8.502							X		X				XXXX	xx	50008500	-	625
9.000	9.500	0.413	9.001		X	X										XXXX	xx	25009000	-	375
9.000	10.000	0.825	9.002					X								XXXX	xx	50009000	-	750
9.500	10.250	0.688	9.502					X								XXXX	xx	37509500	-	625

*If used with wear rings, refer to wear ring throat diameter, see Section 9.
For custom groove calculations, see Appendix C.

NOTE: For sizes larger than those shown in the table, please contact your local Parker Seal representative.

Gland Dimensions — BD, BT, BS, B3 and UR Profiles — Metric

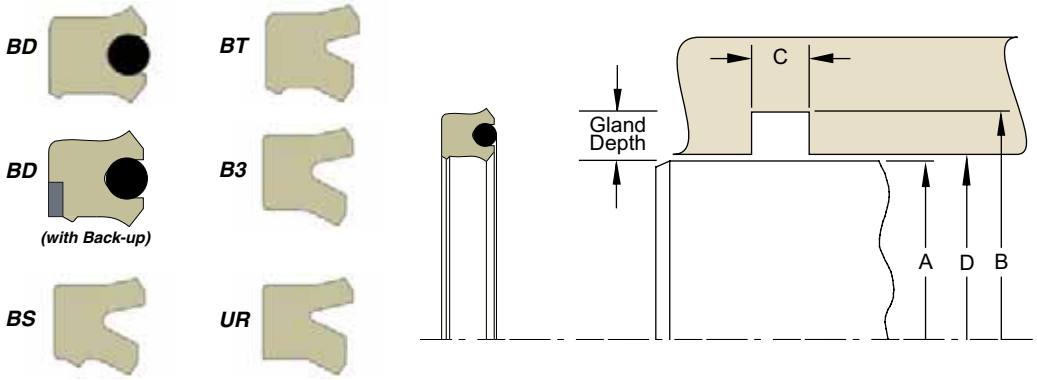

Table 5-13. BD, BT, BS, B3 and UR Gland Dimensions — Metric

A Rod Diameter	B Groove Diameter	C Groove Width	D Throat Diameter*	Compounds (X = Standard Offering)												Part Number				
				BD				BT	BS				B3		UR	Compound Code	Profile Code		Energizer Code (BD)	
				M300	M700	M065	With Back-up	M300	M300	M700	M615	M065	M300	M065	M615					
f7	H9	+.25/-.00	H8																	
For ISO tolerances refer to Appendix F.																				
12.0	19.0	5.6	12.0						X							XXXX	xx	03.5012	-	5
12.0	20.0	7.0	12.0						X							XXXX	xx	04.0012	-	6
22.0	30.0	6.3	22.0										X	X		XXXX	xx	04.0022	-	5.7
25.0	31.0	5.6	25.0										X	X		XXXX	xx	03.0025	-	5
25.0	35.0	8.0	25.0					X								XXXX	xx	05.0025	-	7.3
28.0	38.0	8.0	28.0					X								XXXX	xx	05.0028	-	7.3

*If used with wear rings, refer to wear ring throat diameter, see Section 9.
For custom groove calculations, see Appendix C.

09/01/07

Parker Hannifin Corporation
Engineered Polymer Systems Division
Phone: 801 972 3000

Table 5-13. BD, BT, BS, B3 and UR Gland Dimensions — Metric (Continued)

A Rod Diameter	B Groove Diameter	C Groove Width	D Throat Diameter*	Compounds (X = Standard Offering)												Part Number				
				BD				BT	BS				B3		UR	Compound Code	Profile Code		Energizer Code (BD)	
				M300	M700	M065	With Back-up	M300	M300	M700	M615	M065	M300	M065	M615					
f7	H9	+.25/-.00	H8																	
For ISO tolerances refer to Appendix F.																				
30.0	40.0	8.0	30.0										X	X		XXXX	xx	05.0030	-	7.3
32.0	42.0	8.0	32.0										X	X		XXXX	xx	05.0032	-	7.3
32.0	42.0	11.0	32.0							X	X	X				XXXX	xx	05.0032	-	10
35.0	45.0	8.0	35.0										X	X		XXXX	xx	05.0035	-	7.3
35.0	45.0	11.0	35.0							X		X				XXXX	xx	05.0035	-	10
36.0	46.0	8.0	36.0										X	X		XXXX	xx	05.0036	-	7.3
40.0	50.0	8.0	40.0							X		X	X	X		XXXX	xx	05.0040	-	7.3
40.0	50.0	9.0	40.0										X	X		XXXX	xx	05.0040	-	8
40.0	50.0	9.0	40.0						X			X				XXXX	xx	05.0040	-	8.18
40.0	50.0	11.0	40.0							X		X				XXXX	xx	05.0040	-	10
41.0	51.0	11.0	41.0							X	X	X				XXXX	xx	05.0041	-	10
45.0	55.0	7.0	45.0										X	X		XXXX	xx	05.0045	-	6
45.0	55.0	8.0	45.0										X	X		XXXX	xx	05.0045	-	7.3
45.0	60.0	11.0	45.0					X								XXXX	xx	07.5045	-	10
45.0	60.0	12.5	45.0							X		X				XXXX	xx	07.5045	-	11.4
48.0	58.0	11.0	48.0							X	X	X				XXXX	xx	05.0048	-	10
50.0	60.0	8.0	50.0					X	X			X				XXXX	xx	05.0050	-	7.3
55.0	65.0	8.0	55.0					X					X	X		XXXX	xx	05.0055	-	7.3
55.0	70.0	13.0	55.0					X								XXXX	xx	07.5055	-	12
60.0	70.0	8.0	60.0										X	X		XXXX	xx	05.0060	-	7.3
60.0	75.0	11.0	60.0								X					XXXX	xx	07.5060	-	10
60.0	75.0	13.0	60.0					X								XXXX	xx	07.5060	-	12
64.0	76.0	10.0	64.0										X	X		XXXX	xx	06.0064	-	9
65.0	75.0	8.0	65.0										X	X		XXXX	xx	05.0065	-	7.3
65.0	80.0	11.0	65.0						X	X		X				XXXX	xx	07.5065	-	10
70.0	80.0	13.0	70.0											X		XXXX	xx	05.0070	-	12
70.0	82.0	10.2	70.0										X	X		XXXX	xx	06.0070	-	9.2
70.0	83.0	11.0	70.0					X								XXXX	xx	06.5070	-	10
70.0	85.0	12.5	70.0							X		X				XXXX	xx	07.5070	-	11.4
75.0	88.0	11.0	75.0					X								XXXX	xx	06.5075	-	10
75.0	90.0	11.0	75.0										X	X		XXXX	xx	07.5075	-	10
80.0	93.0	11.0	80.0					X								XXXX	xx	06.5080	-	10
80.0	95.0	12.5	80.0							X		X				XXXX	xx	07.5080	-	11.4
85.0	100.0	10.0	85.0					X								XXXX	xx	07.5085	-	9
85.0	100.0	11.0	85.0					X								XXXX	xx	07.5085	-	10
85.0	100.0	13.2	85.0					X								XXXX	xx	07.5085	-	12
90.0	105.0	11.0	90.0					X								XXXX	xx	07.5090	-	10
95.0	110.0	12.5	95.0							X	X	X				XXXX	xx	07.5095	-	11.4
155.0	170.0	10.0	155.0					X								XXXX	xx	07.5155	-	9
195.0	207.0	17.0	195.0							X		X				XXXX	xx	06.0195	-	15.5

*If used with wear rings, refer to wear ring throat diameter, see Section 9.
For custom groove calculations, see Appendix C.

NOTE: For sizes larger than those shown in the table, please contact your local Parker Seal representative.

Parker Hannifin Corporation
Engineered Polymer Systems Division
Phone: 801 972 3000

E5 Profile, Premium Rounded Lip U-cup Rod Seal

Parker's E5 profile is a non-symmetrical rod seal designed to seal both lubricated and non-lubricated air. To ensure that critical surfaces retain lubrication, the radius edge of the lip is designed to hydroplane over pre-lubricated surfaces. The standard compound for the E5 profile is Parker's proprietary Nitroxile ELF compound N4274A85. This compound is formulated with proprietary internal lubricants to provide "Extreme Low Friction" and excellent wear resistance. This compound provides extended cycle life over standard nitrile and carboxylated nitrile compounds.

Technical Data

Standard Materials*	Temperature Range	Pressure Range†	Surface Speed
N4274A85	-10°F to 250°F (-23°C to 121°C)	250 psi (17 bar)	< 3 ft/s (1 m/s)
N4180A80	-40°F to 250°F (-40°C to 121°C)	250 psi (17 bar)	< 3 ft/s (1 m/s)
V4208A90	-5°F to 400°F (-21°C to 204°C)	250 psi (17 bar)	< 3 ft/s (1 m/s)
P5065A88	-70°F to 200°F (-57°C to 93°C)	250 psi (17 bar)	< 3 ft/s (1 m/s)

E5 Cross-Section

***Alternate Materials:** For applications that may require an alternate material, please contact your local Parker Seal representative.

†**Pressure Range** without wear rings (see Table 2-4, page 2-5).

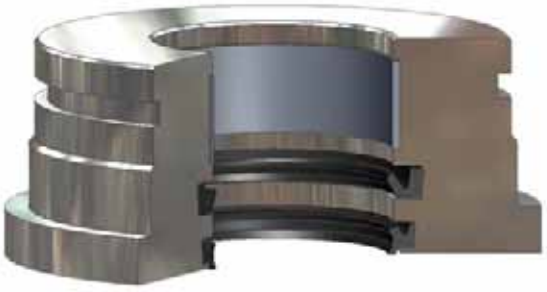

E5 Installed in Rod Gland

Parker Hannifin Corporation
Engineered Polymer Systems Division
Phone: 801 972 3000

Part Number Nomenclature — E5 Profile

Table 5-14. E5 Profile — Inch

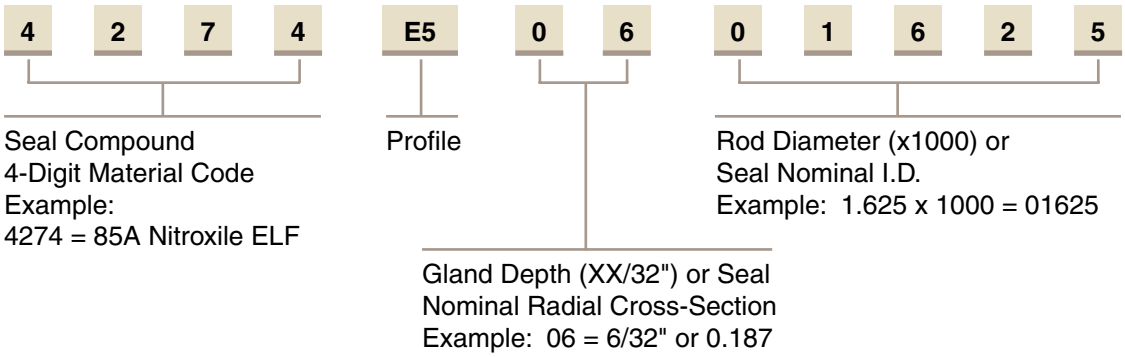

Gland Dimensions — E5 Profile

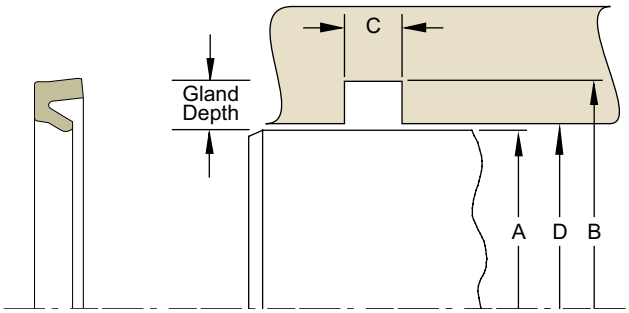

Table 5-15. Gland Dimension Tolerances

Nominal Gland Depth	A Rod Diameter	B Groove Diameter	C Groove Width	D Throat Diameter
1/8	+.000/-.001	+.002/-.000	+.015/-.000	+.002/-.000
3/16	+.000/-.002	+.002/-.000		+.002/-.000
1/4	+.000/-.002	+.003/-.000		+.003/-.000
5/16	+.000/-.002	+.004/-.000		+.003/-.000
3/8	+.000/-.002	+.005/-.000		+.004/-.000
7/16	+.000/-.003	+.006/-.000		+.004/-.000
1/2	+.000/-.003	+.007/-.000		+.005/-.000
5/8	+.000/-.003	+.009/-.000		+.006/-.000
3/4	+.000/-.004	+.011/-.000		+.007/-.000
1	+.000/-.005	+.015/-.000		+.009/-.000

Please refer to Engineering Section 2, Page 2-8 for surface finish and additional hardware considerations.

Table 5-16. E5 Gland Dimensions — Inch

A Rod Diameter	B Groove Diameter	C Groove Width	D Throat Diameter*	Compounds (X = Standard Offering)				Part Number	
				4180	4274	4208	5065	Compound Code	
0.125	0.375	0.156	0.126		X			XXXX	E50400125
0.187	0.375	0.125	0.188		X			XXXX	E50300187
0.250	0.500	0.156	0.251		X			XXXX	E50400250
0.375	0.625	0.156	0.376		X			XXXX	E50400375
0.500	0.750	0.156	0.501	X	X	X		XXXX	E50400500
0.625	0.875	0.156	0.626	X	X	X	X	XXXX	E50400625
0.750	1.000	0.156	0.751	X	X	X	X	XXXX	E50400750
0.875	1.125	0.156	0.876		X			XXXX	E50400875

*If used with wear rings, refer to wear ring throat diameter, see Section 9.
For custom groove calculations, see Appendix C.

09/01/07

Parker Hannifin Corporation
Engineered Polymer Systems Division
Phone: 801 972 3000
www.parkerseals.com

Table 5-16. E5 Gland Dimensions — Inch (Continued)

A Rod Diameter	B Groove Diameter	C Groove Width	D Throat Diameter*	Compounds (X = Standard Offering)				Part Number	
				4180	4274	4208	5065	Compound Code	
1.000	1.250	0.156	1.001		X	X	X	XXXX	E50401000
1.000	1.312	0.188	1.001		X	X	X	XXXX	E50501000
1.250	1.500	0.156	1.251		X			XXXX	E50401250
1.250	1.562	0.188	1.251	X	X			XXXX	E50501250
1.375	1.687	0.188	1.376		X	X		XXXX	E50501375
1.375	1.750	0.218	1.377	X	X	X	X	XXXX	E50601375
1.500	1.875	0.218	1.502		X			XXXX	E50601500
1.750	2.125	0.218	1.752		X	X		XXXX	E50601750
2.000	2.375	0.218	2.002		X	X		XXXX	E50602000
2.500	2.875	0.218	2.502		X			XXXX	E50602500

*If used with wear rings, refer to wear ring throat diameter, see Section 9.
For custom groove calculations, see Appendix C.

NOTE: For sizes larger than those shown in the table, please contact your local Parker Seal representative.

Part Number Nomenclature — E5 Profile

Table 5-17. E5 Profile — Metric

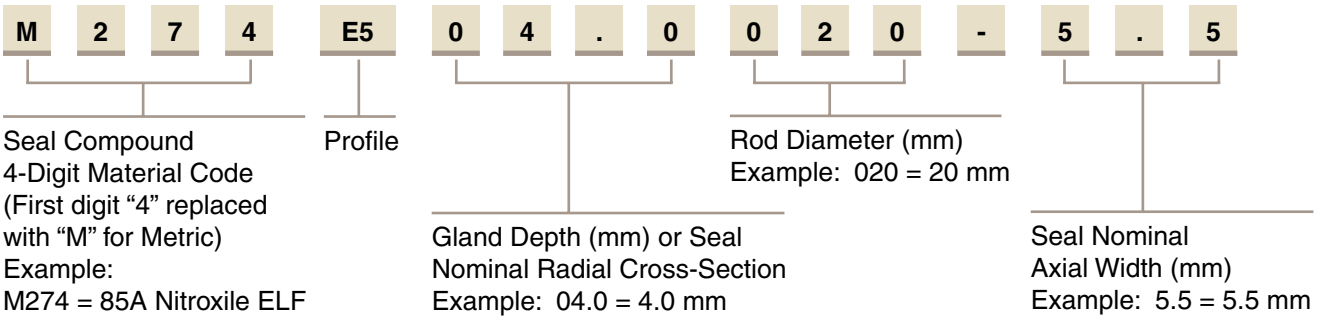

Gland Dimensions — E5 Profile

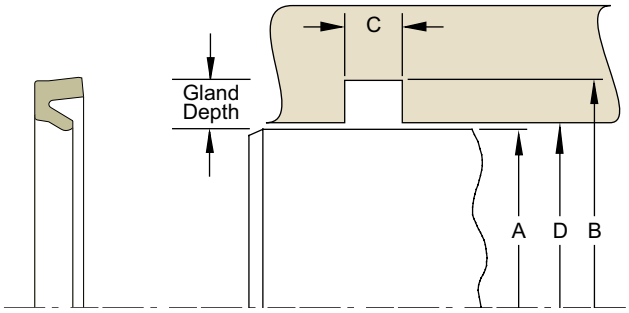

Table 5-18. E5 Gland Dimensions — Metric (mm)

A Rod Diameter	B Groove Diameter	C Groove Width	D Throat Diameter*	Compounds (X = Standard Offering)				Part Number	
				M180	M274	M208	M065	Compound Code	
f7	H9	+.25/-.00	H8						
For ISO tolerances refer to Appendix F.									
14.0	22.0	5.5	14.0	X				XXXX	E504.0014-5
20.0	28.0	6.0	20.0		X			XXXX	E504.0020-5.5
25.0	35.0	7.5	25.0		X			XXXX	E505.0025-7
30.0	38.0	5.0	30.0		X			XXXX	E504.0030-4.3
50.0	60.0	10.5	50.0		X	X		XXXX	E505.0050-9.5

*If used with wear rings, refer to wear ring throat diameter, see Section 9.
For custom groove calculations, see Appendix C.

NOTE: For sizes larger than those shown in the table, please contact your local Parker Seal representative.

09/01/07

Parker Hannifin Corporation
Engineered Polymer Systems Division
Phone: 801 972 3000

TR Profile (Rod T-seal) Compact Seal with Anti-Extrusion Technology

Parker's rod T-seal is designed to retrofit o-rings in no back-up, single back-up and two back-up standard industrial reciprocating glands. Its compact design provides improved stability and extrusion resistance in dynamic fluid sealing applications. The flange or base of the T-seal forms a tight seal in the gland and supports the anti-extrusion back-up rings. When energized, the back-up rings bridge the extrusion gap to protect the rubber sealing element from extrusion and system contamination. The rod T-seal eliminates the spiral or twisting failure that can occur when o-rings are used against a dynamic surface. Parker offers the rod T-seal in a variety of elastomer and back-up ring compounds to cover a wide range of fluid compatibility, pressure and temperature requirements.

Profile **TR0** for **no** back-up o-ring gland (standard offering)
Profile **TRS** for **single** back-up o-ring gland
Profile **TRT** for **two** back-up o-ring gland

The TR profile is sold only as an assembly (elastomer and back-ups).

Technical Data

Standard Materials

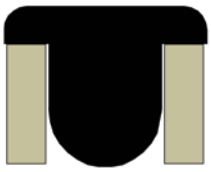

TR Cross-Section

Base Elastomer*	Temperature Range	Surface Speed
N4115A75	-40°F to 225F (-40°C to 107°C)	< 1.6 ft/s (0.5 m/s)
N4274A85	-10°F to 250°F (-23°C to 121°C)	< 1.6 ft/s (0.5 m/s)
V4205A75	-20°F to 400°F (-29°C to 204°C)	< 1.6 ft/s (0.5 m/s)
E4259A80	-65°F to 300°F (-54°C to 149°C)	< 1.6 ft/s (0.5 m/s)

***Alternate Materials:** For applications that may require an alternate material, please contact your local Parker Seal representative.

TR Installed in Rod Gland

Parker Hannifin Corporation
Engineered Polymer Systems Division
Phone: 801 972 3000

Technical Data (Continued)

Standard Materials

Back-up Rings**	Temperature Range	Pressure Range†
B001 (Nylatron)	-65°F to 250°F (-54°C to 121°C)	5,000 psi (344 bar)
B011 (Virgin PTFE)	-20°F to 250°F (-29°C to 121°C)	3,000 psi (206 bar)
B085 (PEEK)	-65°F to 500°F (-54°C to 260°C)	10,000 psi (689 bar)

****Alternate Materials:** For applications that may require an alternate material, please see Section 3 for alternate materials.

†Pressure Range without wear rings (see Table 2-4, page 2-5).

Part Number Nomenclature — TR Profile

Table 5-19. TR Profile — Inch

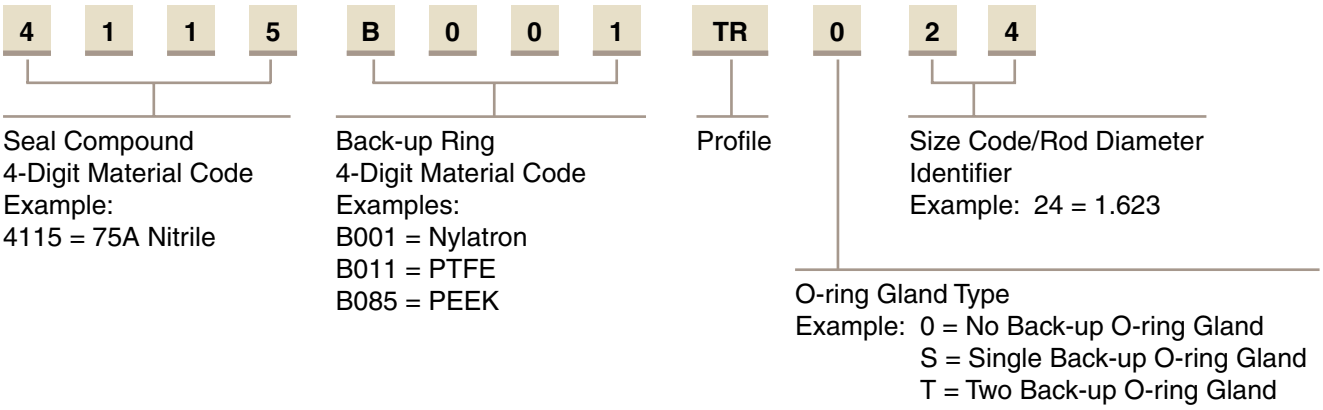

Gland Dimensions — TR Profile

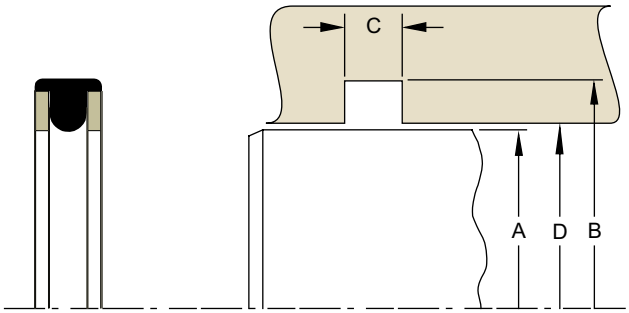

Please refer to Engineering Section 2, Page 2-8 for surface finish and additional hardware considerations.

Table 5-20. TR Gland Dimensions — Inch

A Rod Diameter	B Groove Diameter	C			D Throat Diameter*	Ref O-ring Dash Number	Compounds (X = Standard Offering)				Part Number			
		TR0 Groove Width	TRS Groove Width	TRT Groove Width			4115	4274	4205	4259	Com-pound Code	Back-up Ring Code	Groove Width Code**	Size Code
+.000/ -.002	+.002/ -.000	+.005/ -.000	+.005/ -.000	+.005/ -.000	+.001/ -.000									
0.186	0.362	0.140	0.171	0.238	0.188	106	X		X		XXXX	B0XX	TR0	01
0.249	0.425	0.140	0.171	0.238	0.251	108	X		X		XXXX	B0XX	TR0	02
0.311	0.487	0.140	0.171	0.238	0.313	109	X		X		XXXX	B0XX	TR0	03
0.373	0.615	0.187	0.208	0.275	0.376	204	X	X	X		XXXX	B0XX	TR0	04

* If used with wear rings, refer to wear ring throat diameter, see Section 9.
**Chart reflects availability for TR0 only. For availability of TRS and TRT, please contact your local Parker Seal representative.
For custom groove calculations, see Appendix C.

09/01/07

Parker Hannifin Corporation
Engineered Polymer Systems Division
Phone: 801 972 3000

Table 5-20. TR Gland Dimensions — Inch** (Continued)

A Rod Diameter	B Groove Diameter	C			D Throat Diameter*	Ref O-ring Dash Number	Compounds (X = Standard Offering)				Part Number			
		TR0 Groove Width	TRS Groove Width	TRT Groove Width			4115	4274	4205	4259	Com-pound Code	Back-up Ring Code	Groove Width Code**	Size Code
+.000/ -.002	+.002/ -.000	+.005/ -.000	+.005/ -.000	+.005/ -.000	+.001/ -.000									
0.435	0.677	0.187	0.208	0.275	0.438	205	X		X		XXXX	B0XX	TR0	05
0.498	0.740	0.187	0.208	0.275	0.501	206	X	X	X		XXXX	B0XX	TR0	06
0.560	0.802	0.187	0.208	0.275	0.563	207	X		X		XXXX	B0XX	TR0	07
0.623	0.865	0.187	0.208	0.275	0.626	208	X	X	X	X	XXXX	B0XX	TR0	08
0.685	0.927	0.187	0.208	0.275	0.688	209	X				XXXX	B0XX	TR0	09
0.748	0.990	0.187	0.208	0.275	0.751	210	X	X	X	X	XXXX	B0XX	TR0	10
0.810	1.052	0.187	0.208	0.275	0.813	211	X		X		XXXX	B0XX	TR0	11
0.873	1.065	0.187	0.208	0.275	0.876	212	X		X		XXXX	B0XX	TR0	12
0.935	1.177	0.187	0.208	0.275	0.938	213	X		X		XXXX	B0XX	TR0	13
0.998	1.240	0.187	0.208	0.275	1.001	214	X	X	X		XXXX	B0XX	TR0	14
1.060	1.302	0.187	0.208	0.275	1.063	215	X				XXXX	B0XX	TR0	15
1.123	1.365	0.187	0.208	0.275	1.126	216	X		X	X	XXXX	B0XX	TR0	16
1.185	1.427	0.187	0.208	0.275	1.188	217	X		X		XXXX	B0XX	TR0	17
1.248	1.490	0.187	0.208	0.275	1.251	218	X	X	X	X	XXXX	B0XX	TR0	18
1.310	1.552	0.187	0.208	0.275	1.313	219	X				XXXX	B0XX	TR0	19
1.373	1.615	0.187	0.208	0.275	1.376	220	X		X	X	XXXX	B0XX	TR0	20
1.435	1.677	0.187	0.208	0.275	1.438	221	X	X			XXXX	B0XX	TR0	21
1.498	1.740	0.187	0.208	0.275	1.501	222	X	X	X	X	XXXX	B0XX	TR0	22
1.498	1.868	0.281	0.311	0.410	1.501	325	X		X		XXXX	B0XX	TR0	23
1.623	1.993	0.281	0.311	0.410	1.626	326	X	X			XXXX	B0XX	TR0	24
1.748	2.118	0.281	0.311	0.410	1.751	327	X	X	X		XXXX	B0XX	TR0	25
1.873	2.243	0.281	0.311	0.410	1.876	328	X	X			XXXX	B0XX	TR0	26
1.998	2.368	0.281	0.311	0.410	2.001	329	X		X	X	XXXX	B0XX	TR0	27
2.123	2.493	0.281	0.311	0.410	2.126	330	X		X		XXXX	B0XX	TR0	28
2.248	2.618	0.281	0.311	0.410	2.251	331	X	X			XXXX	B0XX	TR0	29
2.373	2.743	0.281	0.311	0.410	2.376	332	X		X		XXXX	B0XX	TR0	30
2.498	2.868	0.281	0.311	0.410	2.501	333	X	X	X		XXXX	B0XX	TR0	31
2.623	2.993	0.281	0.311	0.410	2.626	334	X		X		XXXX	B0XX	TR0	32
2.748	3.118	0.281	0.311	0.410	2.751	335	X	X	X		XXXX	B0XX	TR0	33
2.873	3.243	0.281	0.311	0.410	2.876	336	X				XXXX	B0XX	TR0	34
2.998	3.368	0.281	0.311	0.410	3.001	337	X				XXXX	B0XX	TR0	35
3.123	3.493	0.281	0.311	0.410	3.126	338	X				XXXX	B0XX	TR0	36
3.248	3.618	0.281	0.311	0.410	3.251	339	X		X		XXXX	B0XX	TR0	37
3.373	3.743	0.281	0.311	0.410	3.376	340	X		X		XXXX	B0XX	TR0	38
3.498	3.868	0.281	0.311	0.410	3.501	341	X				XXXX	B0XX	TR0	39
3.623	3.993	0.281	0.311	0.410	3.626	342	X				XXXX	B0XX	TR0	40
3.748	4.118	0.281	0.311	0.410	3.751	343	X		X		XXXX	B0XX	TR0	41
3.873	4.243	0.281	0.311	0.410	3.876	344	X				XXXX	B0XX	TR0	42
3.998	4.368	0.281	0.311	0.410	4.001	345	X		X		XXXX	B0XX	TR0	43
4.123	4.493	0.281	0.311	0.410	4.126	346	X				XXXX	B0XX	TR0	44
4.248	4.618	0.281	0.311	0.410	4.251	347	X		X		XXXX	B0XX	TR0	45
4.373	4.743	0.281	0.311	0.410	4.376	348	X				XXXX	B0XX	TR0	46
4.498	4.868	0.281	0.311	0.410	4.501	349	X		X		XXXX	B0XX	TR0	47
4.997	5.471	0.375	0.408	0.538	5.001	429	X		X	X	XXXX	B0XX	TR0	48
5.247	5.721	0.375	0.408	0.538	5.251	431	X				XXXX	B0XX	TR0	49
5.497	5.971	0.375	0.408	0.538	5.501	433	X				XXXX	B0XX	TR0	50

* If used with wear rings, refer to wear ring throat diameter, see Section 9.
**Chart reflects availability for TR0 only. For availability of TRS and TRT, please contact your local Parker Seal representative.
For custom groove calculations, see Appendix C.

09/01/07

Parker Hannifin Corporation
Engineered Polymer Systems Division
Phone: 801 972 3000

Table 5-20. TR Gland Dimensions — Inch** (Continued)

A Rod Diameter	B Groove Diameter	C			D Throat Diameter*	Ref O-ring Dash Number	Compounds (X = Standard Offering)				Part Number			
		TR0 Groove Width	TRS Groove Width	TRT Groove Width			4115	4274	4205	4259	Com-pound Code	Back-up Ring Code	Groove Width Code**	Size Code
+.000/ -.002	+.002/ -.000	+.005/ -.000	+.005/ -.000	+.005/ -.000	+.001/ -.000									
5.622	6.096	0.375	0.408	0.538	5.626	434	X				XXXX	B0XX	TR0	51
5.997	6.471	0.375	0.408	0.538	6.001	437	X				XXXX	B0XX	TR0	52
6.247	6.721	0.375	0.408	0.538	6.251	438	X				XXXX	B0XX	TR0	53
6.497	6.971	0.375	0.408	0.538	6.501	439	X		X		XXXX	B0XX	TR0	54
6.747	7.221	0.375	0.408	0.538	6.751	440	X				XXXX	B0XX	TR0	55
6.997	7.471	0.375	0.408	0.538	7.001	441	X				XXXX	B0XX	TR0	56
7.247	7.721	0.375	0.408	0.538	7.251	442	X				XXXX	B0XX	TR0	57
7.497	7.971	0.375	0.408	0.538	7.501	443	X		X		XXXX	B0XX	TR0	58
7.997	8.471	0.375	0.408	0.538	8.001	445	X				XXXX	B0XX	TR0	59
8.997	9.471	0.375	0.408	0.538	9.001	447	X				XXXX	B0XX	TR0	60
9.497	9.971	0.375	0.408	0.538	9.501	448	X				XXXX	B0XX	TR0	61
9.997	10.471	0.375	0.408	0.538	10.001	449	X				XXXX	B0XX	TR0	62
10.997	11.471	0.375	0.408	0.538	11.001	451	X				XXXX	B0XX	TR0	63
11.497	11.971	0.375	0.408	0.538	11.501	452					XXXX	B0XX	TR0	64
11.997	12.471	0.375	0.408	0.538	12.001	453	X				XXXX	B0XX	TR0	65

* If used with wear rings, refer to wear ring throat diameter, see Section 9.
**Chart reflects availability for TR0 only. For availability of TRS and TRT, please contact your local Parker Seal representative.
For custom groove calculations, see Appendix C.

NOTE: For sizes larger than those shown in the table, please contact your local Parker Seal representative.

Parker Hannifin Corporation
Engineered Polymer Systems Division
Phone: 801 972 3000

ON Profile, PTFE Rod Cap Seal

The Parker ON profile is a bi-directional PTFE rod seal for use in low to medium duty hydraulic systems. The ON profile is a simple two piece design comprised of a standard size Parker o-ring energizing a wear resistant PTFE cap. The ON profile offers long wear and low friction, and because of its short assembly length, requires minimal space in the rod housing. The seal is commonly used in applications such as mobile hydraulics, machine tools, injection molding machines and hydraulic presses. Parker's ON profile will retrofit non-Parker seals of similar design.

The ON profile may be ordered without the energizer by omitting the energizer code. See part number nomenclature.

Technical Data

Standard Materials*		Temperature Range	Pressure Range†	Surface Speed
Cap				
0401	40% bronze-filled PTFE	-200°F to 575°F (-129°C to 302°C)	5000 psi (344 bar)	< 13 ft/s (4 m/sec)
Energizer				
A	70A Nitrile	-30°F to 250°F (-34°C to 121°C)		

***Alternate Materials:** For applications that may require an alternate material, please see Section 3 for alternate PTFE (Table 3-4) and energizer (Table 3-5) materials.

†Pressure Range without wear rings (see Table 2-4, page 2-5).

ON Cross-Section

Options

Notched side walls: Notches can be added to the side walls of the PTFE cap. This can help to optimize the seal's response to fluid pressure. Notched side walls help ensure that fluid pressure fills the cavity between the side face of the seal and the side face of the seal gland. Consult your local Parker Seal representative for the availability and cost to add side notches to the ON profile.

N = Notched walls

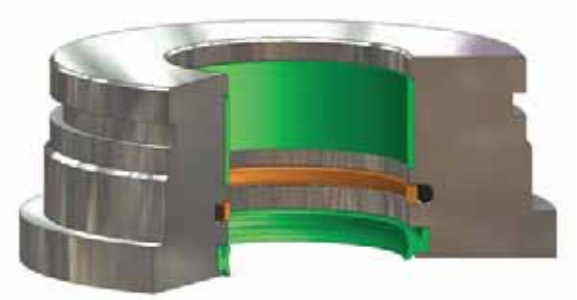

ON installed in Rod Gland

Parker Hannifin Corporation
Engineered Polymer Systems Division
Phone: 801 972 3000

Part Number Nomenclature — ON Profile

Table 5-21. ON Profile — Inch

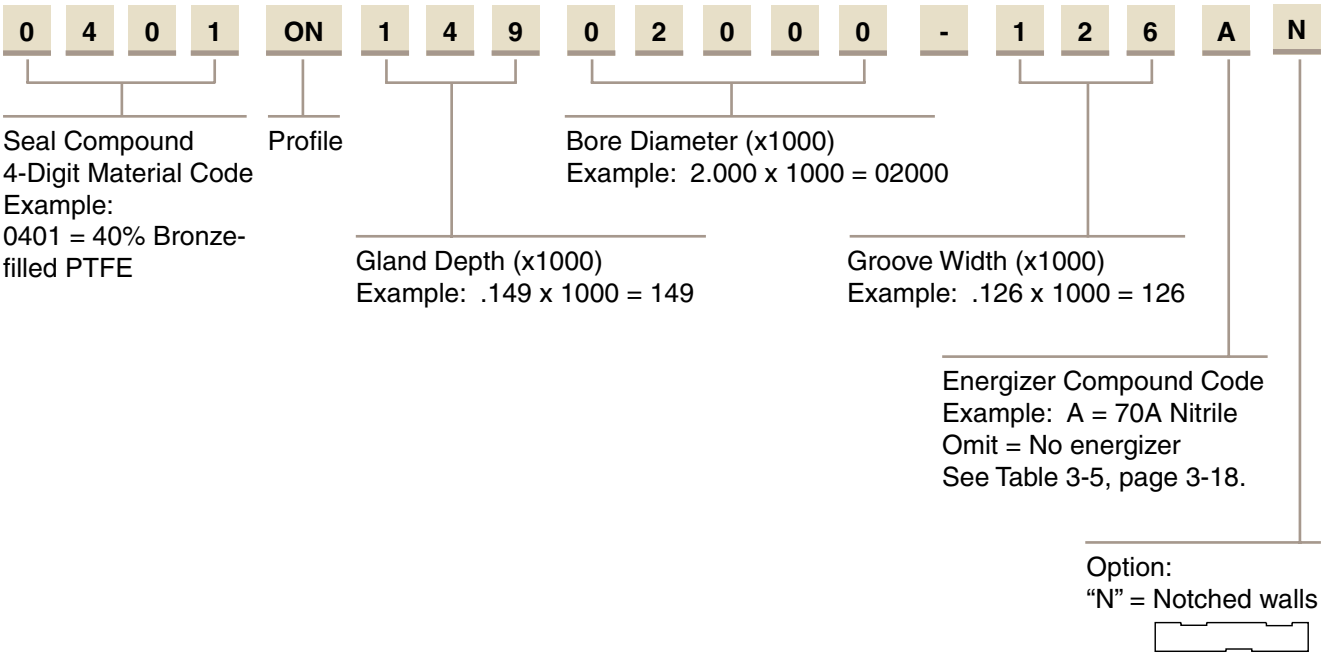

Gland Dimensions — ON Profile

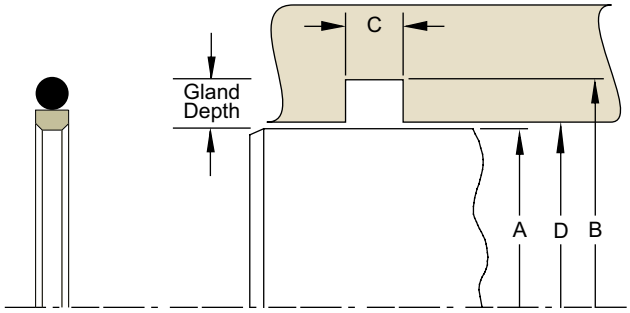

Please refer to Engineering Section 2, Page 2-8 for surface finish and additional hardware considerations.

Table 5-23. ON Profile — Inch

A Rod Diameter	B Groove Diameter	C Groove Width	D Throat Diameter*	O-ring Dash Number	Part Number
+.000/-.001	+.001/-.000	+.005/-.000	+.001/-.000		
0.500	0.674	0.081	0.501	015	**0401ON08700500-081A**
0.562	0.736	0.081	0.563	016	**0401ON08700562-081A**
0.625	0.799	0.081	0.626	017	**0401ON08700625-081A**
0.687	0.861	0.081	0.688	018	**0401ON08700687-081A**
0.750	0.924	0.081	0.751	019	**0401ON08700750-081A**
0.812	0.986	0.081	0.813	020	**0401ON08700812-081A**
0.875	1.049	0.081	0.876	021	**0401ON08700875-081A**
0.937	1.111	0.081	0.938	022	**0401ON08700937-081A**

*If used with wear rings, refer to wear ring throat diameter, see Section 9.
For custom groove calculations, see Appendix C.

Parker Hannifin Corporation
Engineered Polymer Systems Division
Phone: 801 972 3000

Table 5-23. ON Gland Dimensions — Inch

A Rod Diameter	B Groove Diameter	C Groove Width	D Throat Diameter*	O-ring Dash Number	Part Number
+.000/-.002	**+.002/-.000**	**+.005/-.000**	**+.002/-.000**		
1.000	1.298	0.126	1.001	122	**0401ON14901000-126A**
1.062	1.360	0.126	1.063	123	**0401ON14901062-126A**
1.125	1.423	0.126	1.126	124	**0401ON14901125-126A**
1.187	1.485	0.126	1.188	125	**0401ON14901187-126A**
1.250	1.548	0.126	1.251	126	**0401ON14901250-126A**
1.312	1.610	0.126	1.313	127	**0401ON14901312-126A**
1.375	1.673	0.126	1.376	128	**0401ON14901375-126A**
1.437	1.735	0.126	1.438	129	**0401ON14901437-126A**
1.500	1.798	0.126	1.501	130	**0401ON14901500-126A**
1.562	1.860	0.126	1.563	131	**0401ON14901562-126A**
1.625	1.923	0.126	1.626	132	**0401ON14901625-126A**
1.687	1.985	0.126	1.688	133	**0401ON14901687-126A**
1.750	2.048	0.126	1.751	134	**0401ON14901750-126A**
1.875	2.173	0.126	1.876	136	**0401ON14901875-126A**
+.000/-.003	**+.003/-.000**	**+.005/-.000**	**+.003/-.000**		
2.000	2.424	0.166	2.001	228	**0401ON21202000-166A**
2.125	2.549	0.166	2.126	228	**0401ON21202125-166A**
2.250	2.674	0.166	2.251	229	**0401ON21202250-166A**
2.375	2.799	0.166	2.376	230	**0401ON21202375-166A**
2.500	2.924	0.166	2.501	231	**0401ON21202500-166A**
2.625	3.049	0.166	2.626	232	**0401ON21202625-166A**
2.750	3.174	0.166	2.751	233	**0401ON21202750-166A**
2.875	3.299	0.166	2.876	234	**0401ON21202875-166A**
3.000	3.424	0.166	3.001	235	**0401ON21203000-166A**
3.125	3.549	0.166	3.126	236	**0401ON21203125-166A**
3.250	3.674	0.166	3.251	237	**0401ON21203250-166A**
3.375	3.799	0.166	3.376	238	**0401ON21203375-166A**
3.500	3.924	0.166	3.501	239	**0401ON21203500-166A**
3.625	4.049	0.166	3.626	240	**0401ON21203625-166A**
3.750	4.174	0.166	3.751	241	**0401ON21203750-166A**
3.875	4.299	0.166	3.876	242	**0401ON21203875-166A**
+.000/-.004	**+.004/-.000**	**+.005/-.000**	**+.004/-.000**		
4.000	4.616	0.247	4.002	347	**0401ON30804000-247A**
4.125	4.741	0.247	4.127	348	**0401ON30804125-247A**
4.250	4.866	0.247	4.252	349	**0401ON30804250-247A**
4.375	4.991	0.247	4.377	350	**0401ON30804375-247A**
4.500	5.116	0.247	4.502	351	**0401ON30804500-247A**
4.625	5.241	0.247	4.627	352	**0401ON30804625-247A**
4.750	5.366	0.247	4.752	353	**0401ON30804750-247A**
4.875	5.491	0.247	4.877	354	**0401ON30804875-247A**
5.000	5.616	0.247	5.002	355	**0401ON30805000-247A**
5.125	5.741	0.247	5.127	356	**0401ON30805125-247A**
5.250	5.866	0.247	5.252	357	**0401ON30805250-247A**
5.375	5.991	0.247	5.377	358	**0401ON30805375-247A**
5.500	6.116	0.247	5.502	359	**0401ON30805500-247A**
5.625	6.241	0.247	5.627	360	**0401ON30805625-247A**
5.750	6.366	0.247	5.752	361	**0401ON30805750-247A**
5.875	6.491	0.247	5.877	361	**0401ON30805875-247A**

*If used with wear rings, refer to wear ring throat diameter, see Section 9.
For custom groove calculations, see Appendix C.

Parker Hannifin Corporation
Engineered Polymer Systems Division
Phone: 801 972 3000

Table 5-23. ON Gland Dimensions — Inch (Continued)

A Rod Diameter	B Groove Diameter	C Groove Width	D Throat Diameter*	O-ring Dash Number	Part Number
+.000/-.004	**+.004/-.000**	**+.005/-.000**	**+.004/-.000**		
6.000	6.616	0.247	6.002	362	**0401ON30806000-247A**
6.125	6.741	0.247	6.127	362	**0401ON30806125-247A**
6.250	6.866	0.247	6.252	363	**0401ON30806250-247A**
6.375	6.991	0.247	6.377	363	**0401ON30806375-247A**
6.500	7.116	0.247	6.502	364	**0401ON30806500-247A**
6.750	7.366	0.247	6.752	365	**0401ON30806750-247A**
7.000	7.616	0.247	7.002	366	**0401ON30807000-247A**
7.250	7.866	0.247	7.252	367	**0401ON30807250-247A**
7.500	8.116	0.247	7.502	368	**0401ON30807500-247A**
7.750	8.366	0.247	7.752	369	**0401ON30807750-247A**
+.000/-.005	**+.005/-.000**	**+.005/-.000**	**+.005/-.000**		
8.000	8.830	0.320	8.002	445	**0401ON41508000-320A**
8.250	9.080	0.320	8.252	446	**0401ON41508250-320A**
8.500	9.330	0.320	8.502	446	**0401ON41508500-320A**
9.000	9.830	0.320	9.002	447	**0401ON41509000-320A**
9.500	10.330	0.320	9.502	448	**0401ON41509500-320A**
10.000	10.830	0.320	10.002	449	**0401ON41510000-320A**
10.500	11.330	0.320	10.502	450	**0401ON41510500-320A**
11.000	11.830	0.320	11.002	451	**0401ON41511000-320A**
11.500	12.330	0.320	11.502	452	**0401ON41511500-320A**
12.000	12.830	0.320	12.002	453	**0401ON41512000-320A**
12.500	13.330	0.320	12.502	454	**0401ON41512500-320A**
13.000	13.830	0.320	13.002	455	**0401ON41513000-320A**
13.500	14.330	0.320	13.502	456	**0401ON41513500-320A**
14.000	14.830	0.320	14.002	457	**0401ON41514000-320A**
14.500	15.330	0.320	14.502	458	**0401ON41514500-320A**
15.000	15.830	0.320	15.002	459	**0401ON41515000-320A**
15.500	16.330	0.320	15.502	460	**0401ON41515500-320A**
16.000	16.830	0.320	16.002	461	**0401ON41516000-320A**

*If used with wear rings, refer to wear ring throat diameter, see Section 9.
For custom groove calculations, see Appendix C.

NOTE: For sizes larger than those shown in the table, please contact your local Parker Seal representative.

Parker Hannifin Corporation
Engineered Polymer Systems Division
Phone: 801 972 3000

CR Profile, PTFE Rod Cap Seal to Retrofit O-ring Glands

The Parker CR profile is a cap seal with anti-extrusion, low friction and low wear features. The seal is a bi-directional rod seal for use in pneumatic and low to medium duty applications. Because of its short assembly length, it requires minimal space in the rod housing. The three CR profiles will fit into standard o-ring grooves without modification. Parker's CR profiles will retrofit non-Parker seals of similar design.

- CR0 fits a standard o-ring groove
- CR1 fits an o-ring groove designed for one back-up ring
- CR2 fits an o-ring groove designed for two back-up rings

The CR profile may be ordered without the energizer by omitting the energizer code. See part number nomenclature.

Technical Data

Standard Materials*		Temperature Range	Pressure Range†	Surface Speed
Cap				
0401	40% bronze filled PTFE	-200°F to 575°F (-129°C to 302°C)	5000 psi (344 bar)	< 13 ft/s (4 m/sec)
Energizer				
A	70A Nitrile	-30°F to 250°F (-34°C to 121°C)		

CR Cross-Section

***Alternate Materials:** For pneumatic applications, compound 0102 is recommended. For applications that may require an alternate material, please see Section 3 for alternate PTFE (Table 3-4) and energizer (Table 3-5) materials.

†**Pressure Range** without wear rings (see Table 2-4, page 2-5).

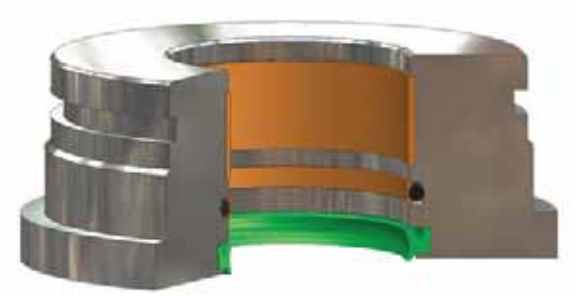

CR installed in Rod Gland

Parker Hannifin Corporation
Engineered Polymer Systems Division
Phone: 801 972 3000

Technical Data (Continued)

Options

Notched side walls: Notches can be added to the side walls of the PTFE cap. This can help to optimize the seal's response to fluid pressure. Notched side walls help ensure that fluid pressure fills the cavity between the side face of the seal and the side face of the seal gland. Consult your local Parker Seal representative for the availability and cost to add side notches to the CR profile.

N = Notched walls

Part Number Nomenclature — CR Profile

Table 5-24. CR Profile — Inch

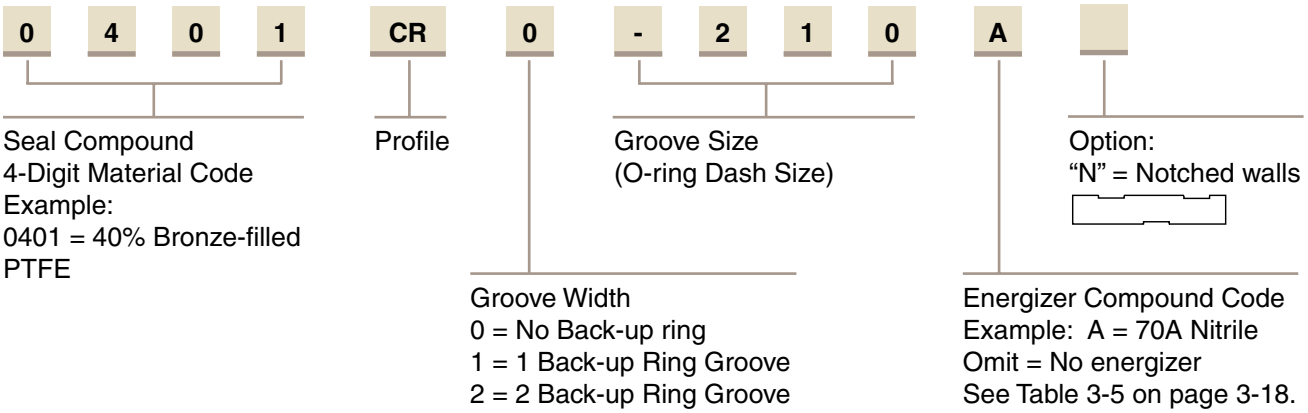

5

Gland Dimensions — CR Profile

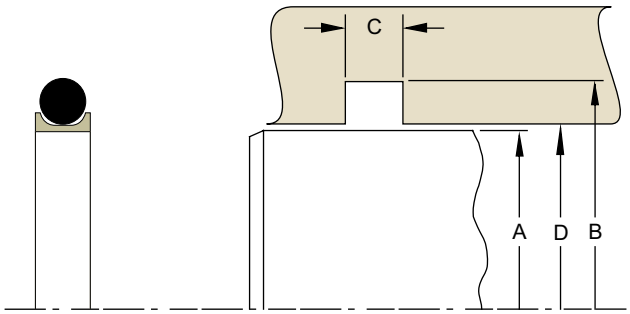

Please refer to Engineering Section 2, Page 2-8 for surface finish and additional hardware considerations.

Table 5-25. CR Profile — Inch

A Rod Diameter	B Groove Diameter	C Groove Width (CR0)	C Groove Width (CR1)	C Groove Width (CR2)	D Throat Diameter*	O-ring Dash Number	CR Part Number (X = Groove Width of 0, 1 or 2)
+.000/-.002	+.002/-.000	+.005/-.000	+.005/-.000	+.005/-.000	+001/-.000		
0.125	0.235	0.093	0.138	0.205	0.126	006	**0401CR X-006A**
0.156	0.266	0.093	0.138	0.205	0.157	007	**0401CR X-007A**
0.187	0.297	0.093	0.138	0.205	0.188	008	**0401CR X-008A**
0.219	0.329	0.093	0.138	0.205	0.220	009	**0401CR X-009A**
0.250	0.360	0.093	0.138	0.205	0.251	010	**0401CR X-010A**
0.312	0.422	0.093	0.138	0.205	0.313	011	**0401CR X-011A**
0.375	0.485	0.093	0.138	0.205	0.376	012	**0401CR X-012A**

*If used with wear rings, refer to wear ring throat diameter, see Section 9.
For custom groove calculations, see Appendix C.

09/01/07

Parker Hannifin Corporation
Engineered Polymer Systems Division
Phone: 801 972 3000
www.parkerseals.com

Table 5-25. CR Gland Dimensions — Inch (Continued)

A Rod Diameter	B Groove Diameter	C Groove Width (CR0)	C Groove Width (CR1)	C Groove Width (CR2)	D Throat Diameter*	O-ring Dash Number	CR Part Number (X = Groove Width of 0, 1 or 2)
+.000/-.002	**+.002/-.000**	**+.005/-.000**	**+.005/-.000**	**+.005/-.000**	**+001/-.000**		
0.437	0.547	0.093	0.138	0.205	0.438	013	**0401CR X-013A**
0.500	0.610	0.093	0.138	0.205	0.501	014	**0401CR X-014A**
0.562	0.672	0.093	0.138	0.205	0.563	015	**0401CR X-015A**
0.625	0.735	0.093	0.138	0.205	0.626	016	**0401CR X-016A**
0.687	0.797	0.093	0.138	0.205	0.688	017	**0401CR X-017A**
0.750	0.860	0.093	0.138	0.205	0.751	018	**0401CR X-018A**
0.812	0.922	0.093	0.138	0.205	0.813	019	**0401CR X-019A**
0.875	0.985	0.093	0.138	0.205	0.876	020	**0401CR X-020A**
0.937	1.047	0.093	0.138	0.205	0.938	021	**0401CR X-021A**
1.000	1.110	0.093	0.138	0.205	1.001	022	**0401CR X-022A**
1.062	1.172	0.093	0.138	0.205	1.063	023	**0401CR X-023A**
1.125	1.235	0.093	0.138	0.205	1.126	024	**0401CR X-024A**
1.187	1.297	0.093	0.138	0.205	1.188	025	**0401CR X-025A**
1.250	1.360	0.093	0.138	0.205	1.251	026	**0401CR X-026A**
1.312	1.422	0.093	0.138	0.205	1.313	027	**0401CR X-027A**
1.375	1.485	0.093	0.138	0.205	1.376	028	**0401CR X-028A**
+.000/-.002	**+.002/-.000**	**+.005/-.000**	**+.005/-.000**	**+.005/-.000**	**+.002/-.000**		
0.125	0.301	0.140	0.171	0.238	0.126	104	**0401CR X-104A**
0.156	0.332	0.140	0.171	0.238	0.157	105	**0401CR X-105A**
0.187	0.363	0.140	0.171	0.238	0.188	106	**0401CR X-106A**
0.218	0.394	0.140	0.171	0.238	0.219	107	**0401CR X-107A**
0.250	0.426	0.140	0.171	0.238	0.251	108	**0401CR X-108A**
0.312	0.488	0.140	0.171	0.238	0.313	109	**0401CR X-109A**
0.375	0.551	0.140	0.171	0.238	0.376	110	**0401CR X-110A**
0.437	0.613	0.140	0.171	0.238	0.438	111	**0401CR X-111A**
0.500	0.676	0.140	0.171	0.238	0.501	112	**0401CR X-112A**
0.562	0.738	0.140	0.171	0.238	0.563	113	**0401CR X-113A**
0.625	0.801	0.140	0.171	0.238	0.626	114	**0401CR X-114A**
0.687	0.863	0.140	0.171	0.238	0.688	115	**0401CR X-115A**
0.750	0.926	0.140	0.171	0.238	0.751	116	**0401CR X-116A**
0.812	0.988	0.140	0.171	0.238	0.813	117	**0401CR X-117A**
0.875	1.051	0.140	0.171	0.238	0.876	118	**0401CR X-118A**
0.937	1.113	0.140	0.171	0.238	0.938	119	**0401CR X-119A**
1.000	1.176	0.140	0.171	0.238	1.001	120	**0401CR X-120A**
1.062	1.238	0.140	0.171	0.238	1.063	121	**0401CR X-121A**
1.125	1.301	0.140	0.171	0.238	1.126	122	**0401CR X-122A**
1.187	1.363	0.140	0.171	0.238	1.188	123	**0401CR X-123A**
1.250	1.426	0.140	0.171	0.238	1.251	124	**0401CR X-124A**
1.312	1.488	0.140	0.171	0.238	1.313	125	**0401CR X-125A**
1.375	1.551	0.140	0.171	0.238	1.376	126	**0401CR X-126A**
1.437	1.613	0.140	0.171	0.238	1.439	127	**0401CR X-127A**
1.500	1.676	0.140	0.171	0.238	1.502	128	**0401CR X-128A**
1.562	1.738	0.140	0.171	0.238	1.564	129	**0401CR X-129A**
1.625	1.801	0.140	0.171	0.238	1.627	130	**0401CR X-130A**
1.687	1.863	0.140	0.171	0.238	1.689	131	**0401CR X-131A**
1.750	1.926	0.140	0.171	0.238	1.752	132	**0401CR X-132A**

*If used with wear rings, refer to wear ring throat diameter, see Section 9.
For custom groove calculations, see Appendix C.

Parker Hannifin Corporation
Engineered Polymer Systems Division
Phone: 801 972 3000

Table 5-25. CR Gland Dimensions — Inch (Continued)

A Rod Diameter	B Groove Diameter	C Groove Width (CR0)	C Groove Width (CR1)	C Groove Width (CR2)	D Throat Diameter*	O-ring Dash Number	CR Part Number (X = Groove Width of 0, 1 or 2)
+.000/-.002	+.002/-.000	+.005/-.000	+.005/-.000	+.005/-.000	+.003/-.000		
1.812	1.988	0.140	0.171	0.238	1.814	133	**0401CR X-133A**
1.875	2.051	0.140	0.171	0.238	1.877	134	**0401CR X-134A**
1.937	2.113	0.140	0.171	0.238	1.939	135	**0401CR X-135A**
2.000	2.176	0.140	0.171	0.238	2.002	136	**0401CR X-136A**
2.062	2.238	0.140	0.171	0.238	2.064	137	**0401CR X-137A**
2.125	2.301	0.140	0.171	0.238	2.127	138	**0401CR X-138A**
2.187	2.363	0.140	0.171	0.238	2.189	139	**0401CR X-139A**
2.250	2.426	0.140	0.171	0.238	2.252	140	**0401CR X-140A**
2.312	2.488	0.140	0.171	0.238	2.314	141	**0401CR X-141A**
2.375	2.551	0.140	0.171	0.238	2.377	142	**0401CR X-142A**
2.437	2.613	0.140	0.171	0.238	2.439	143	**0401CR X-143A**
2.500	2.676	0.140	0.171	0.238	2.502	144	**0401CR X-144A**
2.562	2.738	0.140	0.171	0.238	2.564	145	**0401CR X-145A**
2.625	2.801	0.140	0.171	0.238	2.627	146	**0401CR X-146A**
2.687	2.863	0.140	0.171	0.238	2.689	147	**0401CR X-147A**
2.750	2.926	0.140	0.171	0.238	2.752	148	**0401CR X-148A**
2.812	2.988	0.140	0.171	0.238	2.814	149	**0401CR X-149A**
2.875	3.051	0.140	0.171	0.238	2.877	150	**0401CR X-150A**
3.000	3.176	0.140	0.171	0.238	3.002	151	**0401CR X-151A**
+.000/-.002	+.002/-.000	+.005/-.000	+.005/-.000	+.005/-.000	+.002/-.000		
0.187	0.429	0.187	0.208	0.275	0.188	201	**0401CR X-201A**
0.250	0.492	0.187	0.208	0.275	0.251	202	**0401CR X-202A**
0.312	0.554	0.187	0.208	0.275	0.313	203	**0401CR X-203A**
0.375	0.617	0.187	0.208	0.275	0.376	204	**0401CR X-204A**
0.437	0.679	0.187	0.208	0.275	0.438	205	**0401CR X-205A**
0.500	0.742	0.187	0.208	0.275	0.501	206	**0401CR X-206A**
0.562	0.804	0.187	0.208	0.275	0.563	207	**0401CR X-207A**
0.625	0.867	0.187	0.208	0.275	0.626	208	**0401CR X-208A**
0.687	0.929	0.187	0.208	0.275	0.688	209	**0401CR X-209A**
0.750	0.992	0.187	0.208	0.275	0.751	210	**0401CR X-210A**
0.812	1.054	0.187	0.208	0.275	0.813	211	**0401CR X-211A**
0.875	1.117	0.187	0.208	0.275	0.876	212	**0401CR X-212A**
0.937	1.179	0.187	0.208	0.275	0.938	213	**0401CR X-213A**
1.000	1.242	0.187	0.208	0.275	1.001	214	**0401CR X-214A**
1.062	1.304	0.187	0.208	0.275	1.063	215	**0401CR X-215A**
1.125	1.367	0.187	0.208	0.275	1.126	216	**0401CR X-216A**
1.187	1.429	0.187	0.208	0.275	1.188	217	**0401CR X-217A**
1.250	1.492	0.187	0.208	0.275	1.251	218	**0401CR X-218A**
1.312	1.554	0.187	0.208	0.275	1.313	219	**0401CR X-219A**
1.375	1.617	0.187	0.208	0.275	1.376	220	**0401CR X-220A**
1.437	1.679	0.187	0.208	0.275	1.438	221	**0401CR X-221A**
1.500	1.742	0.187	0.208	0.275	1.501	222	**0401CR X-222A**
1.625	1.867	0.187	0.208	0.275	1.627	223	**0401CR X-223A**
1.750	1.992	0.187	0.208	0.275	1.752	224	**0401CR X-224A**
1.875	2.117	0.187	0.208	0.275	1.877	225	**0401CR X-225A**
2.000	2.242	0.187	0.208	0.275	2.002	226	**0401CR X-226A**
2.125	2.367	0.187	0.208	0.275	2.127	227	**0401CR X-227A**

*If used with wear rings, refer to wear ring throat diameter, see Section 9.
For custom groove calculations, see Appendix C.

Parker Hannifin Corporation
Engineered Polymer Systems Division
Phone: 801 972 3000

Table 5-25. CR Gland Dimensions — Inch (Continued)

A Rod Diameter	B Groove Diameter	C Groove Width (CR0)	C Groove Width (CR1)	C Groove Width (CR2)	D Throat Diameter*	O-ring Dash Number	CR Part Number (X = Groove Width of 0, 1 or 2)
+.000/-.002	+.002/-.000	+.005/-.000	+.005/-.000	+.005/-.000	+.002/-.000		
2.250	2.492	0.187	0.208	0.275	2.252	228	**0401CR X-228A**
2.375	2.617	0.187	0.208	0.275	2.377	229	**0401CR X-229A**
2.500	2.742	0.187	0.208	0.275	2.502	230	**0401CR X-230A**
2.625	2.867	0.187	0.208	0.275	2.627	231	**0401CR X-231A**
2.750	2.992	0.187	0.208	0.275	2.752	232	**0401CR X-232A**
2.875	3.117	0.187	0.208	0.275	2.877	233	**0401CR X-233A**
3.000	3.242	0.187	0.208	0.275	3.002	234	**0401CR X-234A**
3.125	3.367	0.187	0.208	0.275	3.127	235	**0401CR X-235A**
3.250	3.492	0.187	0.208	0.275	3.252	236	**0401CR X-236A**
3.375	3.617	0.187	0.208	0.275	3.377	237	**0401CR X-237A**
3.500	3.742	0.187	0.208	0.275	3.502	238	**0401CR X-238A**
3.625	3.867	0.187	0.208	0.275	3.627	239	**0401CR X-239A**
3.750	3.992	0.187	0.208	0.275	3.752	240	**0401CR X-240A**
3.875	4.117	0.187	0.208	0.275	3.877	241	**0401CR X-241A**
4.000	4.242	0.187	0.208	0.275	4.002	242	**0401CR X-242A**
4.125	4.367	0.187	0.208	0.275	4.127	243	**0401CR X-243A**
4.250	4.492	0.187	0.208	0.275	4.252	244	**0401CR X-244A**
4.375	4.617	0.187	0.208	0.275	4.377	245	**0401CR X-245A**
4.500	4.742	0.187	0.208	0.275	4.503	246	**0401CR X-246A**
4.625	4.867	0.187	0.208	0.275	4.628	247	**0401CR X-247A**
4.750	4.992	0.187	0.208	0.275	4.753	248	**0401CR X-248A**
4.875	5.117	0.187	0.208	0.275	4.878	249	**0401CR X-249A**
5.000	5.242	0.187	0.208	0.275	5.003	250	**0401CR X-250A**
+.000/-.002	+.002/-.000	+.005/-.000	+.005/-.000	+.005/-.000	+.002/-.000		
0.437	0.807	0.281	0.311	0.410	0.439	309	**0401CR X-309A**
0.500	0.870	0.281	0.311	0.410	0.502	310	**0401CR X-310A**
0.562	0.932	0.281	0.311	0.410	0.564	311	**0401CR X-311A**
0.625	0.995	0.281	0.311	0.410	0.627	312	**0401CR X-312A**
0.687	1.057	0.281	0.311	0.410	0.689	313	**0401CR X-313A**
0.750	1.120	0.281	0.311	0.410	0.752	314	**0401CR X-314A**
0.812	1.182	0.281	0.311	0.410	0.814	315	**0401CR X-315A**
0.875	1.245	0.281	0.311	0.410	0.877	316	**0401CR X-316A**
0.937	1.307	0.281	0.311	0.410	0.939	317	**0401CR X-317A**
1.000	1.370	0.281	0.311	0.410	1.002	318	**0401CR X-318A**
1.062	1.432	0.281	0.311	0.410	1.064	319	**0401CR X-319A**
1.125	1.495	0.281	0.311	0.410	1.127	320	**0401CR X-320A**
1.187	1.557	0.281	0.311	0.410	1.189	321	**0401CR X-321A**
1.250	1.620	0.281	0.311	0.410	1.252	322	**0401CR X-322A**
1.312	1.682	0.281	0.311	0.410	1.314	323	**0401CR X-323A**
1.375	1.745	0.281	0.311	0.410	1.377	324	**0401CR X-324A**
1.500	1.870	0.281	0.311	0.410	1.502	325	**0401CR X-325A**
1.625	1.995	0.281	0.311	0.410	1.627	326	**0401CR X-326A**
1.750	2.120	0.281	0.311	0.410	1.752	327	**0401CR X-327A**
+.000/-.002	+.002/-.000	+.005/-.000	+.005/-.000	+.005/-.000	+.002/-.000		
1.875	2.245	0.281	0.311	0.410	1.878	328	**0401CR X-328A**
2.000	2.370	0.281	0.311	0.410	2.003	329	**0401CR X-329A**
2.125	2.495	0.281	0.311	0.410	2.128	330	**0401CR X-330A**
2.250	2.620	0.281	0.311	0.410	2.253	331	**0401CR X-331A**

*If used with wear rings, refer to wear ring throat diameter, see Section 9.
For custom groove calculations, see Appendix C.

09/01/07

Parker Hannifin Corporation
Engineered Polymer Systems Division
Phone: 801 972 3000

Table 5-25. CR Gland Dimensions — Inch (Continued)

A Rod Diameter	B Groove Diameter	C Groove Width (CR0)	C Groove Width (CR1)	C Groove Width (CR2)	D Throat Diameter*	O-ring Dash Number	CR Part Number (X = Groove Width of 0, 1 or 2)
+.000/-.002	+.002/-.000	+.005/-.000	+.005/-.000	+.005/-.000	+.002/-.000		
2.375	2.745	0.281	0.311	0.410	2.378	332	**0401CR X-332A**
2.500	2.870	0.281	0.311	0.410	2.503	333	**0401CR X-333A**
2.625	2.995	0.281	0.311	0.410	2.628	334	**0401CR X-334A**
2.750	3.120	0.281	0.311	0.410	2.753	335	**0401CR X-335A**
2.875	3.245	0.281	0.311	0.410	2.878	336	**0401CR X-336A**
3.000	3.370	0.281	0.311	0.410	3.003	337	**0401CR X-337A**
3.125	3.495	0.281	0.311	0.410	3.128	338	**0401CR X-338A**
3.250	3.620	0.281	0.311	0.410	3.253	339	**0401CR X-339A**
3.375	3.745	0.281	0.311	0.410	3.378	340	**0401CR X-340A**
3.500	3.870	0.281	0.311	0.410	3.503	341	**0401CR X-341A**
3.625	3.995	0.281	0.311	0.410	3.628	342	**0401CR X-342A**
3.750	4.120	0.281	0.311	0.410	3.753	343	**0401CR X-343A**
3.875	4.245	0.281	0.311	0.410	3.878	344	**0401CR X-344A**
4.000	4.370	0.281	0.311	0.410	4.003	345	**0401CR X-345A**
4.125	4.495	0.281	0.311	0.410	4.128	346	**0401CR X-346A**
4.250	4.620	0.281	0.311	0.410	4.253	347	**0401CR X-347A**
4.375	4.745	0.281	0.311	0.410	4.378	348	**0401CR X-348A**
4.500	4.870	0.281	0.311	0.410	4.503	349	**0401CR X-349A**
4.625	4.995	0.281	0.311	0.410	4.628	350	**0401CR X-350A**
4.750	5.120	0.281	0.311	0.410	4.753	351	**0401CR X-351A**
4.875	5.245	0.281	0.311	0.410	4.878	352	**0401CR X-352A**
5.000	5.370	0.281	0.311	0.410	5.003	353	**0401CR X-353A**
+.000/-.002	+.002/-.000	+.005/-.000	+.005/-.000	+.005/-.000	+.003/-.000		
4.500	4.974	0.375	0.408	0.538	4.504	425	**0401CR X-425A**
4.625	5.099	0.375	0.408	0.538	4.629	426	**0401CR X-426A**
4.750	5.224	0.375	0.408	0.538	4.754	427	**0401CR X-427A**
4.875	5.349	0.375	0.408	0.538	4.879	428	**0401CR X-428A**
5.000	5.474	0.375	0.408	0.538	5.004	429	**0401CR X-429A**
5.125	5.599	0.375	0.408	0.538	5.129	430	**0401CR X-430A**
5.250	5.724	0.375	0.408	0.538	5.254	431	**0401CR X-431A**
5.375	5.849	0.375	0.408	0.538	5.379	432	**0401CR X-432A**
5.500	5.974	0.375	0.408	0.538	5.504	433	**0401CR X-433A**
5.625	6.099	0.375	0.408	0.538	5.629	434	**0401CR X-434A**
5.750	6.224	0.375	0.408	0.538	5.754	435	**0401CR X-435A**
5.875	6.349	0.375	0.408	0.538	5.879	436	**0401CR X-436A**
6.000	6.474	0.375	0.408	0.538	6.004	437	**0401CR X-437A**
6.250	6.724	0.375	0.408	0.538	6.254	438	**0401CR X-438A**
6.500	6.974	0.375	0.408	0.538	6.504	439	**0401CR X-439A**
6.750	7.224	0.375	0.408	0.538	6.754	440	**0401CR X-440A**
7.000	7.474	0.375	0.408	0.538	7.004	441	**0401CR X-441A**
7.250	7.724	0.375	0.408	0.538	7.254	442	**0401CR X-442A**
7.500	7.974	0.375	0.408	0.538	7.504	443	**0401CR X-443A**
7.750	8.224	0.375	0.408	0.538	7.754	444	**0401CR X-444A**
8.000	8.474	0.375	0.408	0.538	8.004	445	**0401CR X-445A**
8.500	8.974	0.375	0.408	0.538	8.504	446	**0401CR X-446A**
9.000	9.474	0.375	0.408	0.538	9.004	447	**0401CR X-447A**
9.500	9.974	0.375	0.408	0.538	9.504	448	**0401CR X-448A**
10.000	10.474	0.375	0.408	0.538	10.004	449	**0401CR X-449A**

*If used with wear rings, refer to wear ring throat diameter, see Section 9.
For custom groove calculations, see Appendix C.

09/01/07

Parker Hannifin Corporation
Engineered Polymer Systems Division
Phone: 801 972 3000

Table 5-25. CR Gland Dimensions — Inch (Continued)

A Rod Diameter	B Groove Diameter	C Groove Width (CR0)	C Groove Width (CR1)	C Groove Width (CR2)	D Throat Diameter*	O-ring Dash Number	CR Part Number (X = Groove Width of 0, 1 or 2)
+.000/-.002	+.002/-.000	+.005/-.000	+.005/-.000	+.005/-.000	+.004/-.000		
10.500	10.974	0.375	0.408	0.538	10.504	450	**0401CR X-450A**
11.000	11.474	0.375	0.408	0.538	11.004	451	**0401CR X-451A**
11.500	11.974	0.375	0.408	0.538	11.504	452	**0401CR X-452A**
12.000	12.474	0.375	0.408	0.538	12.004	453	**0401CR X-453A**
12.500	12.974	0.375	0.408	0.538	12.504	454	**0401CR X-454A**
13.000	13.474	0.375	0.408	0.538	13.004	455	**0401CR X-455A**
13.500	13.974	0.375	0.408	0.538	13.504	456	**0401CR X-456A**
14.000	14.474	0.375	0.408	0.538	14.004	457	**0401CR X-457A**
14.500	14.974	0.375	0.408	0.538	14.504	458	**0401CR X-458A**
15.000	15.474	0.375	0.408	0.538	15.004	459	**0401CR X-459A**
15.500	15.974	0.375	0.408	0.538	15.504	460	**0401CR X-460A**
16.000	16.474	0.375	0.408	0.538	16.004	461	**0401CR X-461A**

*If used with wear rings, refer to wear ring throat diameter, see Section 9.
For custom groove calculations, see Appendix C.

NOTE: For sizes larger than those shown in the table, please contact your local Parker Seal representative.

Parker Hannifin Corporation
Engineered Polymer Systems Division
Phone: 801 972 3000

OC Profile, Compact PTFE Rod Cap Seal

The Parker OC profile is a bi-directional rod seal for use in pneumatic and low to medium duty hydraulic systems. The OC profile is a two piece design utilizing a rectangular PTFE cap and standard size Parker o-ring. The OC profile is an excellent choice for applications requiring a compact design. The unique properties of the modified PTFE provide added wear resistance for improved cycle life. Parker's OC profile will retrofit non-Parker seals of similar design.

The OC profile may be ordered without the energizer by omitting the energizer code. See part number nomenclature.

Technical Data

Standard Materials*		Temperature Range	Pressure Range†	Surface Speed
Cap				
0102	Modified PTFE	-320°F to 450°F (-195°C to 282°C)	1,500 psi (103 bar)	< 13 ft/s (4 m/sec)
Energizer				
A	70A Nitrile	-30°F to 250°F (-34°C to 121°C)		

***Alternate Materials:** For applications that may require an alternate material, please see Section 3 for alternate PTFE (Table 3-4) and energizer (Table 3-5) materials.

†Pressure Range without wear rings (see Table 2-4, page 2-5).

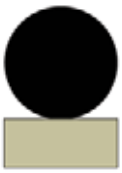

OC Cross-Section

Options

Notched side walls: Notches can be added to the side walls of the PTFE cap. This can help to optimize the seal's response to fluid pressure. Notched side walls help ensure that fluid pressure fills the cavity between the side face of the seal and the side face of the seal gland. Consult your local Parker Seal representative for the availability and cost to add side notches to the OC profile.

N= Notched walls 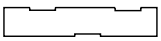

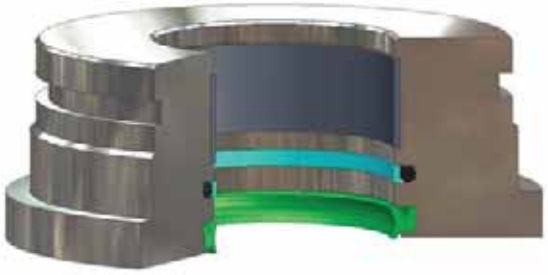

OC installed in Rod Gland

Part Number Nomenclature — OC Profile

Table 5-26. OC Profile — Inch

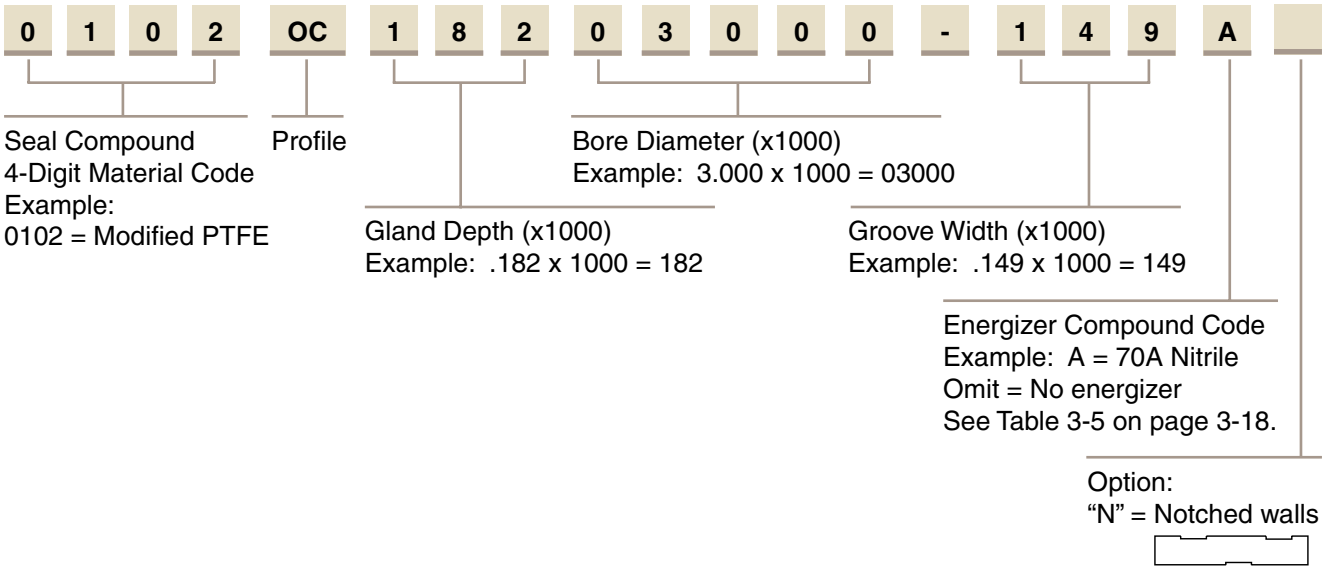

5

Gland Dimensions — OC Profile

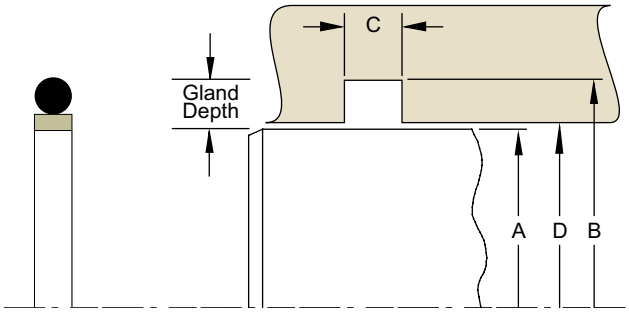

Please refer to Engineering Section 2, Page 2-8 for surface finish and additional hardware considerations.

Table 5-27. OC Profile — Inch

A Rod Diameter	B Groove Diameter	C Groove Width	D Throat Diameter*	O-ring Dash Number	Part Number
+.000/-.001	**+.001/-.000**	**+.005/-.000**	**+.002/-.000**		
0.125	0.268	0.079	0.126	007	**0102OC07200125-079A**
0.156	0.299	0.079	0.157	008	**0102OC07200156-079A**
0.187	0.331	0.079	0.188	009	**0102OC07200187-079A**
0.219	0.362	0.079	0.220	010	**0102OC07200219-079A**
0.250	0.424	0.079	0.251	011	**0102OC08700250-079A**
0.312	0.487	0.079	0.313	012	**0102OC08700312-079A**
0.375	0.547	0.079	0.376	013	**0102OC08700375-079A**
+.000/-.002	**+.002/-.000**	**+.005/-.000**	**+.002/-.000**		
0.437	0.610	0.079	0.438	014	**0102OC08700437-079A**
0.500	0.672	0.079	0.501	015	**0102OC08700500-079A**
0.562	0.735	0.079	0.563	016	**0102OC08700562-079A**
0.625	0.797	0.079	0.626	017	**0102OC08700675-079A**
0.687	0.860	0.079	0.688	018	**0102OC08700687-079A**

*If used with wear rings, refer to wear ring throat diameter, see Section 9.
For custom groove calculations, see Appendix C.

09/01/07

Parker Hannifin Corporation
Engineered Polymer Systems Division
Phone: 801 972 3000
www.parkerseals.com

Table 5-27. OC Gland Dimensions — Inch (Continued)

A Rod Diameter	B Groove Diameter	C Groove Width	D Throat Diameter*	O-ring Dash Number	Part Number
+.000/-.002	+.002/-.000	+.005/-.000	+.002/-.000		
0.750	0.922	0.079	0.751	019	**0102OC08700750-079A**
0.812	0.985	0.079	0.813	020	**0102OC08700812-079A**
0.875	1.047	0.079	0.876	021	**0102OC08700875-079A**
0.937	1.110	0.079	0.938	022	**0102OC08700937-079A**
1.000	1.172	0.079	1.001	023	**0102OC08701000-079A**
1.062	1.235	0.079	1.063	024	**0102OC08701062-079A**
1.125	1.298	0.079	1.126	025	**0102OC08701125-079A**
1.188	1.360	0.079	1.189	026	**0102OC08701188-079A**
1.250	1.422	0.079	1.251	027	**0102OC08701250-079A**
1.312	1.485	0.079	1.313	028	**0102OC08701312-079A**
+.000/-.003	+.003/-.000	+.005/-.000	+.002/-.000		
0.375	0.611	0.112	0.376	111	**0102OC11800375-112A**
0.437	0.674	0.112	0.438	112	**0102OC11800437-112A**
0.500	0.736	0.112	0.501	113	**0102OC11800500-112A**
0.562	0.799	0.112	0.563	114	**0102OC11800562-112A**
0.625	0.862	0.112	0.626	115	**0102OC11800625-112A**
0.687	0.924	0.112	0.688	116	**0102OC11800687-112A**
0.750	0.986	0.112	0.751	117	**0102OC11800750-112A**
0.812	1.049	0.112	0.813	118	**0102OC11800812-112A**
0.875	1.111	0.112	0.876	119	**0102OC11800875-112A**
0.937	1.174	0.112	0.938	120	**0102OC11800937-112A**
1.000	1.236	0.112	1.001	121	**0102OC11801000-112A**
1.062	1.299	0.112	1.063	122	**0102OC11801062-112A**
1.125	1.362	0.112	1.126	123	**0102OC11801125-112A**
1.187	1.424	0.112	1.188	124	**0102OC11801187-112A**
1.250	1.486	0.112	1.251	125	**0102OC11801250-112A**
1.312	1.549	0.112	1.313	126	**0102OC11801312-112A**
1.375	1.611	0.112	1.376	127	**0102OC11801375-112A**
1.437	1.674	0.112	1.438	128	**0102OC11801437-112A**
1.500	1.736	0.112	1.501	129	**0102OC11801500-112A**
1.562	1.799	0.112	1.563	130	**0102OC11801562-112A**
1.625	1.862	0.112	1.626	131	**0102OC11801625-112A**
1.687	1.924	0.112	1.688	132	**0102OC11801687-112A**
1.750	1.986	0.112	1.751	133	**0102OC11801750-112A**
1.812	2.049	0.112	1.813	134	**0102OC11801812-112A**
1.875	2.111	0.112	1.876	135	**0102OC11801875-112A**
1.937	2.174	0.112	1.938	136	**0102OC11801937-112A**
2.000	2.236	0.112	2.001	137	**0102OC11802000-112A**
2.062	2.299	0.112	2.063	138	**0102OC11802062-112A**
2.125	2.632	0.112	2.126	139	**0102OC11802125-112A**
2.187	2.424	0.112	2.188	140	**0102OC11802187-112A**
2.250	2.486	0.112	2.251	141	**0102OC11802250-112A**
2.312	2.549	0.112	2.313	142	**0102OC11802312-112A**
2.375	2.611	0.112	2.376	143	**0102OC11802375-112A**
2.437	2.674	0.112	2.438	144	**0102OC11802437-112A**
2.500	2.736	0.112	2.501	145	**0102OC11802500-112A**
2.562	2.799	0.112	2.563	146	**0102OC11802562-112A**

*If used with wear rings, refer to wear ring throat diameter, see Section 9.
For custom groove calculations, see Appendix C.

Parker Hannifin Corporation
Engineered Polymer Systems Division
Phone: 801 972 3000

Table 5-27. OC Gland Dimensions — Inch (Continued)

A Rod Diameter	B Groove Diameter	C Groove Width	D Throat Diameter*	O-ring Dash Number	Part Number
+.000/-.003	**+.003/-.000**	**+.005/-.000**	**+.002/-.000**		
2.625	2.862	0.112	2.626	147	**0102OC11802625-112A**
2.687	2.924	0.112	2.688	148	**0102OC11802687-112A**
2.750	2.986	0.112	2.751	149	**0102OC11802750-112A**
+.000/-.004	**+.004/-.000**	**+.005/-.000**	**+.002/-.000**		
0.750	1.050	0.149	0.751	211	**0102OC15000750-149A**
0.812	1.113	0.149	0.813	212	**0102OC15000812-149A**
0.875	1.175	0.149	0.876	213	**0102OC15000875-149A**
0.937	1.238	0.149	0.938	214	**0102OC15000937-149A**
1.000	1.300	0.149	1.001	215	**0102OC15001000-149A**
1.062	1.363	0.149	1.063	216	**0102OC15001062-149A**
1.125	1.426	0.149	1.126	217	**0102OC15001125-149A**
1.187	1.488	0.149	1.188	218	**0102OC15001187-149A**
1.250	1.550	0.149	1.251	219	**0102OC15001250-149A**
1.312	1.613	0.149	1.313	220	**0102OC15001312-149A**
1.375	1.675	0.149	1.376	221	**0102OC15001375-149A**
1.437	1.738	0.149	1.438	222	**0102OC15001437-149A**
1.500	1.863	0.149	1.501	223	**0102OC18201500-149A**
1.625	1.988	0.149	1.626	224	**0102OC18201625-149A**
1.750	2.113	0.149	1.751	225	**0102OC18201750-149A**
1.875	2.238	0.149	1.876	226	**0102OC18201875-149A**
2.000	2.363	0.149	2.001	227	**0102OC18202000-149A**
2.125	2.488	0.149	2.126	228	**0102OC18202125-149A**
2.250	2.613	0.149	2.251	229	**0102OC18202250-149A**
2.375	2.738	0.149	2.376	230	**0102OC18202375-149A**
2.500	2.863	0.149	2.501	231	**0102OC18202500-149A**
2.625	2.988	0.149	2.626	232	**0102OC18202625-149A**
2.750	3.113	0.149	2.751	233	**0102OC18202750-149A**
2.875	3.238	0.149	2.876	234	**0102OC18202875-149A**
3.000	3.363	0.149	3.001	235	**0102OC18203000-149A**
3.125	3.488	0.149	3.126	236	**0102OC18203125-149A**
3.250	3.613	0.149	3.251	237	**0102OC18203250-149A**
3.375	3.738	0.149	3.376	238	**0102OC18203375-149A**
3.500	3.863	0.149	3.501	239	**0102OC18203500-149A**
3.625	3.988	0.149	3.626	240	**0102OC18203625-149A**
3.750	4.113	0.149	3.751	241	**0102OC18203750-149A**
3.875	4.238	0.149	3.876	242	**0102OC18203875-149A**
4.000	4.363	0.149	4.001	243	**0102OC18204000-149A**
4.125	4.488	0.149	4.126	244	**0102OC18204125-149A**
4.250	4.613	0.149	4.251	245	**0102OC18204250-149A**
4.375	4.738	0.149	4.376	246	**0102OC18204375-149A**
4.500	4.863	0.149	4.501	247	**0102OC18204500-149A**
4.625	4.988	0.149	4.626	248	**0102OC18204625-149A**
+.000/-.005	**+.005/-.000**	**+.005/-.000**	**+.003/-.000**		
1.500	1.991	0.221	1.501	326	**0102OC24601500-221A**
1.625	2.116	0.221	1.626	327	**0102OC24601625-221A**
1.750	2.241	0.221	1.751	328	**0102OC24601750-221A**
1.875	2.366	0.221	1.876	329	**0102OC24601875-221A**
2.000	2.491	0.221	2.001	330	**0102OC24602000-221A**

*If used with wear rings, refer to wear ring throat diameter, see Section 9.
For custom groove calculations, see Appendix C.

Parker Hannifin Corporation
Engineered Polymer Systems Division
Phone: 801 972 3000

Table 5-27. OC Gland Dimensions — Inch (Continued)

A Rod Diameter	B Groove Diameter	C Groove Width	D Throat Diameter*	O-ring Dash Number	Part Number
+.000/-.005	+.005/-.000	+.005/-.000	+.003/-.000		
2.125	2.616	0.221	2.126	331	**0102OC24602125-221A**
2.250	2.741	0.221	2.251	332	**0102OC24602250-221A**
2.375	2.866	0.221	2.376	333	**0102OC24602375-221A**
2.500	2.991	0.221	2.501	334	**0102OC24602500-221A**
2.625	3.116	0.221	2.626	335	**0102OC24602625-221A**
2.750	3.241	0.221	2.751	336	**0102OC24602750-221A**
2.875	3.366	0.221	2.876	337	**0102OC24602875-221A**
3.000	3.491	0.221	3.001	338	**0102OC24603000-221A**
3.125	3.616	0.221	3.126	339	**0102OC24603125-221A**
3.250	3.741	0.221	3.251	340	**0102OC24603250-221A**
3.375	3.866	0.221	3.376	341	**0102OC24603375-221A**
3.500	3.991	0.221	3.501	342	**0102OC24603500-221A**
3.625	4.116	0.221	3.626	343	**0102OC24603625-221A**
3.750	4.241	0.221	3.751	344	**0102OC24603750-221A**
3.875	4.366	0.221	3.876	345	**0102OC24603875-221A**
4.000	4.491	0.221	4.001	346	**0102OC24604000-221A**
4.125	4.616	0.221	4.126	347	**0102OC24604125-221A**
4.250	4.741	0.221	4.251	348	**0102OC24604250-221A**
4.375	4.866	0.221	4.376	349	**0102OC24604375-221A**
+.000/-.006	+.006/-.000	+.005/-.000	+.004/-.000		
4.500	5.093	0.297	4.502	426	**0102OC29704500-297A**
4.625	5.218	0.297	4.627	427	**0102OC29704625-297A**
4.750	5.343	0.297	4.752	428	**0102OC29704750-297A**
4.875	5.468	0.297	4.877	429	**0102OC29704875-297A**
5.000	5.593	0.297	5.002	430	**0102OC29705000-297A**
5.125	5.718	0.297	5.127	431	**0102OC29705125-297A**
5.250	5.843	0.297	5.252	432	**0102OC29705250-297A**
5.375	5.968	0.297	5.377	433	**0102OC29705375-297A**
5.500	6.093	0.297	5.502	434	**0102OC29705500-297A**
5.625	6.218	0.297	5.627	435	**0102OC29705625-297A**
5.750	6.343	0.297	5.752	436	**0102OC29705750-297A**
5.875	6.468	0.297	5.877	437	**0102OC29705875-297A**
6.000	6.718	0.297	6.002	438	**0102OC35906000-297A**
6.250	6.968	0.297	6.252	439	**0102OC35906250-297A**
6.500	7.218	0.297	6.502	440	**0102OC35906500-297A**
6.750	7.468	0.297	6.752	441	**0102OC35906750-297A**
7.000	7.718	0.297	7.002	442	**0102OC35907000-297A**
7.250	7.968	0.297	7.252	443	**0102OC35907250-297A**
7.500	8.218	0.297	7.502	444	**0102OC35907500-297A**
7.750	8.468	0.297	7.752	445	**0102OC35907750-297A**
+.000/-.006	+.006/-.000	+.005/-.000	+.005/-.000		
8.000	8.968	0.297	8.002	446	**0102OC48408000-297A**
8.500	9.468	0.297	8.502	447	**0102OC48408500-297A**
9.000	9.968	0.297	9.002	448	**0102OC48409000-297A**
9.500	10.468	0.297	9.502	449	**0102OC48409500-297A**
10.000	10.968	0.297	10.002	450	**0102OC48410000-297A**
10.500	11.468	0.297	10.502	451	**0102OC48410500-297A**
11.000	11.968	0.297	11.002	452	**0102OC48411000-297A**

*If used with wear rings, refer to wear ring throat diameter, see Section 9.
For custom groove calculations, see Appendix C.

Parker Hannifin Corporation
Engineered Polymer Systems Division
Phone: 801 972 3000

Table 5-27. OC Gland Dimensions — Inch (Continued)

A Rod Diameter	B Groove Diameter	C Groove Width	D Throat Diameter*	O-ring Dash Number	Part Number
+.000/-.006	+.006/-.000	+.005/-.000	+.005/-.000		
11.500	12.468	0.297	11.502	453	**0102OC48411500-297A**
12.000	12.968	0.297	12.002	454	**0102OC48412000-297A**
12.500	13.468	0.297	12.502	455	**0102OC48412500-297A**
13.000	13.968	0.297	13.002	456	**0102OC48413000-297A**
13.500	14.468	0.297	13.502	457	**0102OC48413500-297A**
14.000	14.968	0.297	14.002	458	**0102OC48414000-297A**
14.500	15.468	0.297	14.502	459	**0102OC48414500-297A**
15.000	15.968	0.297	15.002	460	**0102OC48415000-297A**

*If used with wear rings, refer to wear ring throat diameter, see Section 9.
For custom groove calculations, see Appendix C.

NOTE: For sizes larger than those shown in the table, please contact your local Parker Seal representative.

Parker Hannifin Corporation
Engineered Polymer Systems Division
Phone: 801 972 3000

BR Profile, Premium Buffer Seal

The BR profile is a compact rod seal designed to act as a buffer seal for the primary rod seal. As a buffer seal, the BR profile provides the majority of the rod sealing performance while allowing fluid to by pass onto and energize the primary rod seal. Fluid located between the BR profile and the rod seal will relieve back into the cylinder by flowing past the BR profile's flexible static side lip and slotted pedestals. This relieving or check valve function allows the BR profile and primary rod seal to work as a sealing system without the danger of developing a pressure trap. As a sealing system, the BR profile and primary rod seal provide optimal performance in the most difficult applications.

Technical Data

Standard Materials*	Temperature Range	Pressure Range†	Surface Speed
P4300A90	-65°F to 275°F (-54°C to 135°C)	5000 psi (344 bar)	< 1.6 ft/s (0.5 m/s)

***Alternate Materials:** For applications that may require an alternate material, please contact your local Parker Seal representative.

†**Pressure Range** without wear rings (see Table 2-4, page 2-5).

BR Cross-Section

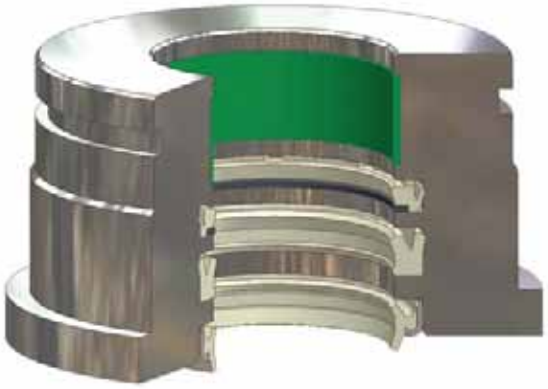

BR Installed in Rod Gland

Parker Hannifin Corporation
Engineered Polymer Systems Division
Phone: 801 972 3000

Part Number Nomenclature — BR Profile

Table 5-28. BR Profile — Inch

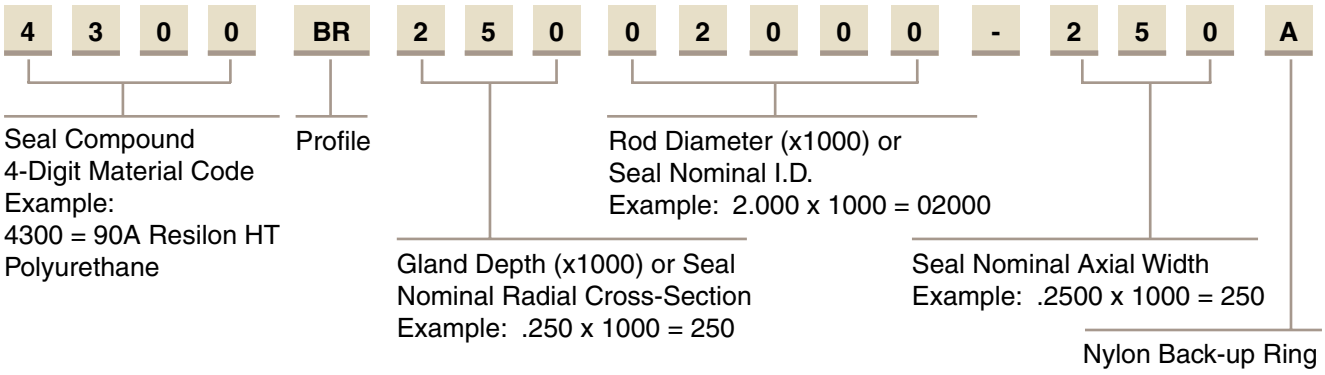

Gland Dimensions — BR Profile

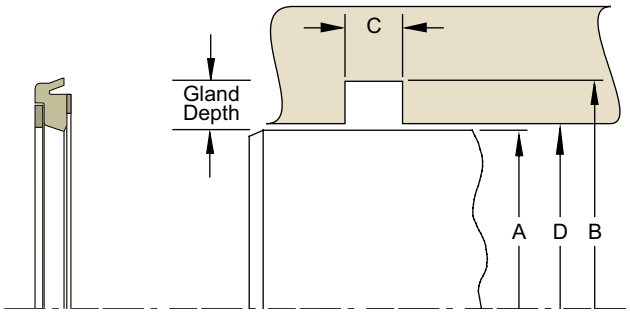

Table 5-29. Gland Dimension Tolerances

Nominal Gland Depth	A Rod Diameter	B Groove Diameter	C Groove Width	D Throat Diameter
1/8	+.000/-.001	+.002/-.000	+.015/-.000	+.002/-.000
3/16	+.000/-.002	+.002/-.000		+.002/-.000
1/4	+.000/-.002	+.003/-.000		+.003/-.000
5/16	+.000/-.002	+.004/-.000		+.003/-.000
3/8	+.000/-.002	+.005/-.000		+.004/-.000
7/16	+.000/-.003	+.006/-.000		+.004/-.000
1/2	+.000/-.003	+.007/-.000		+.005/-.000
5/8	+.000/-.003	+.009/-.000		+.006/-.000
3/4	+.000/-.004	+.011/-.000		+.007/-.000
1	+.000/-.005	+.015/-.000		+.009/-.000

Please refer to Engineering Section 2, Page 2-8 for surface finish and additional hardware considerations.

Table 5-30. BR Gland Dimensions — Inch

A Rod Diameter	B Groove Diameter	C Groove Width	D Throat Diameter*	Part Number	
1.000	1.374	0.205	1.001	**4300**	**BR18701000-187A**
1.125	1.499	0.205	1.126	**4300**	**BR18701125-187A**
1.250	1.624	0.205	1.251	**4300**	**BR18701250-187A**
1.250	1.812	0.205	1.251	**4300**	**BR28101250-135**
1.375	1.749	0.205	1.376	**4300**	**BR18701375-187A**
1.375	1.937	0.205	1.376	**4300**	**BR28101375-135**

*If used with wear rings, refer to wear ring throat diameter, see Section 9.
For custom groove calculations, see Appendix C.

09/01/07

Parker Hannifin Corporation
Engineered Polymer Systems Division
Phone: 801 972 3000
www.parkerseals.com

Table 5-30. BR Gland Dimensions — Inch (Continued)

A Rod Diameter	B Groove Diameter	C Groove Width	D Throat Diameter*	Part Number	
1.500	2.000	0.275	1.501	**4300**	**BR25001500-250A**
1.500	2.062	0.205	1.501	**4300**	**BR28101500-135**
1.750	2.250	0.275	1.751	**4300**	**BR25001750-250A**
1.750	2.312	0.205	1.751	**4300**	**BR28101750-135**
2.000	2.500	0.275	2.001	**4300**	**BR25002000-250A**
2.000	2.562	0.205	2.001	**4300**	**BR28102000-135**
2.500	3.000	0.275	2.501	**4300**	**BR25002500-250A**
2.500	3.174	0.275	2.502	**4300**	**BR33702500-229A**
2.750	3.397	0.252	2.752	**4300**	**BR32402750-229A**
3.000	3.500	0.275	3.001	**4300**	**BR25003000-250A**
3.500	4.000	0.275	3.501	**4300**	**BR25003500-250A**
3.500	4.166	0.252	3.502	**4300**	**BR33303500-229A**
3.750	4.250	0.275	3.751	**4300**	**BR25003750-250A**
4.000	4.624	0.343	4.002	**4300**	**BR31204000-312A**
4.000	4.666	0.252	4.002	**4300**	**BR33304000-229A**
4.250	4.750	0.275	4.251	**4300**	**BR25004250-250A**
4.250	4.866	0.275	4.252	**4300**	**BR30804250-250A**
4.500	5.124	0.343	4.502	**4300**	**BR31204500-312A**
4.750	5.500	0.412	4.752	**4300**	**BR37504750-375A**
5.000	5.750	0.412	5.002	**4300**	**BR37505000-375A**
5.000	5.830	0.358	5.002	**4300**	**BR41505000-325A**
5.500	6.250	0.412	5.502	**4300**	**BR37505500-375A**
5.750	6.250	0.275	5.751	**4300**	**BR25005750-250A**
9.000	10.000	0.550	9.002	**4300**	**BR50009000-500A**

*If used with wear rings, refer to wear ring throat diameter, see Section 9.
For custom groove calculations, see Appendix C.

NOTE: For sizes larger than those shown in the table, please contact your local Parker Seal representative.

Parker Hannifin Corporation
Engineered Polymer Systems Division
Phone: 801 972 3000

OD Profile, PTFE Buffer Seal

The Parker OD profile is a rod seal that can be used as a buffer seal in conjunction with a primary rod seal or in tandem with itself to form a sealing system for higher performance. The OD profile is a uni-directional seal, with a unique design that allows trapped fluid pressure back into the cylinder. When the rod extends from the cylinder the OD profile is riding on a sealing point, creating a high compression point to limit leakage. As the rod goes through its return stroke this seal rocks forward, creating a larger sealing surface on the rod. The compression force is spread out over a larger area allowing trapped fluid to pass under the seal and return to the system. This pressure relief feature allows the OD profile to be used in tandem or multiple seal arrangements. The OD features low friction, long life, and versatility.

The OD profile may be ordered without the energizer by omitting the energizer code. See part number nomenclature.

Technical Data

Standard Materials*		Temperature Range	Pressure Range†	Surface Speed
Cap				
0401	40% bronze-filled PTFE	-200°F to 575°F (-129°C to 302°C)	5000 psi (344 bar)	< 13 ft/s (4 m/sec)
Energizer				
A	70A Nitrile	-30°F to 250°F (-34°C to 121°C)		

OD Cross-Section

***Alternate Materials:** For applications that may require an alternate material, please see Section 3 for alternate PTFE (Table 3-4) and energizer (Table 3-5) materials.

†**Pressure Range** without wear rings (see Table 2-4, page 2-5).

Options
Metric: To configure metric part numbering, see Table 5-34 on page 5-52.

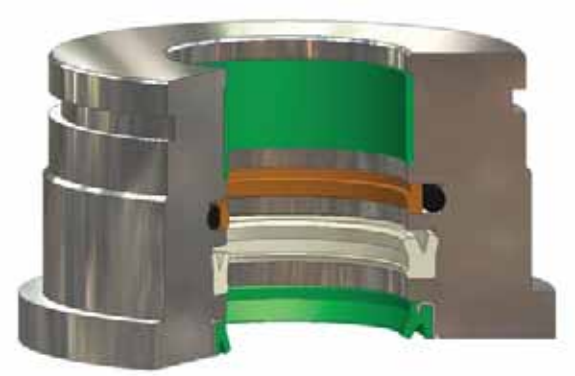

OD installed in Rod Gland

Parker Hannifin Corporation
Engineered Polymer Systems Division
Phone: 801 972 3000

Part Number Nomenclature — OD Profile

Table 5-31. OD Profile — Inch

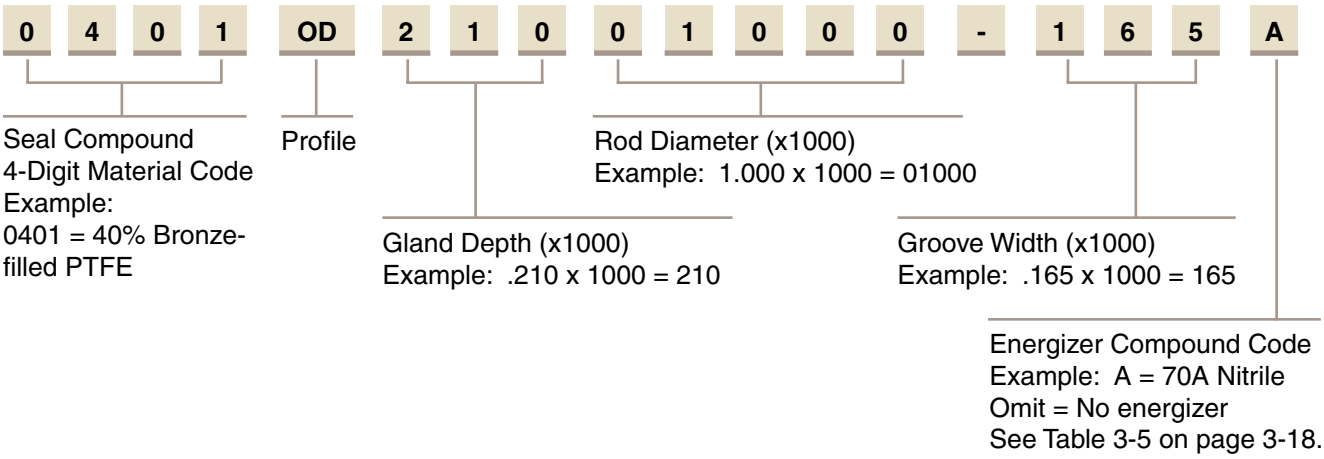

Gland Dimensions — OD Profile

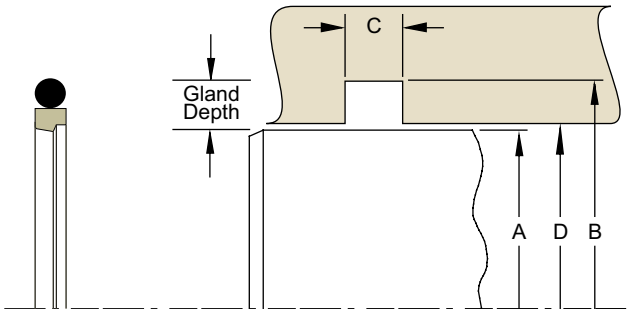

Please refer to Engineering Section 2, Page 2-8 for surface finish and additional hardware considerations.

Table 5-32. OD Profile — Inch

A Rod Diameter	B Groove Diameter	C Groove Width	D Throat Diameter*	O-ring Dash Number	Part Number
+.000 / -.001	**+.001/-.000**	**+.008/-.000**	**+.002/-.000**		
0.313	0.599	0.126	0.314	111	**0401OD14300313-126A**
0.375	0.661	0.126	0.376	112	**0401OD14300375-126A**
+.000 / -.002	**+.002/-.000**	**+.008/-.000**	**+.002/-.000**		
0.438	0.724	0.126	0.439	113	**0401OD14300438-126A**
0.500	0.786	0.126	0.501	114	**0401OD14300500-126A**
0.563	0.849	0.126	0.564	115	**0401OD14300563-126A**
0.625	0.911	0.126	0.626	116	**0401OD14300625-126A**
0.688	0.974	0.126	0.689	117	**0401OD14300688-126A**
+.000 / -.002	**+.002/-.000**	**+.008/-.000**	**+.002/-.000**		
0.750	1.170	0.165	0.751	213	**0401OD21000750-165A**
0.813	1.233	0.165	0.814	214	**0401OD21000813-165A**
0.875	1.295	0.165	0.876	215	**0401OD21000875-165A**
0.938	1.358	0.165	0.939	216	**0401OD21000938-165A**
1.000	1.420	0.165	1.001	217	**0401OD21001000-165A**
1.063	1.483	0.165	1.064	218	**0401OD21001063-165A**
1.125	1.545	0.165	1.126	219	**0401OD21001125-165A**
1.188	1.608	0.165	1.189	220	**0401OD21001188-165A**
1.250	1.670	0.165	1.251	221	**0401OD21001250-165A**
1.313	1.733	0.165	1.314	222	**0401OD21001313-165A**

*If used with wear rings, refer to wear ring throat diameter, see Section 9.
For custom groove calculations, see Appendix C.

09/01/07

Parker Hannifin Corporation
Engineered Polymer Systems Division
Phone: 801 972 3000
www.parkerseals.com

Table 5-32. OD Gland Dimensions — Inch (Continued)

A Rod Diameter	B Groove Diameter	C Groove Width	D Throat Diameter*	O-ring Dash Number	Part Number
+.000 / -.002	**+.002/-.000**	**+.008/-.000**	**+.002/-.000**		
1.375	1.795	0.165	1.376	222	**0401OD21001375-165A**
1.438	1.858	0.165	1.439	223	**0401OD21001438-165A**
+.000 / -.002	**+.002/-.000**	**+.008/-.000**	**+.003/-.000**		
1.500	2.094	0.248	1.501	327	**0401OD29701500-248A**
1.563	2.157	0.248	1.564	327	**0401OD29701563-248A**
1.625	2.219	0.248	1.626	328	**0401OD29701625-248A**
1.688	2.282	0.248	1.689	328	**0401OD29701688-248A**
1.750	2.344	0.248	1.751	329	**0401OD29701750-248A**
1.813	2.407	0.248	1.814	329	**0401OD29701813-248A**
1.875	2.469	0.248	1.876	330	**0401OD29701875-248A**
1.938	2.532	0.248	1.939	330	**0401OD29701938-248A**
+.000 / -.003	**+.003/-.000**	**+.008/-.000**	**+.003/-.000**		
2.000	2.594	0.248	2.001	331	**0401OD29702000-248A**
2.125	2.719	0.248	2.126	332	**0401OD29702125-248A**
2.250	2.844	0.248	2.251	333	**0401OD29702250-248A**
2.375	2.969	0.248	2.376	334	**0401OD29702375-248A**
2.500	3.094	0.248	2.501	335	**0401OD29702500-248A**
2.625	3.219	0.248	2.626	336	**0401OD29702625-248A**
2.750	3.344	0.248	2.751	337	**0401OD29702750-248A**
2.875	3.469	0.248	2.876	338	**0401OD29702875-248A**
3.000	3.594	0.248	3.001	339	**0401OD29703000-248A**
3.125	3.719	0.248	3.126	340	**0401OD29703125-248A**
3.250	3.844	0.248	3.251	341	**0401OD29703250-248A**
3.375	3.969	0.248	3.376	342	**0401OD29703375-248A**
3.500	4.094	0.248	3.501	343	**0401OD29703500-248A**
3.625	4.219	0.248	3.626	344	**0401OD29703625-248A**
3.750	4.344	0.248	3.751	345	**0401OD29703750-248A**
3.875	4.469	0.248	3.876	346	**0401OD29703875-248A**
4.000	4.594	0.248	4.001	347	**0401OD29704000-248A**
4.125	4.719	0.248	4.126	348	**0401OD29704125-248A**
4.250	4.844	0.248	4.251	349	**0401OD29704250-248A**
4.375	4.969	0.248	4.376	350	**0401OD29704375-248A**
4.500	5.094	0.248	4.501	351	**0401OD29704500-248A**
4.625	5.219	0.248	4.626	352	**0401OD29704625-248A**
+.000 / -.004	**+.004/-.000**	**+.008/-.000**	**+.003/-.000**		
4.750	5.344	0.248	4.752	353	**0401OD29704750-248A**
4.875	5.469	0.248	4.877	354	**0401OD29704875-248A**
5.000	5.594	0.248	5.002	355	**0401OD29705000-248A**
5.125	5.719	0.248	5.127	356	**0401OD29705125-248A**
5.250	5.844	0.248	5.252	357	**0401OD29705250-248A**
5.375	5.969	0.248	5.377	358	**0401OD29705375-248A**
5.500	6.094	0.248	5.502	359	**0401OD29705500-248A**
5.625	6.219	0.248	5.627	360	**0401OD29705625-248A**
5.750	6.344	0.248	5.752	361	**0401OD29705750-248A**
6.000	6.594	0.248	6.002	362	**0401OD29706000-248A**
6.250	6.844	0.248	6.252	363	**0401OD29706250-248A**
6.500	7.094	0.248	6.502	364	**0401OD29706500-248A**
6.750	7.344	0.248	6.752	365	**0401OD29706750-248A**
7.000	7.594	0.248	7.002	366	**0401OD29707000-248A**

*If used with wear rings, refer to wear ring throat diameter, see Section 9.
For custom groove calculations, see Appendix C.

Parker Hannifin Corporation
Engineered Polymer Systems Division
Phone: 801 972 3000

Table 5-32. OD Gland Dimensions — Inch (Continued)

A Rod Diameter	B Groove Diameter	C Groove Width	D Throat Diameter*	O-ring Dash Number	Part Number
+.000 / -.005	**+.005/-.000**	**+.008/-.000**	**+.003/-.000**		
7.250	7.844	0.248	7.252	367	**0401OD29707250-248A**
7.500	8.094	0.248	7.502	368	**0401OD29707500-248A**
7.750	8.344	0.248	7.752	369	**0401OD29707750-248A**
+.000 / -.005	**+.005/-.000**	**+.008/-.000**	**+.004/-.000**		
8.000	8.806	0.319	8.003	445	**0401OD40308000-319A**
8.250	9.056	0.319	8.253	446	**0401OD40308250-319A**
8.500	9.306	0.319	8.503	446	**0401OD40308500-319A**
8.750	9.556	0.319	8.753	447	**0401OD40308750-319A**
9.000	9.806	0.319	9.003	447	**0401OD40309000-319A**
9.250	10.056	0.319	9.253	448	**0401OD40309250-319A**
9.500	10.306	0.319	9.503	448	**0401OD40309500-319A**
9.750	10.556	0.319	9.753	449	**0401OD40309750-319A**
+.000 / -.005	**+.005/-.000**	**+.008/-.000**	**+.005/-.000**		
10.000	10.944	0.319	10.003	450	**0401OD47210000-319A**
10.500	11.444	0.319	10.503	451	**0401OD47210500-319A**
11.000	11.944	0.319	11.003	452	**0401OD47211000-319A**
11.500	12.444	0.319	11.503	453	**0401OD47211500-319A**
12.000	12.944	0.319	12.003	454	**0401OD47212000-319A**
+.000 / -.006	**+.006/-.000**	**+.008/-.000**	**+.005/-.000**		
12.500	13.444	0.319	12.503	454	**0401OD47212500-319A**
13.000	13.944	0.319	13.003	455	**0401OD47213000-319A**
13.500	14.444	0.319	13.503	456	**0401OD47213500-319A**
14.000	14.944	0.319	14.003	457	**0401OD47214000-319A**
14.500	15.444	0.319	14.503	458	**0401OD47214500-319A**
15.000	15.944	0.319	15.003	459	**0401OD47215000-319A**
15.500	16.444	0.319	15.503	460	**0401OD47215500-319A**
16.000	16.944	0.319	16.003	461	**0401OD47216000-319A**
16.500	17.444	0.319	16.503	462	**0401OD47216500-319A**
17.000	17.944	0.319	17.003	463	**0401OD47217000-319A**
17.500	18.444	0.319	17.503	464	**0401OD47217500-319A**
18.000	18.944	0.319	18.003	465	**0401OD47218000-319A**
18.500	19.444	0.319	18.503	466	**0401OD47218500-319A**
19.000	19.944	0.319	19.003	467	**0401OD47219000-319A**
19.500	20.444	0.319	19.503	468	**0401OD47219500-319A**
+.000 / -.007	**+.007/-.000**	**+.008/-.000**	**+.001/-.000**		
20.000	20.944	0.319	20.003	469	**0401OD47220000-319A**

*If used with wear rings, refer to wear ring throat diameter, see Section 9.
For custom groove calculations, see Appendix C.

NOTE: For sizes larger than those shown in the table, please contact your local Parker Seal representative.

Parker Hannifin Corporation
Engineered Polymer Systems Division
Phone: 801 972 3000

Part Number Nomenclature — OD Profile

Table 5-33. OD Profile — Metric

M	4	0	1	OD	0	7	.	5	0	5	0	-	6	.	3	A

Seal Compound
4-Digit Material Code
(First digit "4" replaced with "M" for Metric)
Example:
M401 = 40% Bronze-filled PTFE

Profile

Gland Depth (mm)
Example: 07.5 = 7.5 mm

Rod Diameter (mm)
(3 digits; use leading zeros if needed)
Example: 005 = 5 mm
050 = 50 mm
500 = 500 mm

Groove Width
Example: 6.3 = 63 mm

Energizer Compound Code
Example: A = 70A Nitrile
Omit = No energizer
See Table 3-5 on page 3-18.

Gland Dimensions — OD Profile

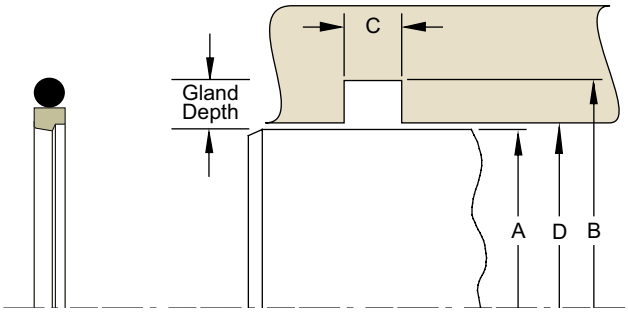

Please refer to Engineering Section 2, Page 2-8 for surface finish and additional hardware considerations.

Table 5-34. OD Profile — Metric

A Rod Diameter	B Groove Diameter	C Groove Width	D Throat Diameter*	O-ring Dash Number	Part Number
f7	H9	+.20/-.00	H8		
For ISO tolerances refer to Appendix F.					
8.0	15.2	3.2	8.0	111	**M401OD03.6008-3.2A**
10.0	17.2	3.2	10.0	112	**M401OD03.6010-3.2A**
12.0	19.2	3.2	12.0	113	**M401OD03.6012-3.2A**
14.0	21.2	3.2	14.0	114	**M401OD03.6014-3.2A**
15.0	22.2	3.2	15.0	115	**M401OD03.6015-3.2A**
16.0	23.2	3.2	16.0	116	**M401OD03.6016-3.2A**
18.0	25.2	3.2	18.0	117	**M401OD03.6018-3.2A**
20.0	30.6	4.2	20.0	213	**M401OD05.3020-4.2A**
22.0	32.6	4.2	22.0	215	**M401OD05.3022-4.2A**
25.0	35.6	4.2	25.0	217	**M401OD05.3025-4.2A**
28.0	38.6	4.2	28.0	219	**M401OD05.3028-4.2A**
30.0	40.6	4.2	30.0	220	**M401OD05.3030-4.2A**
32.0	42.6	4.2	32.0	221	**M401OD05.3032-4.2A**
35.0	45.6	4.2	35.0	222	**M401OD05.3035-4.2A**
36.0	46.6	4.2	36.0	223	**M401OD05.3036-4.2A**
40.0	55.0	6.3	40.0	327	**M401OD07.5040-6.3A**
42.0	57.0	6.3	42.0	328	**M401OD07.5042-6.3A**
45.0	60.0	6.3	45.0	329	**M401OD07.5045-6.3A**

*If used with wear rings, refer to wear ring throat diameter, see Section 9.
For custom groove calculations, see Appendix C.

09/01/07

Parker Hannifin Corporation
Engineered Polymer Systems Division
Phone: 801 972 3000

Table 5-34. OD Gland Dimensions — Metric (continued)

A Rod Diameter	B Groove Diameter	C Groove Width	D Throat Diameter*	O-ring Dash Number	Part Number
f7	H9	+.20/-.00	H8		
For ISO tolerances refer to Appendix F.					
48.0	63.0	6.3	48.0	330	**M401OD07.5048-6.3A**
50.0	65.0	6.3	50.0	331	**M401OD07.5050-6.3A**
52.0	67.0	6.3	52.0	331	**M401OD07.5052-6.3A**
55.0	70.0	6.3	55.0	332	**M401OD07.5055-6.3A**
56.0	71.0	6.3	56.0	333	**M401OD07.5056-6.3A**
60.0	75.0	6.3	60.0	334	**M401OD07.5060-6.3A**
63.0	78.0	6.3	63.0	335	**M401OD07.5063-6.3A**
65.0	80.0	6.3	65.0	335	**M401OD07.5065-6.3A**
70.0	85.0	6.3	70.0	337	**M401OD07.5070-6.3A**
75.0	90.0	6.3	75.0	339	**M401OD07.5075-6.3A**
80.0	95.0	6.3	80.0	340	**M401OD07.5080-6.3A**
85.0	100.0	6.3	85.0	342	**M401OD07.5085-6.3A**
90.0	105.0	6.3	90.0	343	**M401OD07.5090-6.3A**
95.0	110.0	6.3	95.0	345	**M401OD07.5095-6.3A**
100.0	115.0	6.3	100.0	347	**M401OD07.5100-6.3A**
105.0	120.0	6.3	105.0	348	**M401OD07.5105-6.3A**
110.0	125.0	6.3	110.0	350	**M401OD07.5110-6.3A**
115.0	130.0	6.3	115.0	351	**M401OD07.5115-6.3A**
120.0	135.0	6.3	120.0	353	**M401OD07.5120-6.3A**
125.0	140.0	6.3	125.0	354	**M401OD07.5125-6.3A**
130.0	145.0	6.3	130.0	356	**M401OD07.5130-6.3A**
135.0	150.0	6.3	135.0	358	**M401OD07.5135-6.3A**
140.0	155.0	6.3	140.0	359	**M401OD07.5140-6.3A**
150.0	165.0	6.3	150.0	362	**M401OD07.5150-6.3A**
160.0	175.0	6.3	160.0	363	**M401OD07.5160-6.3A**
170.0	185.0	6.3	170.0	365	**M401OD07.5170-6.3A**
180.0	195.0	6.3	180.0	366	**M401OD07.5180-6.3A**
190.0	205.0	6.3	190.0	368	**M401OD07.5190-6.3A**
200.0	220.6	8.1	200.0	446	**M401OD10.3200-8.1A**
210.0	230.6	8.1	210.0	446	**M401OD10.3210-8.1A**
220.0	240.6	8.1	220.0	447	**M401OD10.3220-8.1A**
230.0	250.6	8.1	230.0	448	**M401OD10.3230-8.1A**
240.0	260.6	8.1	240.0	449	**M401OD10.3240-8.1A**
250.0	270.6	8.1	250.0	450	**M401OD10.3250-8.1A**
260.0	280.6	8.1	260.0	450	**M401OD10.3260-8.1A**
270.0	294.2	8.1	270.0	452	**M401OD12.1270-8.1A**
280.0	304.2	8.1	280.0	453	**M401OD12.1280-8.1A**
290.0	314.2	8.1	290.0	454	**M401OD12.1290-8.1A**
300.0	324.2	8.1	300.0	455	**M401OD12.1300-8.1A**
320.0	344.2	8.1	320.0	458	**M401OD12.1320-8.1A**
350.0	374.2	8.1	350.0	458	**M401OD12.1350-8.1A**
360.0	384.2	8.1	360.0	462	**M401OD12.1360-8.1A**
400.0	424.2	8.1	400.0	367	**M401OD12.1400-8.1A**
420.0	444.2	8.1	420.0	463	**M401OD12.1420-8.1A**
450.0	474.2	8.1	450.0	466	**M401OD12.1450-8.1A**
460.0	484.2	8.1	460.0	468	**M401OD12.1460-8.1A**
480.0	504.2	8.1	480.0	469	**M401OD12.1480-8.1A**
500.0	524.2	8.1	500.0	469	**M401OD12.1500-8.1A**

*If used with wear rings, refer to wear ring throat diameter, see Section 9.
For custom groove calculations, see Appendix C.

NOTE: For sizes larger than those shown in the table, please contact your local Parker Seal representative.

09/01/07

Parker Hannifin Corporation
Engineered Polymer Systems Division
Phone: 801 972 3000

V6 Profile, Cushion Seal

The V6 profile provides a check valve type action for use in cushioning pneumatic cylinders. The V6 profile seals against the cushioning piston or spud, allowing pneumatic pressure to build and cushion the cylinder's end stroke. Through a series of slots and pedestals the intake flow is then able to easily blow past the cushion seal to fill the cylinder. The installation of the cushion seal is very simple as it manually snaps into the groove recess. The V6 profile is available in proprietary Parker compounds formulated for low friction, extrusion resistance, and high temperature. The V6 profile can be used in a wide variety of NFPA cylinders and will provide excellent performance and long life.

Technical Data

Standard Materials*	Temperature Range	Pressure Range†	Surface Speed
P4622A90	-65°F to 225°F (-54°C to 107°C)	250 psi (17 bar)	< 3 ft/s (1 m/s)
N4180A80	-40°F to 250°F (-40°C to 121°C)	250 psi (17 bar)	< 3 ft/s (1 m/s)
N4181A80	-40°F to 250°F (-40°C to 121°C)	250 psi (17 bar)	< 3 ft/s (1 m/s)
V4208A90	-5°F to 400°F (-21°C to 204°C)	250 psi (17 bar)	< 3 ft/s (1 m/s)

***Alternate Materials:** For applications that may require an alternate material, please contact your local Parker Seal representative.

†Pressure Range without wear rings (see Table 2-4, page 2-5).

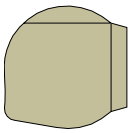

V6 Cross-Section

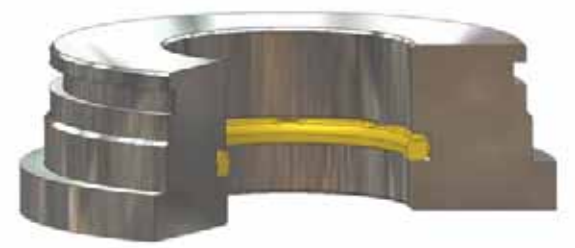

V6 Installed in Rod Gland

Part Number Nomenclature — V6 Profile

Table 5-35. V6 Profile — Inch

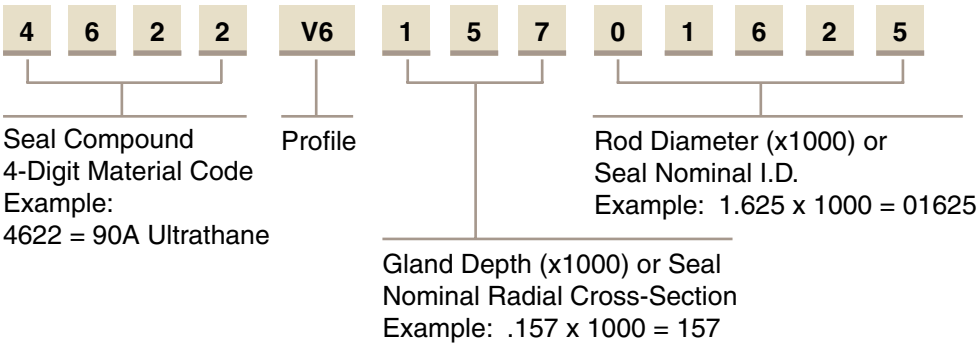

Gland Dimensions — V6 Profile

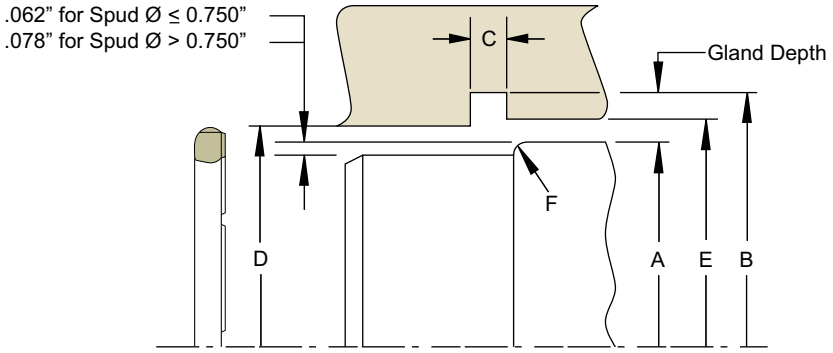

Please refer to Engineering Section 2, page 2-8 for surface finish and additional hardware considerations.

Table 5-36. V6 Gland Dimensions — Inch

Nominal Spud Diameter	A Spud Diameter	B Groove Diameter	C Groove Width	D Throat Diameter	E Throat Diameter	F Spud End Radius	Compound Codes (X = Standard Offering)			Part Number	
							4622	4180	4208	Compound Code	
3/8	0.368/0.370	0.685/0.689	0.181/0.197	0.390/0.393	0.449/0.453	0.118	X	X	X	**XXXX**	**V615700375**
5/8	0.617/0.620	0.935/0.940	0.181/0.197	0.640/0.644	0.699/0.703	0.118	X	X	X	**XXXX**	**V615700625**
3/4	0.742/0.745	1.060/1.065	0.181/0.197	0.765/0.769	0.824/0.828	0.118	X	X	X	**XXXX**	**V615700750**
7/8	0.877/0.880	1.195/1.201	0.181/0.197	0.900/0.905	0.959/0.964	0.118	X	X	X	**XXXX**	**V615700875**
1-3/16	1.179/1.184	1.578/1.585	0.228/0.244	1.208/1.215	1.263/1.270	0.157	X			**XXXX**	**V619701187**
1-1/4	1.249/1.253	1.568/1.574	0.181/0.197	1.273/1.279	1.332/1.338	0.118	X	X	X	**XXXX**	**V615701250**
1-5/8	1.620/1.624	1.939/1.945	0.181/0.197	1.644/1.650	1.703/1.709	0.118	X	X	X	**XXXX**	**V615701625**
1-5/8	1.616/1.622	2.016/2.023	0.228/0.244	1.646/1.653	1.701/1.709	0.157	X		X	**XXXX**	**V619701625**
2	1.992/1.997	2.391/2.398	0.228/0.244	2.021/2.028	2.076/2.083	0.157	X	X	X	**XXXX**	**V619702000**
2-1/4	2.242/2.247	2.562/2.569	0.181/0.197	2.267/2.274	2.326/2.333	0.118	X		X	**XXXX**	**V615702250**
2-3/4	2.735/2.740	3.291/3.300	0.323/0.339	2.764/2.771	2.858/2.865	0.197	X		X	**XXXX**	**V627602750**
4-1/4	4.219/4.225	4.776/4.786	0.323/0.339	4.249/4.258	4.343/4.352	0.197	X			**XXXX**	**V627604250**

NOTE: For sizes larger than those shown in the table, please contact your local Parker Seal representative.

Parker Hannifin Corporation
Engineered Polymer Systems Division
Phone: 801 972 3000

Part Number Nomenclature — V6 Profile

Table 5-37. V6 Profile — Metric

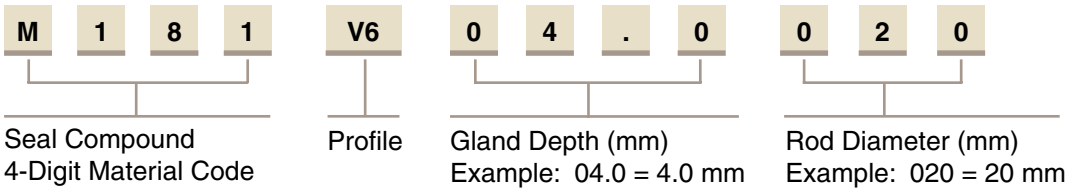

Gland Dimensions — V6 Profile

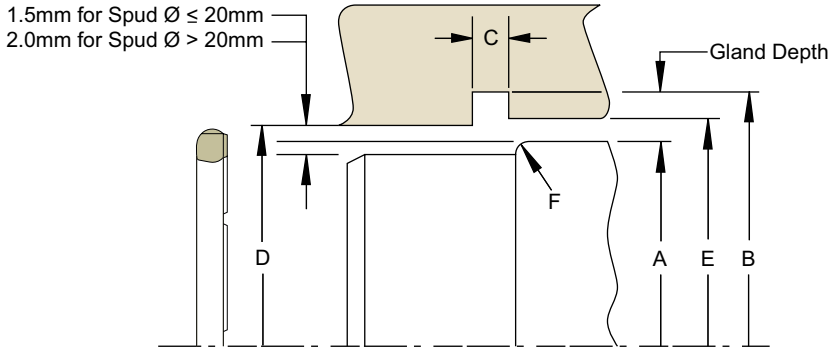

Please refer to Engineering Section 2, page 2-8 for surface finish and additional hardware considerations.

Table 5-38. V6 Gland Dimensions — Metric

Nominal Spud Diameter	A Spud Diameter	B Groove Diameter	C Groove Width	D Throat Diameter	E Throat Diameter	F Spud End Radius	Compound Codes (X = Standard Offering)		Part Number	
							M181	M208	Compound Code	
	h10	H11	+.20/-.00	H11	H11					
For ISO tolerances refer to Appendix F.										
10.0	10.0	18.0	4,8	10.5	12.0	3.0	X	X	XXXX	V604.0010
14.0	14.0	22.0	4,8	14.5	16.0	3.0	X	X	XXXX	V604.0014
16.0	16.0	24.0	4,8	16.5	18.0	3.0	X		XXXX	V604.0016
20.0	20.0	28.0	4,8	20.5	22.0	3.0	X	X	XXXX	V604.0020
22.0	22.0	30.0	4,8	22.5	24.0	3.0	X		XXXX	V604.0022
30.0	30.0	40.0	6.0	30.6	32.0	4.0	X	X	XXXX	V605.0030
32.0	32.0	42.0	6.0	32.6	34.0	4.0	X	X	XXXX	V605.0032
38.0	38.0	48.0	6.0	38.6	40.0	4.0	X	X	XXXX	V605.0038
50.0	50.0	60.0	6.0	50.6	52.0	4.0	X	X	XXXX	V605.0050

NOTE: For sizes larger than those shown in the table, please contact your local Parker Seal representative.

Parker Hannifin Corporation
Engineered Polymer Systems Division
Phone: 801 972 3000

OR Profile, Rotary PTFE Cap Seal

The Parker OR profile is a bi-directional rod seal for use in pneumatic and low to medium duty rotary or oscillating applications. The OR profile is a two piece design comprised of a standard size o-ring energizing a wear resistant PTFE cap. The OR profile offers long wear and low friction without stick-slip. This PTFE outer diameter is designed with a special interference with the o-ring to eliminate spinning between the o-ring and seal. Special grooves are designed into the PTFE inner diameter to provide lubrication and create a labyrinth effect for reduced leakage. The seal is commonly used in swivel joints, hose reels, and machine applications. Parker's OR profile will retrofit non-Parker seals of similar design.

The OR profile may be ordered without the energizer by omitting the energizer code. See part number nomenclature.

Technical Data

Standard Materials*		Temperature Range	Pressure Range†	Surface Speed
Cap				
0205	15% fiberglass-, 5% MoS_2-filled PTFE	-200°F to 575°F (-129°C to 302°C)	3000 psi (206 bar)	< 3.3 ft/s (1.0 m/sec)
Energizer				
A	70A Nitrile	-30°F to 250°F (-34°C to 121°C)		

OR Cross-Section

***Alternate Materials:** For applications that may require an alternate material, please see Section 3 for alternate PTFE (Table 3-4) and energizer (Table 3-5) materials.

†Pressure Range without wear rings (see Table 2-4, page 2-5).

Minimum rotary shaft hardness = 60 Rc.

Note: Small size cross sections feature single outer diameter grooves. Cross sections 305 and greater feature dual grooves.

OR installed on Rotary Shaft Gland

Part Number Nomenclature — OR Profile

Table 5-39. OR Profile — Inch

0 2 0 5 OR 1 4 7 0 2 0 0 0 - 1 2 6 A

Seal Compound
4-Digit Material Code
Example:
0205 = 15% Fiberglass-, 5% MoS_2-filled PTFE

Profile

Gland Depth (x1000)
Example: .147 x 1000 = 147

Bore Diameter (x1000)
Example: 2.000 x 1000 = 02000

Groove Width (x1000)
Example: .126 x 1000 = 126

Energizer Compound Code
Example: A = 70A Nitrile
Omit = No energizer
See Table 3-5 on page 3-18.

Gland Dimensions — OR Profile

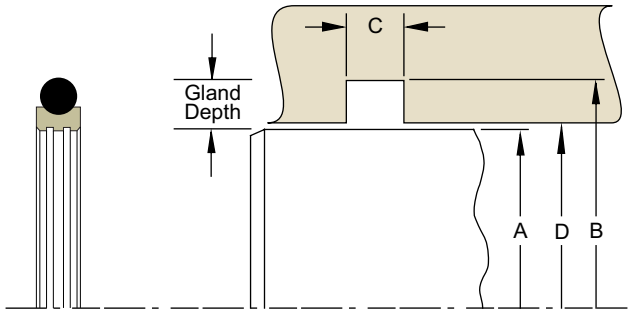

Please refer to Engineering Section 2, Page 2-8 for surface finish and additional hardware considerations.

Table 5-40. OR Gland Dimensions — Inch

A Rod Diameter	B Groove Diameter	C Groove Width	D Throat Diameter*	O-ring Dash Number	Part Number
+.000/-.001	**+.001/-.000**	**+.008/-.000**	**+.002/-.000**		
0.313	0.506	0.087	0.314	012	**0205OR09700313-087A**
0.375	0.568	0.087	0.376	013	**0205OR09700375-087A**
+.000/-.002	**+.002/-.000**	**+.008/-.000**	**+.002/-.000**		
0.438	0.631	0.087	0.439	014	**0205OR09700438-087A**
0.500	0.693	0.087	0.501	015	**0205OR09700500-087A**
0.563	0.756	0.087	0.564	016	**0205OR09700563-087A**
0.625	0.818	0.087	0.626	017	**0205OR09700625-087A**
0.688	0.881	0.087	0.689	018	**0205OR09700688-087A**
0.750	0.943	0.087	0.751	019	**0205OR09700750-087A**
0.813	1.006	0.087	0.814	020	**0205OR09700813-087A**
0.875	1.068	0.087	0.876	021	**0205OR09700875-087A**
0.938	1.131	0.087	0.939	022	**0205OR09700938-087A**
1.000	1.193	0.087	1.001	023	**0205OR09701000-087A**
1.125	1.318	0.087	1.126	025	**0205OR09701125-087A**
1.250	1.443	0.087	1.251	027	**0205OR09701250-087A**
1.375	1.568	0.087	1.376	028	**0205OR09701375-087A**

*If used with wear rings, refer to wear ring throat diameter, see Section 9.
For custom groove calculations, see Appendix C.

Parker Hannifin Corporation
Engineered Polymer Systems Division
Phone: 801 972 3000

Table 5-40. OR Gland Dimensions — Inch (Continued)

A Rod Diameter	B Groove Diameter	C Groove Width	D Throat Diameter*	O-ring Dash Number	Part Number
+.000/-.002	**+.003/-.000**	**+.008/-.000**	**+.002/-.000**		
1.500	1.795	0.126	1.501	130	**0205OR14801500-126A**
1.625	1.920	0.126	1.626	132	**0205OR14801625-126A**
1.750	2.045	0.126	1.751	134	**0205OR14801750-126A**
1.875	2.170	0.126	1.876	135	**0205OR14801875-126A**
+.000/-.003	**+.003/-.000**	**+.008/-.000**	**+.002/-.000**		
2.000	2.295	0.126	2.001	137	**0205OR14802000-126A**
2.125	2.420	0.126	2.126	139	**0205OR14802125-126A**
2.250	2.545	0.126	2.251	141	**0205OR14802250-126A**
2.375	2.670	0.126	2.376	143	**0205OR14802375-126A**
2.500	2.795	0.126	2.501	145	**0205OR14802500-126A**
2.625	2.920	0.126	2.626	147	**0205OR14802625-126A**
2.750	3.045	0.126	2.751	149	**0205OR14802750-126A**
2.875	3.170	0.126	2.876	150	**0205OR14802875-126A**
+.000/-.003	**+.003/-.000**	**+.008/-.000**	**+.003/-.000**		
3.000	3.433	0.165	3.001	235	**0205OR21703000-165A**
3.125	3.558	0.165	3.126	236	**0205OR21703125-165A**
3.250	3.683	0.165	3.251	237	**0205OR21703250-165A**
3.375	3.808	0.165	3.376	238	**0205OR21703375-165A**
3.500	3.933	0.165	3.501	239	**0205OR21703500-165A**
3.625	4.058	0.165	3.626	240	**0205OR21703625-165A**
3.750	4.183	0.165	3.751	241	**0205OR21703750-165A**
3.875	4.308	0.165	3.876	242	**0205OR21703875-165A**
4.000	4.433	0.165	4.001	243	**0205OR21704000-165A**
4.125	4.558	0.165	4.126	244	**0205OR21704125-165A**
4.250	4.683	0.165	4.251	245	**0205OR21704250-165A**
+.000/-.003	**+.004/-.000**	**+.008/-.000**	**+.003/-.000**		
4.375	4.808	0.165	4.376	246	**0205OR21704375-165A**
4.500	4.933	0.165	4.501	247	**0205OR21704500-165A**
4.625	5.058	0.165	4.626	248	**0205OR21704625-165A**
+.000/-.004	**+.004/-.000**	**+.008/-.000**	**+.003/-.000**		
4.750	5.183	0.165	4.751	249	**0205OR21704750-165A**
4.875	5.308	0.165	4.876	250	**0205OR21704875-165A**
5.000	5.433	0.165	5.001	251	**0205OR21705000-165A**
5.125	5.558	0.165	5.126	252	**0205OR21705125-165A**
5.250	5.683	0.165	5.251	253	**0205OR21705250-165A**
5.375	5.808	0.165	5.376	254	**0205OR21705375-165A**
5.500	5.933	0.165	5.501	255	**0205OR21705500-165A**
5.625	6.058	0.165	5.626	256	**0205OR21705625-165A**
5.750	6.183	0.165	5.751	257	**0205OR21705750-165A**
5.875	6.308	0.165	5.876	258	**0205OR21705875-165A**
+.000/-.004	**+.004/-.000**	**+.008/-.000**	**+.004/-.000**		
6.000	6.610	0.248	6.002	362	**0205OR30506000-248A**
6.250	6.860	0.248	6.252	363	**0205OR30506250-248A**
6.500	7.110	0.248	6.502	364	**0205OR30506500-248A**
6.750	7.360	0.248	6.752	365	**0205OR30506750-248A**
7.000	7.610	0.248	7.002	365	**0205OR30507000-248A**

*If used with wear rings, refer to wear ring throat diameter, see Section 9.
For custom groove calculations, see Appendix C.

Parker Hannifin Corporation
Engineered Polymer Systems Division
Phone: 801 972 3000

Table 5-40. OR Gland Dimensions — Inch (Continued)

A Rod Diameter	B Groove Diameter	C Groove Width	D Throat Diameter*	O-ring Dash Number	Part Number
+.000/-.005	**+.005/-.000**	**+.008/-.000**	**+.004/-.000**		
7.250	7.860	0.248	7.252	366	**0205OR30507250-248A**
7.500	8.110	0.248	7.502	367	**0205OR30507500-248A**
7.750	8.360	0.248	7.752	368	**0205OR30507750-248A**
8.000	8.610	0.248	8.002	369	**0205OR30508000-248A**
8.250	8.860	0.248	8.252	370	**0205OR30508250-248A**
8.500	9.110	0.248	8.502	371	**0205OR30508500-248A**
8.750	9.360	0.248	8.752	372	**0205OR30508750-248A**
9.000	9.610	0.248	9.002	373	**0205OR30509000-248A**
9.250	9.860	0.248	9.252	374	**0205OR30509250-248A**
9.500	10.110	0.248	9.502	375	**0205OR30509500-248A**
9.750	10.360	0.248	9.752	376	**0205OR30509750-248A**
10.000	10.610	0.248	10.002	377	**0205OR30510000-248A**
10.500	11.110	0.248	10.502	378	**0205OR30510500-248A**
11.000	11.610	0.248	11.002	379	**0205OR30511000-248A**
11.500	12.110	0.248	11.502	380	**0205OR30511500-248A**
+.000/-.006	**+.006/-.000**	**+.008/-.000**	**+.005/-.000**		
12.000	12.827	0.319	12.002	453	**0205OR41412000-319A**
12.500	13.327	0.319	12.502	454	**0205OR41412500-319A**
13.000	13.827	0.319	13.002	455	**0205OR41413000-319A**
13.500	14.327	0.319	13.502	456	**0205OR41413500-319A**
14.000	14.827	0.319	14.002	457	**0205OR41414000-319A**
14.500	15.327	0.319	14.502	458	**0205OR41414500-319A**
15.000	15.827	0.319	15.002	459	**0205OR41415000-319A**
15.500	16.327	0.319	15.502	460	**0205OR41415500-319A**
16.000	16.827	0.319	16.002	461	**0205OR41416000-319A**
16.500	17.327	0.319	16.502	462	**0205OR41416500-319A**
17.000	17.827	0.319	17.002	463	**0205OR41417000-319A**
17.500	18.327	0.319	17.502	464	**0205OR41417500-319A**
18.000	18.827	0.319	18.002	465	**0205OR41418000-319A**
18.500	19.327	0.319	18.502	466	**0205OR41418500-319A**
19.000	19.827	0.319	19.002	467	**0205OR41419000-319A**
19.500	20.327	0.319	19.502	468	**0205OR41419500-319A**
+.000/-.007	**+.007-.000**	**+.008/-.000**	**+.005/-.000**		
20.000	20.827	0.319	20.002	469	**0205OR41420000-319A**

*If used with wear rings, refer to wear ring throat diameter, see Section 9.
For custom groove calculations, see Appendix C.

NOTE: For sizes larger than those shown in the table, please contact your local Parker Seal representative.

Parker Hannifin Corporation
Engineered Polymer Systems Division
Phone: 801 972 3000

Part Number Nomenclature — OR Profile

Table 5-41. OR Profile — Metric

M	2	0	5	OR	0	7	.	8	2	0	0	-	6	.	3	A

4-Digit Material Code
(First digit "4" replaced with "M" for Metric)
Example:
M205 = 15% Fiberglass-, 5% MoS_2-filled PTFE

Profile

Gland Depth (mm)
Example: 07.8 = 7.8 mm

Rod Diameter (mm)
(3 digits; use leading zeros if needed)
Example: 002 = 2 mm
020 = 20 mm
200 = 200 mm

Groove Width
Example: 6.3 = 63 mm

Energizer Compound Code
Example: A = 70A Nitrile
Omit = No energizer
See Table 3-5 on page 3-18.

Gland Dimensions — OR Profile

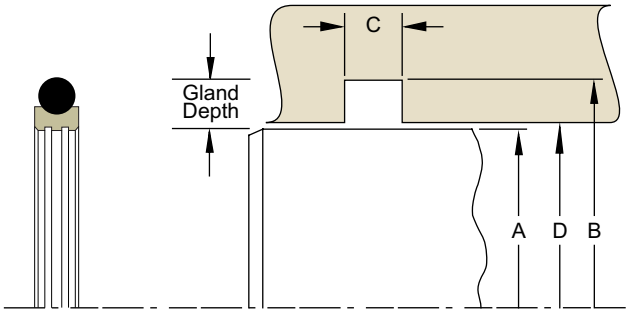

Please refer to Engineering Section 2, Page 2-8 for surface finish and additional hardware considerations.

Table 5-42. OR Gland Dimensions — Metric

A Rod Diameter	B Groove Diameter	C Groove Width	D Throat Diameter*	O-ring Dash Number	Part Number
f7	H9	+.20/-.00	H8		
For ISO tolerances refer to Appendix F.					
6.0	10.9	2.2	6.0	011	**M205OR02.5006-2.2A**
8.0	12.9	2.2	8.0	012	**M205OR02.5008-2.2A**
10.0	14.9	2.2	10.0	013	**M205OR02.5010-2.2A**
12.0	16.9	2.2	12.0	014	**M205OR02.5012-2.2A**
14.0	18.9	2.2	14.0	016	**M205OR02.5014-2.2A**
15.0	19.9	2.2	15.0	016	**M205OR02.5015-2.2A**
16.0	20.9	2.2	16.0	017	**M205OR02.5016-2.2A**
18.0	22.9	2.2	18.0	018	**M205OR02.5018-2.2A**
20.0	27.5	3.2	20.0	118	**M205OR03.8020-3.2A**
22.0	29.5	3.2	22.0	119	**M205OR03.8022-3.2A**
25.0	32.5	3.2	25.0	121	**M205OR03.8025-3.2A**
28.0	35.5	3.2	28.0	123	**M205OR03.8028-3.2A**
30.0	37.5	3.2	30.0	124	**M205OR03.8030-3.2A**
32.0	39.5	3.2	32.0	126	**M205OR03.8032-3.2A**
35.0	42.5	3.2	35.0	127	**M205OR03.8035-3.2A**
36.0	43.5	3.2	36.0	128	**M205OR03.8036-3.2A**
40.0	51.0	4.2	40.0	224	**M205OR05.5040-4.2A**
42.0	53.0	4.2	42.0	224	**M205OR05.5042-4.2A**

*If used with wear rings, refer to wear ring throat diameter, see Section 9.
For custom groove calculations, see Appendix C.

09/01/07

Parker Hannifin Corporation
Engineered Polymer Systems Division
Phone: 801 972 3000

Table 5-42. OR Gland Dimensions — Metric (continued)

A Rod Diameter	B Groove Diameter	C Groove Width	D Throat Diameter*	O-ring Dash Number	Part Number
f7	H9	+.20/-.00	H8		
For ISO tolerances refer to Appendix F.					
45.0	56.0	4.2	45.0	225	**M205OR05.5045-4.2A**
48.0	59.0	4.2	48.0	226	**M205OR05.5048-4.2A**
50.0	61.0	4.2	50.0	227	**M205OR05.5050-4.2A**
52.0	63.0	4.2	52.0	227	**M205OR05.5052-4.2A**
55.0	66.0	4.2	55.0	228	**M205OR05.5055-4.2A**
56.0	67.0	4.2	56.0	229	**M205OR05.5056-4.2A**
60.0	71.0	4.2	60.0	230	**M205OR05.5060-4.2A**
63.0	74.0	4.2	63.0	231	**M205OR05.5063-4.2A**
65.0	76.0	4.2	65.0	232	**M205OR05.5065-4.2A**
70.0	81.0	4.2	70.0	233	**M205OR05.5070-4.2A**
75.0	86.0	4.2	75.0	234	**M205OR05.5075-4.2A**
80.0	91.0	4.2	80.0	236	**M205OR05.5080-4.2A**
85.0	96.0	4.2	85.0	237	**M205OR05.5085-4.2A**
90.0	101.0	4.2	90.0	239	**M205OR05.5090-4.2A**
95.0	106.0	4.2	95.0	241	**M205OR05.5095-4.2A**
100.0	111.0	4.2	100.0	243	**M205OR05.5100-4.2A**
105.0	116.0	4.2	105.0	242	**M205OR05.5105-4.2A**
110.0	121.0	4.2	110.0	246	**M205OR05.5110-4.2A**
115.0	126.0	4.2	115.0	247	**M205OR05.5115-4.2A**
120.0	131.0	4.2	120.0	248	**M205OR05.5120-4.2A**
125.0	136.0	4.2	125.0	250	**M205OR05.5125-4.2A**
130.0	141.0	4.2	130.0	251	**M205OR05.5130-4.2A**
135.0	146.0	4.2	135.0	253	**M205OR05.5135-4.2A**
140.0	151.0	4.2	140.0	255	**M205OR05.5140-4.2A**
150.0	161.0	4.2	150.0	257	**M205OR05.5150-4.2A**
160.0	171.0	4.2	160.0	259	**M205OR05.5160-4.2A**
170.0	181.0	4.2	170.0	261	**M205OR05.5170-4.2A**
180.0	191.0	4.2	180.0	263	**M205OR05.5180-4.2A**
190.0	201.0	4.2	190.0	264	**M205OR05.5190-4.2A**
200.0	215.5	6.3	200.0	369	**M205OR07.8200-6.3A**
210.0	225.5	6.3	210.0	370	**M205OR07.8210-6.3A**
220.0	235.5	6.3	220.0	372	**M205OR07.8220-6.3A**
230.0	245.5	6.3	230.0	374	**M205OR07.8230-6.3A**
240.0	255.5	6.3	240.0	375	**M205OR07.8240-6.3A**
250.0	265.5	6.3	250.0	377	**M205OR07.8250-6.3A**
280.0	301.0	8.1	280.0	451	**M205OR10.5280-8.1A**
300.0	321.0	8.1	300.0	453	**M205OR10.5300-8.1A**
320.0	341.0	8.1	320.0	454	**M205OR10.5320-8.1A**
350.0	371.0	8.1	350.0	456	**M205OR10.5350-8.1A**
360.0	381.0	8.1	360.0	457	**M205OR10.5360-8.1A**
400.0	421.0	8.1	400.0	460	**M205OR10.5400-8.1A**
420.0	441.0	8.1	420.0	462	**M205OR10.5420-8.1A**
450.0	471.0	8.1	450.0	465	**M205OR10.5450-8.1A**
480.0	501.0	8.1	480.0	467	**M205OR10.5480-8.1A**
500.0	521.0	8.1	500.0	469	**M205OR10.5500-8.1A**
600.0	621.0	8.1	600.0	472	**M205OR10.5600-8.1A**

*If used with wear rings, refer to wear ring throat diameter, see Section 9.
For custom groove calculations, see Appendix C.

NOTE: For sizes larger than those shown in the table, please contact your local Parker Seal representative.

Parker Hannifin Corporation
Engineered Polymer Systems Division
Phone: 801 972 3000

Symmetrical Seals for Rod or Piston Applications

Contents

Product Offering 6-2
Decision Tree ..... 5-3 and 5-4, ... 7-3 and 7-4
PolyPak Sealing..... 6-3
Profiles
- Standard PolyPak 6-6
- Deep PolyPak 6-8
- Type B PolyPak..... 6-10
- SL 6-39
- US 6-42
- 8400 and 8500 6-49
- AN6226 6-55
- Spiral Vee 6-59

Symmetrical Profiles

Parker symmetrical profiles are designed to fit the center of the gland. They are categorized as symmetrical profiles because the shape of the outside diameter sealing lip matches the shape of the inside diameter sealing lip. This symmetrical design, with its centered fit in the gland, allows the profile to function either as a rod or piston seal. Parker's wide range of profile options, proprietary compounds, and sizes establish Parker as a leader in the industry, providing quality solutions for pneumatic and hydraulic applications.

Parker Hannifin Corporation
Engineered Polymer Systems Division
Phone: 801 972 3000

Symmetrical Seal Product Offering (For Rod or Piston Applications)

Profiles

Table 6-1: Product Profiles

Series	Description	Application (Duty)				Page
		Light	Medium	Heavy	Pneumatic	
SPP	Square Cross-Section O-ring Energized Lip Seal					6-6
DPP 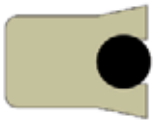	O-ring Loaded Lip Seal with Scraper Lip Design					6-8
BPP 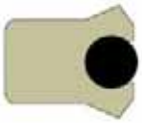	O-ring Energized Lip Seal with Beveled Lip Design					6-10
SL	Dual Compound Dual Lip Seal					6-39
US	Symmetrical U-cup Seal					6-42

Series	Description	Application (Duty)				Page
		Light	Medium	Heavy	Pneumatic	
8400	Light Load U-cup with Beveled Lips					6-49
8500	Light Load U-cup with Scraper Lips					6-49
AN6226	Symmetrical U-cup per Army Navy (AN) Specification					6-55
Spiral	Cut to Size Chevron Packing					6-59

Symmetrical Seal Decision Tree

The Symmetrical product offerings are a part of the Decision Trees in the Rod and Piston sections (Sections 5 and 7). These Decision Trees are found on pages 5-3, 5-4, 7-3 and 7-4.

Parker Hannifin Corporation
Engineered Polymer Systems Division
Phone: 801 972 3000

PolyPak Sealing

Parker's PolyPak seal is a patented precision molded multi-purpose seal. The Parker PolyPak combines an o-ring type synthetic rubber o-spring with a conventional lip-type seal to produce a unique sealing device capable of sealing both vacuum, high and low pressure.

Conventional lip seals, such as the standard u-cups are prone to leakage under low pressure because little or no lip loading is inherent in the basic seal design. The Parker PolyPak however, is a squeeze type seal and provides high sealability at low pressure. As system pressure increases, additional force is applied to the PolyPak's seal interface and as pressure continues to increase, lip loading is automatically increased to compensate for this higher pressure and thus maintain a positive, leak-free seal from hard vacuum to over 60,000 psi with proper design and auxiliary devices.

In addition to providing superior sealing in vacuum, low and high pressure applications, the PolyPak seal offers a number of distinct advantages over conventional symmetrical or non-symmetrical u-cup seals including:

- The PolyPak's o-spring stabilizes the seal under extreme pressures, preventing seal lip distortion and rolling or twisting in the gland.
- At low or high temperature extremes, the o-spring maintains lip loading on both I.D. and O.D. of the seal interface.
- The PolyPak seal can be stretched or squeezed to accommodate oversize cylinder bores and undersize rods. As long as the seal cross-section is correct in relation to the radial groove dimensions, the PolyPak will compensate and maintain proper lip loading.
- The range of materials available to the user of the PolyPak seal insures the proper combination for abrasion, extrusion, temperature resistance and fluid compatability which produces high sealability and long life.

PolyPak seals are available in three styles:

1. Standard PolyPak (SPP Profile)
2. Deep PolyPak (DPP Profile)
3. Type B PolyPak (BPP Profile)

Parker Hannifin Corporation
Engineered Polymer Systems Division
Phone: 801 972 3000

Rod Sealing with PolyPak Seals

As a general rule, rod seals are more critical in nature than their companion piston seals. With increasing OEM requirements for “dry rod” capability, both to conserve system fluid and avoid leakage, the design and selection of the rod seal can be more challenging than its piston counterpart.

Parker recommends the use of the Type B PolyPak (BPP Profile) for rod seal applications due to its design features, including:

- Excellent film-breaking capability of the beveled lip design
- The higher level of lip loading provided by the Type B offers maximum sealability
- The long body of the design provides maximum stability

Piston Sealing with PolyPak Seals

Piston seals can be classified in two categories: single-acting and double-acting. The single acting seal is only required to seal in a single direction as system pressure is seen on only one end of the piston (return of the piston in a single-acting system is accomplished either by gravity or spring loading). The double-acting cylinder requires that the piston be sealed in both directions of stroke as system fluid is applied to one side or the other to achieve movement.

Please see the individual PolyPak profile pages for explanation and differentiation on selecting PolyPak profiles for piston applications.

PolyPak Material Combinations

PolyPak seals can be configured in numerous o-spring energizer and shell combinations. Table 6-2 represents “standard” combinations. Care should be taken to insure that both the PolyPak shell and its companion o-spring energizer are compatible with the system temperature, pressure, and fluid requirements.

Table 6-2. Standard Shell and O-spring Energizer Combinations for PolyPak Seals

PolyPak Shell	O-spring Energizer
Molythane	70A Nitrile
PolyMyte	70A Nitrile, 75A FKM
Nitroxile	70A Nitrile
Ethylene Propylene	80A EPR
Fluorocarbon	75A FKM
All Plastic and Rubber	Metal O-spring

Parker's “smart” part numbering provides for varying standard and custom PolyPak shell and o-spring energizer material combinations. Please refer to the part number nomenclature tables and Technical Data in the PolyPak profile pages for PolyPak shell material options. See Table 6-3 for standard and custom o-spring energizer option details.

Positively-Actuated Back-ups Option

PolyPak seals can be designed with positively-actuated back-ups by designating that option in the part number. See page 10-21 for an explanation of the features of positively-actuated back-ups.

Parker Hannifin Corporation
Engineered Polymer Systems Division
Phone: 801 972 3000

Table 6-3. PolyPak O-spring Energizers

Standard O-spring Energizer		
O-spring Energizer Code	**Type of PolyPak**	**Description**
– (dash)	Urethane (4615, 4622)	70A NBR o-spring energizer
	Rubber	Indicates that the o-spring material family is to match the rubber Polypak shell material family. Example: XNBR 4263 PolyPak shell: code (“–”) indicates NBR o-ring EPR 4207 PolyPak shell: code (“–”) indicates EPR o-ring FKM 4208 PolyPak shell: code (“–”) indicates FKM o-ring FKM 4266 PolyPak shell: code (“–”) indicates FKM o-ring
	PolyMyte (4651)	must be replaced by a custom o-spring energizer code

Custom O-spring Energizers	
O-spring Energizer Code	**Energizer Description**
C	Continuous o-ring
E	General EPR o-ring
J	General HNBR o-ring
L	Canted coil, spring-loaded with oval spring cavity
N	General nitrile o-ring
R	Low swell nitrile o-ring
S	Spring energizer with o-ring groove
U	Geothermal EPR o-ring
V	Fluorocarbon o-ring
W	Nuclear grade EPR o-ring
X	Premium grade low-temperature o-ring
Y	Low temperature nitrile o-ring

Parker Hannifin Corporation
Engineered Polymer Systems Division
Phone: 801 972 3000

Symmetrical Seal
SPP Profile, Standard PolyPak

SPP Profile, Standard PolyPak, Square Cross-Section O-ring Energized Lip Seal

Parker's Standard PolyPak is a squeeze seal with a symmetrical profile for use in either rod or piston applications. The standard Molythane shell provides high wear resistance and the o-ring energizer functions as a spring to maintain sealing contact under low pressure. The Standard PolyPak utilizes a scraper lip design formed by a precision trimming process. The scraper edge wipes both fluid film and contamination away from the seal. A wide selection of sizes and alternate compounds allow this profile to match up with many hydraulic applications. The Standard PolyPak is an economical choice as a stand alone rod or piston seal. With less squeeze force than the Deep or Type B profiles, the Standard PolyPak can be installed back to back, in separate glands, for bi-directional sealing. To protect against pressure trapping, it is recommended that the o-ring be removed from the Standard PolyPak facing the lower pressure side of the application.

Standard PolyPak Cross-Section

Technical Data

Standard Materials*	Temperature Range	Pressure Range†	Surface Speed
Shell			
P4615A90	-65°F to 200°F (-54°C to 93°C)	5000 psi (345 bar)	< 1.6 ft/s (0.5 m/s)
P4622A90	-65°F to 225°F (-54°C to 107°C)	5000 psi (345 bar)	< 1.6 ft/s (0.5 m/s)
Z4651D60	-65°F to 275°F (-54°C to 135°C)	7000 psi (482 bar)	< 1.6 ft/s (0.5 m/s)
N4263A90	-20°F to 275°F (-29°C to 135°C)	2000 psi (138 bar)	< 1.6 ft/s (0.5 m/s)
E4207A90	-65°F to 300°F (-54°C to 149°C)	2000 psi (138 bar)	< 1.6 ft/s (0.5 m/s)
V4208A90	-5°F to 400°F (-21°C to 204°C)	2250 psi (155 bar)	< 1.6 ft/s (0.5 m/s)
V4266A95	-5°F to 400°F (-21°F to 204°C)	2250 psi (155 bar)	< 1.6 ft/s (0.5 m/s)

Energizer

For Seals With...	Standard Energizer Material*
4615 or 4622 PolyPak shell	Standard energizer is a nitrile o-ring
4651 PolyPak shell	O-spring energizer code must be identified
Rubber PolyPak shell	Standard energizer is an o-ring from the same rubber material family as the shell

***Alternate Materials:** For custom energizer materials, see Table 6-3. For applications that may require an alternate shell material, please see Section 3 or contact your local Parker Seal representative.

†**Pressure Range** without wear rings (see Table 2-4, page 2-5).

09/01/07

Parker Hannifin Corporation
Engineered Polymer Systems Division
Phone: 801 972 3000

www.parkerseals.com

Standard PolyPak installed in Rod Gland

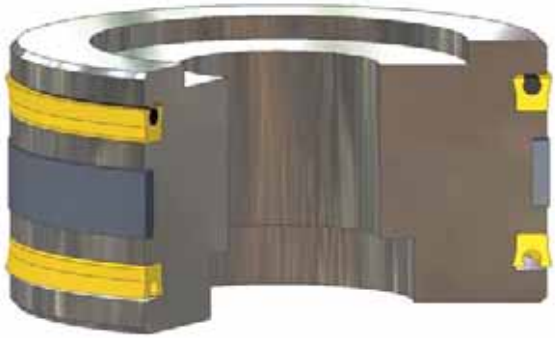

Standard PolyPak installed in Piston Gland

Part Number Nomenclature — Standard PolyPak Profile

Table 6-4. Standard PolyPak Profile — Inch

4	6	1	5	2	5	0	0	2	5	0	0	
4 Digit Material Code Example: 4615 = 90A Molythane				Gland Depth (x1000) or Seal Nominal Radial Cross-Section Example: .250 x 1000 = 250			Seal Nominal I.D. (x1000) Example: 2.500 x 1000 = 02500					Energizer Material Code Omit = Standard For custom energizer options, see Table 6-3.

6

Gland Dimensions — Standard PolyPak Profile

Standard PolyPak gland dimensions are provided on in Table 6-8, page 6-12.

Parker Hannifin Corporation
Engineered Polymer Systems Division
Phone: 801 972 3000

Symmetrical Seal
DPP Profile, Deep PolyPak

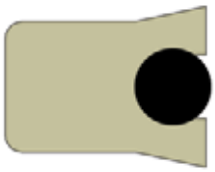

Deep PolyPak Cross-Section

DPP Profile, Deep PolyPak, O-ring Loaded Lip Seal with Scraper Lip Design

Parker's Deep PolyPak is a squeeze seal with a symmetrical profile for use in either rod or piston applications. Its rectangular shape ensures stability in the gland. The standard Molythane shell provides high wear resistance and the o-ring energizer functions as a spring to maintain sealing contact under low pressure or vacuum applications. The Deep PolyPak scraper lip design cuts fluid film and moves contamination away from the seal. The sharp edge of the lip is formed by a precision knife trimming process. A wide selection of sizes and alternate compounds allow this profile to match up with many hydraulic applications. The Deep PolyPak is an economical choice as a stand alone rod or piston seal. Deep PolyPak seals should not be installed back to back in bi-directional piston applications as a pressure trap between the seals may occur.

Technical Data

Standard Materials*	Temperature Range	Pressure Range†	Surface Speed
Shell			
P4615A90	-65°F to 200°F (-54°C to 93°C)	5,000 psi (344 bar)	< 1.6 ft/s (0.5 m/s)
P4622A90	-65°F to 225°F (-54°C to 107°C)	5,000 psi (344 bar)	< 1.6 ft/s (0.5 m/s)
Z4651D60	-65°F to 275°F (-54°C to 135°C)	7,000 psi (482 bar)	< 1.6 ft/s (0.5 m/s)
N4263A90	-20°F to 275°F (-29°C to 135°C)	2,000 psi (137 bar)	< 1.6 ft/s (0.5 m/s)
E4207A90	-65°F to 300°F (-54°C to 149°C)	2,000 psi (137 bar)	< 1.6 ft/s (0.5 m/s)
V4208A90	-5°F to 400°F (-21°C to 204°C)	2250 psi (155 bar)	< 1.6 ft/s (0.5 m/s)
V4266A95	-5°F to 400°F (-21°C to 204°C)	2,250 psi (155 bar)	< 1.6 ft/s (0.5 m/s)

Energizer

For Seals With...	Standard Energizer Material*
4615 or 4622 PolyPak shell	Standard energizer is a nitrile o-ring
4651 PolyPak shell	O-spring energizer code must be identified
Rubber PolyPak shell	Standard energizer is an o-ring from the same rubber material family as the shell

***Alternate Materials:** For custom energizer materials, see Table 6-3. For applications that may require an alternate shell material, please see Section 3 or contact your local Parker Seal representative.

†**Pressure Range** without wear rings (see Table 2-4, page 2-5).

09/01/07

Parker Hannifin Corporation
Engineered Polymer Systems Division
Phone: 801 972 3000

Deep PolyPak installed in Rod Gland

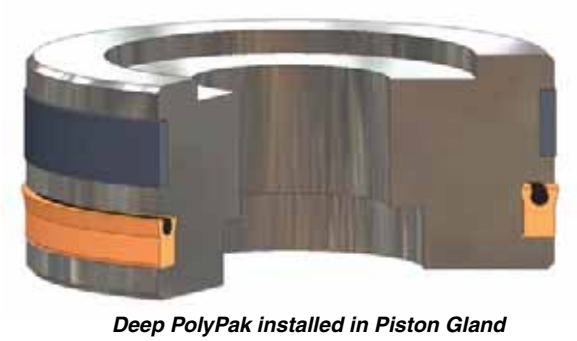

Deep PolyPak installed in Piston Gland

Part Number Nomenclature — Deep PolyPak Profile

Table 6-5. Deep PolyPak Profile — Inch

4	6	1	5	2	5	0	0	2	0	0	0	-	3	7	5

4 Digit Material Code
Example:
4615 = 90A Molythane

Gland Depth (x1000) or Seal Nominal Radial Cross-Section
Example: .250 x 1000 = 250

Seal Nominal I.D. (x1000)
Example:
2.000 x 1000 = 02000

Energizer Material Code
Example:
- (Dash) = 70A Nitrile O-ring
For custom energizer options, see Table 6-3.

Seal Nominal Axial Width (x1000)
Example:
.375 x 1000 = 375

6

Gland Dimensions — Deep PolyPak Profile

Deep PolyPak gland dimensions are provided in Table 6-8, page 6-12.

Parker Hannifin Corporation
Engineered Polymer Systems Division
Phone: 801 972 3000

Symmetrical Seal
BPP Profile, Type B PolyPak

BPP Profile, Type B PolyPak
O-ring Energized Lip Seal with Beveled Lip Design

Parker's Type B PolyPak is a squeeze seal with a symmetrical profile for use in either rod or piston applications. The rectangular shape of its cross section ensures stability in the gland. The standard Molythane shell provides high wear resistance and the o-ring energizer functions as a spring to maintain sealing contact under low pressure or vacuum applications. The beveled lip design of the Type B PolyPak is excellent for cutting fluid film. The sharp beveled lip is formed by a precision knife trimming process. A wide selection of sizes and alternate compounds allow this profile to match up with many hydraulic applications. The Type B PolyPak is an economical choice as a stand-alone seal or can be used in tandem with a buffer seal. In piston applications, this seal will function as a unidirectional seal. Instead, for bi-directional piston sealing, incorporate a PIP ring (see page 7-15). Type B PolyPaks should not be installed back to back, in bi-directional pressure applications, as a pressure trap between the seals may occur.

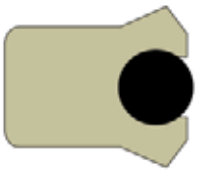

Type B PolyPak Cross-Section

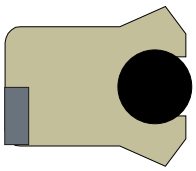

Type B PolyPak with Back-up Cross-Section

Technical Data

Standard Materials*	Temperature Range	Pressure Range†	Surface Speed
Shell			
P4615A90	-65°F to 200°F (-54°C to 93°C)	5,000 psi (344 bar)	< 1.6 ft/s (0.5 m/s)
P4622A90	-65°F to 225°F (-54°C to 107°C)	5,000 psi (344 bar)	< 1.6 ft/s (0.5 m/s)
Z4651D60	-65°F to 275°F (-54°C to 135°C)	7,000 psi (482 bar)	< 1.6 ft/s (0.5 m/s)
N4263A90	-20°F to 275°F (-29°C to 135°C)	7,000 psi (482 bar)	< 1.6 ft/s (0.5 m/s)
E4207A90	-65°F to 300°F (-54°C to 149°C)	2,000 psi (137 bar)	< 1.6 ft/s (0.5 m/s)
V4208A90	-5°F to 400°F (-21°C to 204°C)	2250 psi (155 bar)	< 1.6 ft/s (0.5 m/s)
V4266A95	-5°F to 400°F (-21°C to 204°C)	2,250 psi (155 bar)	< 1.6 ft/s (0.5 m/s)

Energizer

For Seals With...	Standard Energizer Material*
4615 or 4622 PolyPak shell	Standard energizer is a nitrile o-ring
4651 PolyPak shell	O-spring energizer code must be identified
Rubber PolyPak shell	Standard energizer is an o-ring from the same rubber material family as the shell

***Alternate Materials:** For custom energizer materials, see Table 6-3. For applications that may require an alternate shell material, please see Section 3 or contact your local Parker Seal representative.

†Pressure Range without wear rings (see Table 2-4, page 2-5).

09/01/07

Parker Hannifin Corporation
Engineered Polymer Systems Division
Phone: 801 972 3000

www.parkerseals.com

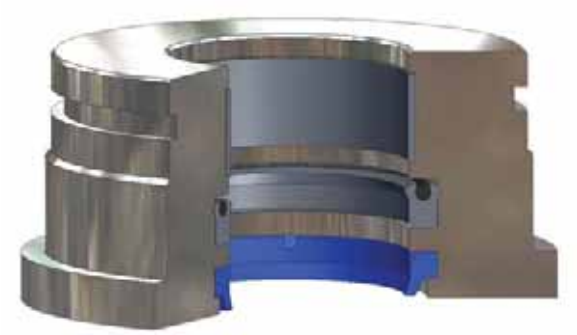

Type B PolyPak installed in Rod Gland

Type B PolyPak installed in Piston Gland

Part Number Nomenclature — Type B PolyPak Profile

Table 6-6. Type B PolyPak Profile — Inch

Optional*

- - -

4 6 1 5 2 5 0 0 2 0 0 0 - 3 7 5 B

4 Digit Material Code
Example:
4615 = 90A Molythane

Gland Depth (x1000) or Seal Nominal Radial Cross-Section
Example: .250 x 1000 = 250

Seal Nominal I.D. (x1000)
Example:
2.000 x 1000 = 02000

Positively-Actuated Back-up Ring
Rod:
R0 = Virgin PTFE
R1 = Nylatron
R12 = PEEK
Piston:
P0 = Virgin PTFE
P1 = Nylatron
P12 = PEEK

Energizer Material Code
Example:
- (Dash) = 70A Nitrile O-ring
For custom energizer options, see Table 6-3.

Seal Nominal Axial Width (x1000)
Example:
.375 x 1000 = 375

Profile

***Tooling may be required.** Do not include this option in the part number if the back-up ring is not required. See Section 10, page 10-21 for a description of positively-actuated back-ups.

Gland Dimensions — Type B PolyPak Profile

Type B PolyPak gland dimensions are provided in Table 6-8, page 6-12.

Parker Hannifin Corporation
Engineered Polymer Systems Division
Phone: 801 972 3000

Standard, Deep and Type B PolyPak Gland Dimensions

Gland Dimensions — Standard, Deep and Type B PolyPak Profiles

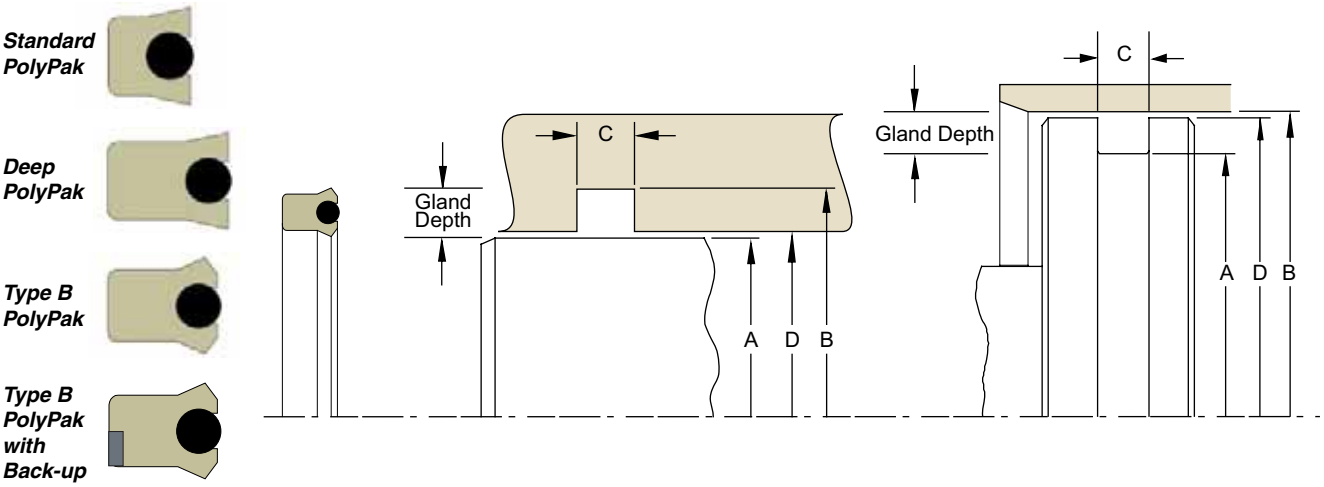

Table 6-7A. Rod Gland Dimension Tolerances

Nominal Gland Depth	A Rod Diameter	B Groove Diameter	C Groove Width	D Throat Diameter
1/8	+.000/-.001	+.002/-.000	+.015/-.000	+.002/-.000
3/16	+.000/-.002	+.002/-.000		+.002/-.000
1/4	+.000/-.002	+.003/-.000		+.003/-.000
5/16	+.000/-.002	+.004/-.000		+.003/-.000
3/8	+.000/-.002	+.005/-.000		+.004/-.000
7/16	+.000/-.003	+.006/-.000		+.004/-.000
1/2	+.000/-.003	+.007/-.000		+.005/-.000
5/8	+.000/-.003	+.009/-.000		+.006/-.000
3/4	+.000/-.004	+.011/-.000		+.007/-.000
1	+.000/-.005	+.015/-.000		+.009/-.000

Please refer to Engineering Section 2, page 2-8 for surface finish and additional hardware considerations.

Table 6-7B. Piston Gland Dimension Tolerances

Nominal Gland Depth	B Bore Diameter	A Groove Diameter	C Groove Width	D Piston Diameter
1/8	+.002/-.000	+.000/-.002	+.015/-.000	+.000/-.001
3/16	+.002/-.000	+.000/-.002		+.000/-.002
1/4	+.003/-.000	+.000/-.003		+.000/-.002
5/16	+.003/-.000	+.000/-.004		+.000/-.002
3/8	+.004/-.000	+.000/-.005		+.000/-.002
7/16	+.005/-.000	+.000/-.006		+.000/-.002
1/2	+.005/-.000	+.000/-.007		+.000/-.003
9/16	+.006/-.000	+.000/-.008		+.000/-.003
5/8	+.006/-.000	+.000/-.009		+.000/-.003
3/4	+.007/-.000	+.000/-.010		+.000/-.004
7/8	+.008/-.000	+.000/-.011		+.000/-.005
1	+.009/-.000	+.000/-.012		+.000/-.005

Table 6-8. Standard, Deep and Type B PolyPak Gland Dimensions

A	B	C		D		Compound Codes (X = Standard Offering)†						Part Number				
Rod Diameter	(Rod) Groove Diameter			Throat Diameter*		Standard PP		Deep PP		Type B						
(Bore) Groove Diameter	Bore Diameter	(Std. PP) Groove Width	(Deep & B) Groove Width		Piston Diameter**	Plastic	Rubber	Plastic	Rubber	Plastic	Rubber	Com-pound Code		Energizer Code	Add to the part number for Type B or Deep only	Add to the part number for Type B only
0.062	0.312	0.138	0.275	0.063	0.311	X						**XXXX**	**12500062**	**–**	**250**	**B**
0.093	0.343	0.138	0.275	0.094	0.342	X	X					**XXXX**	**12500093**	**–**	**250**	**B**
0.125	0.375	0.138	0.275	0.126	0.374	X	X		X	X		**XXXX**	**12500125**	**–**	**250**	**B**
0.140	0.390	0.138	0.275	0.141	0.389	X						**XXXX**	**12500140**	**–**	**250**	**B**

†For plastic compounds, see Table 3-1, page 3-11. For rubber compounds, see Table 3-3, page 3-14.
*If used with wear rings, refer to wear ring throat diameter, see Section 9.
**If used with wear rings, refer to wear ring piston diameter, see Section 9.
For custom groove calculations, see Appendix C.

09/01/07

Parker Hannifin Corporation
Engineered Polymer Systems Division
Phone: 801 972 3000

Table 6-8. Standard, Deep and Type B PolyPak Gland Dimensions — Inch (Continued)

A	B	C		D		Compound Codes (X = Standard Offering)†						Part Number				
Rod Diameter	(Rod) Groove Diameter	(Std. PP) Groove Width	(Deep & B) Groove Width	Throat Diameter*		Standard PP		Deep PP		Type B		Com-pound Code		Energizer Code	Add to the part number for Type B or Deep only	Add to the part number for Type B only
(Bore) Groove Diameter	Bore Diameter				Piston Diameter**	Plastic	Rubber	Plastic	Rubber	Plastic	Rubber					
0.187	0.437	0.138	0.275	0.188	0.436	X	X			X	X	XXXX	12500187	–	250	B
0.187	0.562	0.206	0.343	0.188	0.561	X	X					XXXX	18700187	–	312	B
0.187	0.750	0.309	0.550	0.188	0.749	X						XXXX	28100187	–	500	B
0.218	0.468	0.138	0.275	0.219	0.467					X		XXXX	12500218	–	250	B
0.250	0.500	0.138	0.275	0.251	0.499	X	X	X		X	X	XXXX	12500250	–	250	B
0.250	0.625	0.206	0.343	0.251	0.624	X	X	X		X		XXXX	18700250	–	312	B
0.250	0.750	0.275	0.413	0.251	0.749	X				X		XXXX	25000250	–	375	B
0.250	0.875	0.343	0.550	0.252	0.873	X						XXXX	31200250	–	500	B
0.312	0.562	0.138	0.275	0.313	0.561	X	X	X		X	X	XXXX	12500312	–	250	B
0.312	0.687	0.206	0.343	0.313	0.686	X				X		XXXX	18700312	–	312	B
0.312	0.750	0.240	0.413	0.313	0.749	X						XXXX	21800312	–	375	B
0.312	0.812	0.275	0.413	0.313	0.811	X					X	XXXX	25000312	–	375	B
0.359	0.609	0.138	0.275	0.360	0.608	X						XXXX	12500359	–	250	B
0.375	0.625	0.138	0.206	0.376	0.624	X	X			X		XXXX	12500375	–	187	B
0.375	0.625	0.138	0.275	0.376	0.624					X	X	XXXX	12500375	–	250	B
0.375	0.750	0.206	0.293	0.376	0.749	X	X			X		XXXX	18700375	–	266	B
0.375	0.750	0.206	0.343	0.376	0.749			X	X	X		XXXX	18700375	–	312	B
0.375	0.875	0.275	0.413	0.376	0.874	X	X	X			X	XXXX	25000375	–	375	B
0.375	1.000	0.343	0.550	0.377	0.998	X						XXXX	31200375	–	500	B
0.437	0.687	0.138	0.275	0.438	0.686	X	X	X		X		XXXX	12500437	–	250	B
0.437	0.750	0.172	0.275	0.438	0.749	X						XXXX	15600437	–	250	B
0.437	0.812	0.206	0.343	0.438	0.811	X	X	X		X		XXXX	18700437	–	312	B
0.437	0.875	0.240	0.413	0.438	0.874	X						XXXX	21800437	–	375	B
0.437	0.937	0.275	0.413	0.438	0.936	X	X	X		X		XXXX	25000437	–	375	B
0.437	1.062	0.343	0.550	0.439	1.060	X						XXXX	31200437	–	500	B
0.500	0.750	0.138	0.138	0.501	0.749	X	X			X	X	XXXX	12500500	–	125	B
0.500	0.750	0.138	0.275	0.501	0.749			X	X	X	X	XXXX	12500500	–	250	B
0.500	0.875	0.206	0.343	0.501	0.874	X	X			X	X	XXXX	18700500	–	312	B
0.500	1.000	0.275	0.413	0.501	0.999	X		X		X		XXXX	25000500	–	375	B
0.500	1.125	0.343	0.550	0.502	1.123	X	X					XXXX	31200500	–	500	B
0.500	1.250	0.413	0.688	0.502	1.248	X						XXXX	37500500	–	625	B
0.531	0.781	0.138	0.275	0.532	0.780	X						XXXX	12500531	–	250	B
0.562	0.812	0.138	0.138	0.563	0.811	X	X			X		XXXX	12500562	–	125	B
0.562	0.812	0.138	0.275	0.563	0.811					X	X	XXXX	12500562	–	250	B
0.562	0.936	0.206	0.343	0.563	0.935	X				X	X	XXXX	18700562	–	312	B
0.562	1.000	0.240	0.413	0.563	0.999	X						XXXX	21800562	–	375	B
0.562	1.062	0.275	0.413	0.563	1.061	X				X		XXXX	25000562	–	375	B
0.625	0.875	0.138	0.138	0.626	0.874		X			X	X	XXXX	12500625	–	125	B
0.625	0.875	0.138	0.206	0.626	0.874	X		X		X		XXXX	12500625	–	187	B
0.625	0.875	0.138	0.227	0.626	0.874						X	XXXX	12500625	–	206	B
0.625	0.875	0.138	0.275	0.626	0.874			X	X	X	X	XXXX	12500625	–	250	B
0.625	1.000	0.206	0.343	0.626	0.999	X	X	X	X	X	X	XXXX	18700625	–	312	B

†For plastic compounds, see Table 3-1, page 3-11. For rubber compounds, see Table 3-3, page 3-14.
*If used with wear rings, refer to wear ring throat diameter, see Section 9.
**If used with wear rings, refer to wear ring piston diameter, see Section 9.
For custom groove calculations, see Appendix C.

Parker Hannifin Corporation
Engineered Polymer Systems Division
Phone: 801 972 3000

Table 6-8. Standard, Deep and Type B PolyPak Gland Dimensions — Inch (Continued)

A	B	C		D		Compound Codes (X = Standard Offering)†						Part Number				
Rod Diameter	(Rod) Groove Diameter	(Std. PP) Groove Width	(Deep & B) Groove Width	Throat Diameter*		Standard PP		Deep PP		Type B		Com-pound Code		Energizer Code	Add to the part number for Type B or Deep only	Add to the part number for Type B only
(Bore) Groove Diameter	Bore Diameter				Piston Diameter**	Plastic	Rubber	Plastic	Rubber	Plastic	Rubber					
0.625	1.125	0.275	0.413	0.626	1.124	X	X	X	X	X	X	XXXX	25000625	–	375	B
0.625	1.250	0.343	0.550	0.627	1.248	X						XXXX	31200625	–	500	B
0.625	1.375	0.413	0.688	0.627	1.373	X						XXXX	37500625	–	625	B
0.656	1.031	0.206	0.343	0.657	1.030	X						XXXX	18700656	–	312	B
0.687	0.937	0.138	0.275	0.688	0.936	X	X	X		X	X	XXXX	12500687	–	250	B
0.687	1.061	0.206	0.206	0.688	1.060	X	X				X	XXXX	18700687	–	187	B
0.687	1.061	0.206	0.343	0.688	1.060					X		XXXX	18700687	–	312	B
0.687	1.187	0.275	0.413	0.688	1.186	X				X		XXXX	25000687	–	375	B
0.687	1.250	0.309	0.550	0.688	1.249	X						XXXX	28100687	–	500	B
0.687	1.312	0.343	0.550	0.689	1.310	X						XXXX	31200687	–	500	B
0.750	1.000	0.138	0.138	0.751	0.999	X	X			X		XXXX	12500750	–	125	B
0.750	1.000	0.138	0.206	0.751	0.999					X		XXXX	12500750	–	187	B
0.750	1.000	0.138	0.275	0.751	0.999			X	X	X	X	XXXX	12500750	–	250	B
0.750	1.062	0.172	0.275	0.751	1.061	X						XXXX	15600750	–	250	B
0.750	1.125	0.206	0.275	0.751	1.124			X	X			XXXX	18700750	–	250	B
0.750	1.125	0.206	0.343	0.751	1.124	X	X	X		X	X	XXXX	18700750	–	312	B
0.750	1.188	0.240	0.413	0.751	1.187	X						XXXX	21800750	–	375	B
0.750	1.250	0.275	0.413	0.751	1.249	X	X	X	X	X	X	XXXX	25000750	–	375	B
0.750	1.375	0.343	0.550	0.752	1.373	X	X	X		X		XXXX	31200750	–	500	B
0.750	1.500	0.413	0.688	0.752	1.498	X		X				XXXX	37500750	–	625	B
0.800	1.050	0.138	0.275	0.801	1.049					X		XXXX	12500800	–	250	B
0.812	1.062	0.138	0.138	0.813	1.061	X	X			X		XXXX	12500812	–	125	B
0.812	1.062	0.138	0.275	0.813	1.061					X		XXXX	12500812	–	250	B
0.812	1.186	0.206	0.343	0.813	1.185	X	X	X		X	X	XXXX	18700812	–	312	B
0.812	1.312	0.275	0.413	0.813	1.311	X						XXXX	25000812	–	375	B
0.812	1.436	0.343	0.550	0.814	1.434	X				X		XXXX	31200812	–	500	B
0.875	1.125	0.138	0.138	0.876	1.124	X	X			X	X	XXXX	12500875	–	125	B
0.875	1.125	0.138	0.206	0.876	1.124			X		X		XXXX	12500875	–	187	B
0.875	1.125	0.138	0.275	0.876	1.124			X	X	X	X	XXXX	12500875	–	250	B
0.875	1.250	0.206	0.275	0.876	1.249				X			XXXX	18700875	–	250	B
0.875	1.250	0.206	0.343	0.876	1.249	X	X	X	X	X		XXXX	18700875	–	312	B
0.875	1.250	0.206	0.413	0.876	1.249			X				XXXX	18700875	–	375	B
0.875	1.375	0.275	0.413	0.876	1.374	X	X			X	X	XXXX	25000875	–	375	B
0.875	1.500	0.343	0.550	0.877	1.498	X						XXXX	31200875	–	500	B
0.875	1.625	0.413	0.688	0.877	1.623	X						XXXX	37500875	–	625	B
0.906	1.156	0.138	0.275	0.907	1.155	X						XXXX	12500906	–	250	B
0.937	1.187	0.138	0.275	0.938	1.186	X	X			X		XXXX	12500937	–	250	B
0.937	1.250	0.172	0.275	0.938	1.249	X	X					XXXX	15600937	–	250	B
0.937	1.312	0.206	0.343	0.938	1.311	X	X			X	X	XXXX	18700937	–	312	B
0.937	1.375	0.240	0.413	0.938	1.374	X						XXXX	21800937	–	375	B
0.937	1.437	0.275	0.413	0.938	1.436	X						XXXX	25000937	–	375	B
0.937	1.687	0.413	0.688	0.939	1.685	X						XXXX	37500937	–	625	B

†For plastic compounds, see Table 3-1, page 3-11. For rubber compounds, see Table 3-3, page 3-14.
*If used with wear rings, refer to wear ring throat diameter, see Section 9.
**If used with wear rings, refer to wear ring piston diameter, see Section 9.
For custom groove calculations, see Appendix C.

Parker Hannifin Corporation
Engineered Polymer Systems Division
Phone: 801 972 3000

Table 6-8. Standard, Deep and Type B PolyPak Gland Dimensions — Inch (Continued)

A	B	C		D		Compound Codes (X = Standard Offering)†						Part Number				
Rod Diameter	(Rod) Groove Diameter	(Std. PP) Groove Width	(Deep & B) Groove Width	Throat Diameter*		Standard PP		Deep PP		Type B		Com-pound Code		Energizer Code	Add to the part number for Type B or Deep only	Add to the part number for Type B only
(Bore) Groove Diameter	Bore Diameter				Piston Diameter**	Plastic	Rubber	Plastic	Rubber	Plastic	Rubber					
1.000	1.250	0.138	0.138	1.001	1.249	X	X			X		XXXX	12501000	–	125	B
1.000	1.250	0.138	0.172	1.001	1.249					X		XXXX	12501000	–	156	B
1.000	1.250	0.138	0.189	1.001	1.249			X				XXXX	12501000	–	172	B
1.000	1.250	0.138	0.206	1.001	1.249					X		XXXX	12501000	–	187	B
1.000	1.250	0.138	0.275	1.001	1.249			X	X	X	X	XXXX	12501000	–	250	B
1.000	1.312	0.172	0.172	1.001	1.311	X	X			X		XXXX	15601000	–	156	B
1.000	1.312	0.172	0.257	1.001	1.311					X		XXXX	15601000	–	234	B
1.000	1.375	0.206	0.275	1.001	1.374			X	X			XXXX	18701000	–	250	B
1.000	1.375	0.206	0.343	1.001	1.374	X	X	X	X	X	X	XXXX	18701000	–	312	B
1.000	1.500	0.275	0.275	1.001	1.499	X	X			X		XXXX	25001000	–	250	B
1.000	1.500	0.275	0.413	1.001	1.499			X	X	X	X	XXXX	25001000	–	375	B
1.000	1.625	0.343	0.550	1.002	1.623	X	X	X		X		XXXX	31201000	–	500	B
1.000	1.750	0.413	0.688	1.002	1.748	X	X	X				XXXX	37501000	–	625	B
1.000	1.875	0.481	0.688	1.002	1.873	X						XXXX	43701000	–	625	B
1.000	2.000	0.550	0.825	1.002	1.998	X						XXXX	50001000	–	750	B
1.000	2.000	0.550	0.825	1.002	1.998			X				XXXX	50001000	–	750	B
1.062	1.312	0.138	0.187	1.063	1.311	X	X			X		XXXX	12501062	–	170	B
1.062	1.312	0.138	0.275	1.063	1.311					X		XXXX	12501062	–	250	B
1.062	1.375	0.172	0.275	1.063	1.374	X						XXXX	15601062	–	250	B
1.062	1.436	0.206	0.343	1.063	1.435	X	X	X	X	X		XXXX	18701062	–	312	B
1.062	1.562	0.275	0.413	1.063	1.561	X						XXXX	25001062	–	375	B
1.062	1.687	0.343	0.550	1.064	1.685	X						XXXX	31201062	–	500	B
1.093	1.593	0.275	0.413	1.094	1.592	X						XXXX	25001093	–	375	B
1.125	1.375	0.138	0.129	1.126	1.374	X	X			X		XXXX	12501125	–	117	B
1.125	1.375	0.138	0.195	1.126	1.374					X		XXXX	12501125	–	177	B
1.125	1.375	0.138	0.275	1.126	1.374			X		X	X	XXXX	12501125	–	250	B
1.125	1.500	0.206	0.206	1.126	1.499	X	X			X		XXXX	18701125	–	187	B
1.125	1.500	0.206	0.343	1.126	1.499			X	X	X	X	XXXX	18701125	–	312	B
1.125	1.625	0.275	0.413	1.126	1.624	X	X	X	X	X	X	XXXX	25001125	–	375	B
1.125	1.750	0.343	0.550	1.127	1.748	X	X	X		X		XXXX	31201125	–	500	B
1.125	1.875	0.413	0.688	1.127	1.873	X	X					XXXX	37501125	–	625	B
1.125	2.000	0.481	0.550	1.127	1.998					X		XXXX	43701125	–	500	B
1.125	2.000	0.481	0.688	1.127	1.998	X						XXXX	43701250	–	625	B
1.187	1.437	0.138	0.196	1.188	1.436	X	X			X		XXXX	12501187	–	178	B
1.187	1.437	0.138	0.206	1.188	1.436			X				XXXX	12501187	–	187	B
1.187	1.437	0.138	0.275	1.188	1.436					X	X	XXXX	12501187	–	250	B
1.187	1.500	0.172	0.275	1.188	1.499	X	X					XXXX	15601187	–	250	B
1.187	1.562	0.206	0.343	1.188	1.561	X	X			X		XXXX	18701187	–	312	B
1.187	1.687	0.275	0.413	1.188	1.686	X					X	XXXX	25001187	–	375	B
1.187	1.812	0.343	0.550	1.189	1.810	X		X				XXXX	31201187	–	500	B
1.187	2.000	0.447	0.688	1.189	1.998	X						XXXX	40601187	–	625	B
1.250	1.500	0.138	0.206	1.251	1.499	X	X	X		X	X	XXXX	12501250	–	187	B

†For plastic compounds, see Table 3-1, page 3-11. For rubber compounds, see Table 3-3, page 3-14.
*If used with wear rings, refer to wear ring throat diameter, see Section 9.
**If used with wear rings, refer to wear ring piston diameter, see Section 9.
For custom groove calculations, see Appendix C.

Parker Hannifin Corporation
Engineered Polymer Systems Division
Phone: 801 972 3000

Table 6-8. Standard, Deep and Type B PolyPak Gland Dimensions — Inch (Continued)

A	B	C		D		Compound Codes (X = Standard Offering)†						Part Number				
Rod Diameter	(Rod) Groove Diameter	(Std. PP) Groove Width	(Deep & B) Groove Width	Throat Diameter*		Standard PP		Deep PP		Type B		Com-pound Code		Energizer Code	Add to the part number for Type B or Deep only	Add to the part number for Type B only
(Bore) Groove Diameter	Bore Diameter				Piston Diameter**	Plastic	Rubber	Plastic	Rubber	Plastic	Rubber					
1.250	1.500	0.138	0.275	1.251	1.499				X	X	X	XXXX	12501250	–	250	B
1.250	1.563	0.172	0.275	1.251	1.562	X	X					XXXX	15601250	–	250	B
1.250	1.625	0.206	0.275	1.251	1.624	X	X			X		XXXX	18701250	–	250	B
1.250	1.625	0.206	0.343	1.251	1.624			X	X	X	X	XXXX	18701250	–	312	B
1.250	1.625	0.206	0.413	1.251	1.624					X		XXXX	18701250	–	375	B
1.250	1.750	0.275	0.275	1.251	1.749	X	X			X		XXXX	25001250	–	250	B
1.250	1.750	0.275	0.413	1.251	1.749			X	X	X	X	XXXX	25001250	–	375	B
1.250	1.875	0.343	0.550	1.252	1.873	X		X		X	X	XXXX	31201250	–	500	B
1.250	2.000	0.413	0.688	1.252	1.998	X	X	X		X		XXXX	37501250	–	625	B
1.250	2.063	0.447	0.688	1.252	2.061	X						XXXX	40601250	–	625	B
1.250	2.250	0.550	0.825	1.252	2.248	X						XXXX	50001250	–	750	B
1.250	2.500	0.688	0.963	1.253	2.497	X						XXXX	62501750	–	875	B
1.312	1.562	0.138	0.206	1.313	1.561	X	X			X		XXXX	12501312	–	187	B
1.312	1.625	0.172	0.275	1.313	1.624	X						XXXX	15601312	–	250	B
1.312	1.686	0.206	0.206	1.313	1.685	X	X			X		XXXX	18701312	–	187	B
1.312	1.686	0.206	0.343	1.313	1.685					X		XXXX	18701312	–	312	B
1.312	1.812	0.275	0.413	1.313	1.811	X	X	X		X		XXXX	25001312	–	375	B
1.312	1.937	0.343	0.550	1.314	1.935	X						XXXX	31201312	–	500	B
1.312	2.000	0.377	0.688	1.314	1.998	X						XXXX	34301312	–	625	B
1.312	2.062	0.413	0.481	1.314	2.060	X		X				XXXX	37501312	–	437	B
1.312	2.312	0.550	0.825	1.314	2.310	X						XXXX	50001312	–	750	B
1.375	1.625	0.138	0.138	1.376	1.624	X	X			X		XXXX	12501375	–	125	B
1.375	1.625	0.138	0.196	1.376	1.624					X		XXXX	12501375	–	178	B
1.375	1.625	0.138	0.275	1.376	1.624			X	X	X	X	XXXX	12501375	–	250	B
1.375	1.687	0.172	0.172	1.376	1.686	X	X			X		XXXX	15601375	–	156	B
1.375	1.750	0.206	0.343	1.376	1.749	X	X	X	X	X	X	XXXX	18701375	–	312	B
1.375	1.750	0.206	0.413	1.376	1.749					X		XXXX	18701375	–	375	B
1.375	1.875	0.275	0.413	1.376	1.874	X	X	X	X	X	X	XXXX	25001375	–	375	B
1.375	2.000	0.343	0.550	1.377	1.998	X	X	X	X	X	X	XXXX	31201375	–	500	B
1.375	2.125	0.413	0.688	1.377	2.123	X	X			X		XXXX	37501375	–	625	B
1.375	2.250	0.481	0.688	1.377	2.248	X						XXXX	43701375	–	625	B
1.375	2.375	0.550	0.825	1.377	2.373	X						XXXX	50001375	–	750	B
1.437	1.687	0.138	0.275	1.438	1.686	X	X	X	X	X		XXXX	12501437	–	250	B
1.437	1.812	0.206	0.343	1.438	1.811	X	X	X		X	X	XXXX	18701437	–	312	B
1.437	1.937	0.275	0.413	1.438	1.936		X					XXXX	25001437	–	375	B
1.437	2.061	0.343	0.550	1.439	2.059					X		XXXX	31201437	–	500	B
1.437	2.187	0.413	0.688	1.439	2.185	X						XXXX	37501437	–	625	B
1.437	2.312	0.481	0.688	1.439	2.310	X						XXXX	43701437	–	625	B
1.500	1.750	0.138	0.138	1.501	1.749	X	X			X		XXXX	12501500	–	125	B
1.500	1.750	0.138	0.206	1.501	1.749					X		XXXX	12501500	–	187	B
1.500	1.750	0.138	0.275	1.501	1.749			X		X	X	XXXX	12501500	–	250	B
1.500	1.750	0.138	0.343	1.501	1.749			X				XXXX	12501500	–	312	B

†For plastic compounds, see Table 3-1, page 3-11. For rubber compounds, see Table 3-3, page 3-14.
*If used with wear rings, refer to wear ring throat diameter, see Section 9.
**If used with wear rings, refer to wear ring piston diameter, see Section 9.
For custom groove calculations, see Appendix C.

Table 6-8. Standard, Deep and Type B PolyPak Gland Dimensions — Inch (Continued)

A	B	C		D		Compound Codes (X = Standard Offering)†						Part Number				
Rod Diameter	(Rod) Groove Diameter	(Std. PP) Groove Width	(Deep & B) Groove Width	Throat Diameter*		Standard PP		Deep PP		Type B		Com-pound Code		Energizer Code	Add to the part number for Type B or Deep only	Add to the part number for Type B only
(Bore) Groove Diameter	Bore Diameter				Piston Diameter**	Plastic	Rubber	Plastic	Rubber	Plastic	Rubber					
1.500	1.812	0.172	0.343	1.501	1.811	X				X		XXXX	15601500	–	312	B
1.500	1.875	0.206	0.206	1.501	1.874	X	X			X		XXXX	18701500	–	187	B
1.500	1.875	0.206	0.275	1.501	1.874			X		X	X	XXXX	18701500	–	250	B
1.500	1.875	0.206	0.309	1.501	1.874			X				XXXX	18701500	–	281	B
1.500	1.875	0.206	0.343	1.501	1.874					X		XXXX	18701500	–	312	B
1.500	1.875	0.206	0.413	1.501	1.874			X	X	X	X	XXXX	18701500	–	375	B
1.500	2.000	0.275	0.275	1.501	1.999	X	X			X		XXXX	25001500	–	250	B
1.500	2.000	0.275	0.413	1.501	1.999			X	X	X	X	XXXX	25001500	–	375	B
1.500	2.125	0.343	0.550	1.502	2.123	X	X	X		X	X	XXXX	31201500	–	500	B
1.500	2.250	0.413	0.688	1.502	2.248	X	X			X	X	XXXX	37501500	–	625	B
1.500	2.375	0.481	0.688	1.502	2.373	X						XXXX	43701500	–	625	B
1.500	2.500	0.550	0.825	1.502	2.498	X	X			X		XXXX	50001500	–	750	B
1.562	1.812	0.138	0.275	1.563	1.811	X						XXXX	12501562	–	250	B
1.562	1.937	0.206	0.275	1.563	1.936	X	X	X			X	XXXX	18701562	–	250	B
1.562	2.312	0.413	0.688	1.564	2.310	X						XXXX	37501562	–	625	B
1.625	1.875	0.138	0.275	1.626	1.874	X						XXXX	12501625	–	250	B
1.625	1.875	0.138	0.275	1.626	1.874			X				XXXX	12501625	–	250	B
1.625	2.000	0.206	0.206	1.626	1.999	X	X			X		XXXX	18701625	–	187	B
1.625	2.000	0.206	0.275	1.626	1.999			X				XXXX	18701625	–	250	B
1.625	2.000	0.206	0.293	1.626	1.999					X		XXXX	18701625	–	266	B
1.625	2.000	0.206	0.343	1.626	1.999			X		X		XXXX	18701625	–	312	B
1.625	2.000	0.206	0.413	1.626	1.999			X	X	X	X	XXXX	18701625	–	375	B
1.625	2.125	0.275	0.413	1.626	2.124	X	X			X	X	XXXX	25001625	–	375	B
1.625	2.250	0.343	0.550	1.627	2.248	X	X			X		XXXX	31201625	–	500	B
1.625	2.375	0.413	0.413	1.627	2.373	X	X			X		XXXX	37501625	–	375	B
1.625	2.375	0.413	0.688	1.627	2.373					X		XXXX	37501625	–	625	B
1.687	1.937	0.138	0.275	1.688	1.936	X						XXXX	12501687	–	250	B
1.687	2.062	0.206	0.413	1.688	2.061			X				XXXX	18701687	–	375	B
1.687	2.312	0.343	0.550	1.689	2.310	X				X		XXXX	31201687	–	500	B
1.750	2.000	0.138	0.138	1.751	1.999	X	X			X		XXXX	12501750	–	125	B
1.750	2.000	0.138	0.275	1.751	1.999			X				XXXX	12501750	–	250	B
1.750	2.125	0.206	0.206	1.751	2.124	X	X				X	XXXX	18701750	–	187	B
1.750	2.125	0.206	0.253	1.751	2.124			X		X		XXXX	18701750	–	230	B
1.750	2.125	0.206	0.275	1.751	2.124				X			XXXX	18701750	–	250	B
1.750	2.125	0.206	0.293	1.751	2.124					X	X	XXXX	18701750	–	266	B
1.750	2.125	0.206	0.343	1.751	2.124					X	X	XXXX	18701750	–	312	B
1.750	2.125	0.206	0.413	1.751	2.124			X	X	X	X	XXXX	18701750	–	375	B
1.750	2.188	0.240	0.413	1.751	2.187	X						XXXX	21801750	–	375	B
1.750	2.250	0.275	0.275	1.751	2.249	X	X			X		XXXX	25001750	–	250	B
1.750	2.250	0.275	0.413	1.751	2.249			X	X	X	X	XXXX	25001750	–	375	B
1.750	2.375	0.343	0.550	1.752	2.373	X	X	X	X	X	X	XXXX	31201750	–	500	B
1.750	2.500	0.413	0.688	1.752	2.498	X	X			X	X	XXXX	37501750	–	625	B

†For plastic compounds, see Table 3-1, page 3-11. For rubber compounds, see Table 3-3, page 3-14.
*If used with wear rings, refer to wear ring throat diameter, see Section 9.
**If used with wear rings, refer to wear ring piston diameter, see Section 9.
For custom groove calculations, see Appendix C.

Parker Hannifin Corporation
Engineered Polymer Systems Division
Phone: 801 972 3000

Table 6-8. Standard, Deep and Type B PolyPak Gland Dimensions — Inch (Continued)

A	B	C		D		Compound Codes (X = Standard Offering)†						Part Number				
Rod Diameter	(Rod) Groove Diameter	(Std. PP) Groove Width	(Deep & B) Groove Width	Throat Diameter*		Standard PP		Deep PP		Type B		Com-pound Code		Energizer Code	Add to the part number for Type B or Deep only	Add to the part number for Type B only
(Bore) Groove Diameter	Bore Diameter				Piston Diameter**	Plastic	Rubber	Plastic	Rubber	Plastic	Rubber					
1.750	2.563	0.447	0.688	1.752	2.561	X						XXXX	40601750	–	625	B
1.750	2.625	0.481	0.688	1.752	2.623	X						XXXX	43701750	–	625	B
1.750	2.750	0.550	0.825	1.752	2.748			X				XXXX	50001750	–	750	B
1.750	3.000	0.688	0.963	1.753	2.997	X						XXXX	62501812	–	875	B
1.812	2.187	0.206	0.343	1.813	2.186	X						XXXX	18701812	–	312	B
1.812	2.500	0.377	0.688	1.814	2.498	X						XXXX	34301812	–	625	B
1.875	2.125	0.138	0.138	1.876	2.124	X	X			X		XXXX	12501875	–	125	B
1.875	2.125	0.138	0.275	1.876	2.124					X	X	XXXX	12501875	–	250	B
1.875	2.250	0.206	0.275	1.876	2.249				X			XXXX	18701875	–	250	B
1.875	2.250	0.206	0.308	1.876	2.249				X			XXXX	18701875	–	280	B
1.875	2.250	0.206	0.413	1.876	2.249	X	X	X	X	X	X	XXXX	18701875	–	375	B
1.875	2.375	0.275	0.413	1.876	2.374	X	X			X	X	XXXX	25001875	–	375	B
1.875	2.500	0.343	0.550	1.877	2.498	X	X	X		X	X	XXXX	31201875	–	500	B
1.875	2.625	0.413	0.688	1.877	2.623	X	X	X				XXXX	37501875	–	625	B
1.875	2.750	0.481	0.688	1.877	2.748	X						XXXX	43701875	–	625	B
1.875	2.875	0.550	0.825	1.877	2.873	X						XXXX	50001875	–	750	B
1.875	3.000	0.618	0.963	1.877	2.998			X				XXXX	56201875	–	875	B
1.875	3.125	0.688	1.100	1.878	3.122			X				XXXX	62501875	–	1000	B
1.937	2.312	0.206	0.309	1.938	2.311	X	X			X		XXXX	18701937	–	281	B
1.937	2.312	0.206	0.413	1.938	2.311			X				XXXX	18701937	–	375	B
1.937	2.437	0.275	0.413	1.938	2.436					X		XXXX	25001937	–	375	B
1.937	2.562	0.343	0.550	1.939	2.560	X						XXXX	31201937	–	500	B
2.000	2.250	0.138	0.206	2.001	2.249	X	X		X	X		XXXX	12502000	–	187	B
2.000	2.250	0.138	0.275	2.001	2.249			X				XXXX	12502000	–	250	B
2.000	2.375	0.206	0.206	2.001	2.374	X	X			X	X	XXXX	18702000	–	187	B
2.000	2.375	0.206	0.253	2.001	2.374					X		XXXX	18702000	–	230	B
2.000	2.375	0.206	0.289	2.001	2.374						X	XXXX	18702000	–	263	B
2.000	2.375	0.206	0.343	2.001	2.374					X	X	XXXX	18702000	–	312	B
2.000	2.375	0.206	0.413	2.001	2.374			X	X	X	X	XXXX	18702000	–	375	B
2.000	2.438	0.240	0.413	2.001	2.437			X				XXXX	21802000	–	375	B
2.000	2.500	0.275	0.275	2.001	2.499	X	X			X		XXXX	25002000	–	250	B
2.000	2.500	0.275	0.413	2.001	2.499			X	X	X	X	XXXX	25002000	–	375	B
2.000	2.625	0.343	0.550	2.002	2.623		X	X	X	X		XXXX	31202000	–	500	B
2.000	2.750	0.413	0.550	2.002	2.748			X				XXXX	37502000	–	500	B
2.000	2.750	0.413	0.688	2.002	2.748	X	X	X		X	X	XXXX	37502000	–	625	B
2.000	2.875	0.481	0.688	2.002	2.873	X						XXXX	43702000	–	625	B
2.000	3.000	0.550	0.825	2.002	2.998	X	X			X		XXXX	50002000	–	750	B
2.000	3.250	0.688	1.100	2.003	3.247	X						XXXX	62502000	–	1000	B
2.062	2.375	0.172	0.275	2.063	2.374	X						XXXX	15602062	–	250	B
2.062	2.437	0.206	0.413	2.063	2.436	X						XXXX	18702062	–	375	B
2.062	2.500	0.240	0.413	2.063	2.499	X						XXXX	21802062	–	375	B
2.062	2.812	0.413	0.688	2.064	2.810	X						XXXX	37502062	–	625	B

†For plastic compounds, see Table 3-1, page 3-11. For rubber compounds, see Table 3-3, page 3-14.
*If used with wear rings, refer to wear ring throat diameter, see Section 9.
**If used with wear rings, refer to wear ring piston diameter, see Section 9.
For custom groove calculations, see Appendix C.

Parker Hannifin Corporation
Engineered Polymer Systems Division
Phone: 801 972 3000

Table 6-8. Standard, Deep and Type B PolyPak Gland Dimensions — Inch (Continued)

A	B	C		D		Compound Codes (X = Standard Offering)†						Part Number				
Rod Diameter	(Rod) Groove Diameter			Throat Diameter*		Standard PP		Deep PP		Type B						
(Bore) Groove Diameter	Bore Diameter	(Std. PP) Groove Width	(Deep & B) Groove Width		Piston Diameter**	Plastic	Rubber	Plastic	Rubber	Plastic	Rubber	Com-pound Code		Energizer Code	Add to the part number for Type B or Deep only	Add to the part number for Type B only
2.125	2.375	0.138	0.275	2.126	2.374	X				X		XXXX	12502125	–	250	B
2.125	2.500	0.206	0.206	2.126	2.499	X	X			X		XXXX	18702125	–	187	B
2.125	2.500	0.206	0.275	2.126	2.499			X		X		XXXX	18702125	–	250	B
2.125	2.500	0.206	0.413	2.126	2.499				X	X	X	XXXX	18702125	–	375	B
2.125	2.625	0.275	0.275	2.126	2.624	X	X			X		XXXX	25002125	–	250	B
2.125	2.625	0.275	0.413	2.126	2.624			X	X	X	X	XXXX	25002125	–	375	B
2.125	2.750	0.343	0.550	2.127	2.748	X	X	X	X	X	X	XXXX	31202125	–	500	B
2.125	2.875	0.413	0.688	2.127	2.873	X	X	X	X			XXXX	37502125	–	625	B
2.125	3.000	0.481	0.688	2.127	2.998	X						XXXX	43702125	–	625	B
2.125	3.125	0.550	0.825	2.127	3.123	X						XXXX	50002125	–	750	B
2.187	2.562	0.206	0.413	2.188	2.561			X	X			XXXX	18702187	–	375	B
2.250	2.500	0.138	0.206	2.251	2.499	X			X			XXXX	12502250	–	187	B
2.250	2.625	0.206	0.343	2.251	2.624				X			XXXX	18702250	–	312	B
2.250	2.625	0.206	0.413	2.251	2.624	X	X	X	X	X	X	XXXX	18702250	–	375	B
2.250	2.750	0.275	0.413	2.251	2.749	X	X	X	X	X	X	XXXX	25002250	–	375	B
2.250	2.812	0.309	0.413	2.251	2.811					X		XXXX	28102250	–	375	B
2.250	2.875	0.343	0.550	2.252	2.873	X	X			X	X	XXXX	31202250	–	500	B
2.250	3.000	0.413	0.688	2.252	2.998	X	X	X		X		XXXX	37502250	–	625	B
2.250	3.125	0.481	0.413	2.252	3.123			X				XXXX	43702250	–	375	B
2.250	3.125	0.481	0.688	2.252	3.123					X		XXXX	43702250	–	625	B
2.250	3.250	0.550	0.825	2.252	3.248	X						XXXX	50002250	–	750	B
2.312	2.875	0.309	0.550	2.313	2.874	X						XXXX	28102312	–	500	B
2.312	2.937	0.343	0.550	2.314	2.935	X						XXXX	31202312	–	500	B
2.312	3.000	0.377	0.688	2.314	2.998	X						XXXX	34302312	–	625	B
2.375	2.625	0.138	0.275	2.376	2.624	X	X	X				XXXX	12502375	–	250	B
2.375	2.750	0.206	0.275	2.376	2.749				X			XXXX	18702375	–	250	B
2.375	2.750	0.206	0.293	2.376	2.749	X	X			X		XXXX	18702375	–	266	B
2.375	2.750	0.206	0.343	2.376	2.749				X			XXXX	18702375	–	312	B
2.375	2.750	0.206	0.413	2.376	2.749			X		X	X	XXXX	18702375	–	375	B
2.375	2.875	0.275	0.275	2.376	2.874	X	X			X		XXXX	25002375	–	250	B
2.375	2.875	0.275	0.413	2.376	2.874				X	X	X	XXXX	25002375	–	375	B
2.375	3.000	0.343	0.550	2.377	2.998	X	X	X	X	X		XXXX	31202375	–	500	B
2.375	3.125	0.413	0.688	2.377	3.123	X	X			X	X	XXXX	37502375	–	625	B
2.375	3.375	0.550	0.825	2.377	3.373	X						XXXX	50002375	–	750	B
2.437	3.187	0.413	0.688	2.439	3.185	X						XXXX	37502437	–	625	B
2.500	2.750	0.138	0.275	2.501	2.749	X		X	X	X		XXXX	12502500	–	250	B
2.500	2.875	0.206	0.275	2.501	2.874	X	X		X	X	X	XXXX	18702500	–	250	B
2.500	2.875	0.206	0.413	2.501	2.874			X	X	X	X	XXXX	18702500	–	375	B
2.500	2.937	0.240	0.240	2.501	2.936	X	X				X	XXXX	21802500	–	218	B
2.500	2.937	0.240	0.320	2.501	2.936						X	XXXX	21802500	–	291	B
2.500	2.937	0.240	0.413	2.501	2.936						X	XXXX	21802500	–	375	B
2.500	3.000	0.275	0.275	2.501	2.999	X	X			X		XXXX	25002500	–	250	B

†For plastic compounds, see Table 3-1, page 3-11. For rubber compounds, see Table 3-3, page 3-14.
*If used with wear rings, refer to wear ring throat diameter, see Section 9.
**If used with wear rings, refer to wear ring piston diameter, see Section 9.
For custom groove calculations, see Appendix C.

Parker Hannifin Corporation
Engineered Polymer Systems Division
Phone: 801 972 3000

Table 6-8. Standard, Deep and Type B PolyPak Gland Dimensions — Inch (Continued)

A	B	C		D		Compound Codes (X = Standard Offering)†						Part Number				
Rod Diameter	(Rod) Groove Diameter	(Std. PP) Groove Width	(Deep & B) Groove Width	Throat Diameter*		Standard PP		Deep PP		Type B		Com-pound Code		Energizer Code	Add to the part number for Type B or Deep only	Add to the part number for Type B only
(Bore) Groove Diameter	Bore Diameter				Piston Diameter**	Plastic	Rubber	Plastic	Rubber	Plastic	Rubber					
2.500	3.000	0.275	0.413	2.501	2.999			X	X	X	X	XXXX	25002500	–	375	B
2.500	3.125	0.343	0.550	2.502	3.123	X	X	X		X	X	XXXX	31202500	–	500	B
2.500	3.188	0.377	0.688	2.502	3.186	X						XXXX	34302500	–	625	B
2.500	3.250	0.413	0.688	2.502	3.248	X	X	X	X	X	X	XXXX	37502500	–	625	B
2.500	3.375	0.481	0.688	2.502	3.373	X				X		XXXX	43702500	–	625	B
2.500	3.500	0.550	0.825	2.502	3.498	X	X	X		X		XXXX	50002500	–	750	B
2.500	3.750	0.688	1.100	2.503	3.747	X						XXXX	62502500	–	1000	B
2.562	3.000	0.240	0.413	2.563	2.999	X	X					XXXX	21802562	–	375	B
2.562	3.062	0.275	0.413	2.563	3.061					X		XXXX	25002562	–	375	B
2.562	3.125	0.309	0.550	2.563	3.124	X						XXXX	28102562	–	500	B
2.562	3.187	0.343	0.550	2.564	3.185	X						XXXX	31202562	–	500	B
2.625	2.875	0.138	0.275	2.626	2.874	X						XXXX	12502625	–	250	B
2.625	3.000	0.206	0.309	2.626	2.999	X	X			X		XXXX	18702625	–	281	B
2.625	3.000	0.206	0.275	2.626	2.999				X			XXXX	18702625	–	250	B
2.625	3.000	0.206	0.343	2.626	2.999						X	XXXX	18702625	–	312	B
2.625	3.000	0.206	0.413	2.626	2.999			X	X	X		XXXX	18702625	–	375	B
2.625	3.125	0.275	0.413	2.626	3.124	X	X	X	X	X	X	XXXX	25002625	–	375	B
2.625	3.250	0.343	0.550	2.627	3.248	X	X	X	X	X	X	XXXX	31202625	–	500	B
2.625	3.375	0.413	0.688	2.627	3.373	X	X		X	X	X	XXXX	37502625	–	625	B
2.687	3.375	0.377	0.688	2.689	3.373	X						XXXX	34302687	–	625	B
2.687	3.437	0.413	0.688	2.689	3.435	X						XXXX	37502687	–	625	B
2.750	3.000	0.138	0.275	2.751	2.999	X	X			X		XXXX	12502750	–	250	B
2.750	3.125	0.206	0.206	2.751	3.124	X	X			X		XXXX	18702750	–	187	B
2.750	3.125	0.206	0.309	2.751	3.124					X		XXXX	18702750	–	281	B
2.750	3.125	0.206	0.413	2.751	3.124			X	X	X	X	XXXX	18702750	–	375	B
2.750	3.250	0.275	0.413	2.751	3.249	X	X	X	X	X	X	XXXX	25002750	–	375	B
2.750	3.375	0.343	0.550	2.752	3.373	X	X			X	X	XXXX	31202750	–	500	B
2.750	3.500	0.413	0.688	2.752	3.498	X	X	X	X	X	X	XXXX	37502750	–	625	B
2.750	3.750	0.550	0.825	2.752	3.748	X						XXXX	50002750	–	750	B
2.750	4.000	0.688	1.100	2.753	3.997	X		X		X		XXXX	62502750	–	1000	B
2.812	3.250	0.240	0.413	2.813	3.249	X	X					XXXX	21802812	–	375	B
2.812	4.062	0.688	1.100	2.815	4.059	X						XXXX	62502812	–	1000	B
2.875	3.125	0.138	0.275	2.876	3.124	X						XXXX	12502875	–	250	B
2.875	3.250	0.206	0.206	2.876	3.249	X	X				X	XXXX	18702875	–	187	B
2.875	3.250	0.206	0.275	2.876	3.249				X			XXXX	18702875	–	250	B
2.875	3.250	0.206	0.309	2.876	3.249					X		XXXX	18702875	–	281	B
2.875	3.250	0.206	0.413	2.876	3.249				X	X	X	XXXX	18702875	–	375	B
2.875	3.375	0.275	0.413	2.876	3.374	X	X		X	X	X	XXXX	25002875	–	375	B
2.875	3.500	0.343	0.550	2.877	3.498	X	X		X	X	X	XXXX	31202875	–	500	B
2.875	3.625	0.413	0.688	2.877	3.623	X	X		X	X		XXXX	37502875	–	625	B
2.875	3.750	0.481	0.688	2.877	3.748	X						XXXX	43702875	–	625	B
2.875	3.875	0.550	0.825	2.877	3.873	X						XXXX	50002875	–	750	B

†For plastic compounds, see Table 3-1, page 3-11. For rubber compounds, see Table 3-3, page 3-14.
*If used with wear rings, refer to wear ring throat diameter, see Section 9.
**If used with wear rings, refer to wear ring piston diameter, see Section 9.
For custom groove calculations, see Appendix C.

Parker Hannifin Corporation
Engineered Polymer Systems Division
Phone: 801 972 3000

Table 6-8. Standard, Deep and Type B PolyPak Gland Dimensions — Inch (Continued)

A	B	C		D		Compound Codes (X = Standard Offering)†						Part Number				
Rod Diameter	(Rod) Groove Diameter	(Std. PP) Groove Width	(Deep & B) Groove Width	Throat Diameter*		Standard PP		Deep PP		Type B		Com-pound Code		Energizer Code	Add to the part number for Type B or Deep only	Add to the part number for Type B only
(Bore) Groove Diameter	Bore Diameter				Piston Diameter**	Plastic	Rubber	Plastic	Rubber	Plastic	Rubber					
2.875	4.000	0.618	0.963	2.877	3.998			X				XXXX	56202875	–	875	B
2.875	4.125	0.688	1.100	2.878	4.122					X		XXXX	62502875	–	1000	B
3.000	3.250	0.138	0.275	3.001	3.249	X		X				XXXX	12503000	–	250	B
3.000	3.375	0.206	0.275	3.001	3.374	X	X			X		XXXX	18703000	–	250	B
3.000	3.375	0.206	0.413	3.001	3.374			X	X	X	X	XXXX	18703000	–	375	B
3.000	3.437	0.240	0.240	3.001	3.436	X	X				X	XXXX	21803000	–	218	B
3.000	3.437	0.240	0.320	3.001	3.436						X	XXXX	21803000	–	291	B
3.000	3.437	0.240	0.343	3.001	3.436						X	XXXX	21803000	–	312	B
3.000	3.500	0.275	0.275	3.001	3.499	X	X			X		XXXX	25003000	–	250	B
3.000	3.500	0.275	0.413	3.001	3.499			X	X	X	X	XXXX	25003000	–	375	B
3.000	3.625	0.343	0.550	3.002	3.623	X	X	X	X	X	X	XXXX	31203000	–	500	B
3.000	3.750	0.413	0.550	3.002	3.748	X	X			X	X	XXXX	37503000	–	500	B
3.000	3.750	0.413	0.688	3.002	3.748	X		X	X	X	X	XXXX	37503000	–	625	B
3.000	3.875	0.481	0.756	3.002	3.873	X		X				XXXX	43703000	–	687	B
3.000	4.000	0.550	0.825	3.002	3.998	X		X		X	X	XXXX	50003000	–	750	B
3.000	4.250	0.688	1.100	3.003	4.247	X						XXXX	62503000	–	1000	B
3.062	3.500	0.240	0.413	3.063	3.499	X						XXXX	21803062	–	375	B
3.125	3.500	0.206	0.206	3.126	3.499	X	X			X		XXXX	18703125	–	187	B
3.125	3.500	0.206	0.343	3.126	3.499					X		XXXX	18703125	–	312	B
3.125	3.500	0.206	0.413	3.126	3.499			X	X	X	X	XXXX	18703125	–	375	B
3.125	3.625	0.275	0.413	3.126	3.624	X	X	X		X	X	XXXX	25003125	–	375	B
3.125	3.750	0.343	0.413	3.127	3.748	X	X				X	XXXX	31203125	–	375	B
3.125	3.750	0.343	0.550	3.127	3.748				X		X	XXXX	31203125	–	500	B
3.125	3.875	0.413	0.688	3.127	3.873	X				X		XXXX	37503125	–	625	B
3.125	4.000	0.481	0.688	3.127	3.998	X						XXXX	43703125	–	625	B
3.250	3.500	0.138	0.275	3.251	3.499	X						XXXX	12503250	–	250	B
3.250	3.625	0.206	0.275	3.251	3.624				X			XXXX	18703250	–	250	B
3.250	3.625	0.206	0.413	3.251	3.624	X	X	X		X	X	XXXX	18703250	–	375	B
3.250	3.750	0.275	0.275	3.251	3.749	X	X			X		XXXX	25003250	–	250	B
3.250	3.750	0.275	0.413	3.251	3.749			X	X	X	X	XXXX	25003250	–	375	B
3.250	3.875	0.343	0.550	3.252	3.873	X	X	X	X	X	X	XXXX	31203250	–	500	B
3.250	4.000	0.413	0.550	3.252	3.998	X	X				X	XXXX	37503250	–	500	B
3.250	4.000	0.413	0.688	3.252	3.998			X	X	X	X	XXXX	37503250	–	625	B
3.250	4.125	0.481	0.688	3.252	4.123	X						XXXX	43703250	–	625	B
3.250	4.250	0.550	0.825	3.252	4.248	X				X		XXXX	50003250	–	750	B
3.250	4.500	0.688	1.100	3.253	4.497	X				X		XXXX	62503250	–	1000	B
3.375	3.750	0.206	0.206	3.376	3.749	X				X		XXXX	18703375	–	187	B
3.375	3.750	0.206	0.275	3.376	3.749		X			X		XXXX	18703375	–	250	B
3.375	3.750	0.206	0.413	3.376	3.749			X		X	X	XXXX	18703375	–	375	B
3.375	3.875	0.275	0.413	3.376	3.874	X	X	X	X	X	X	XXXX	25003375	–	375	B
3.375	4.000	0.343	0.343	3.377	3.998	X	X			X		XXXX	31203375	–	312	B
3.375	4.000	0.343	0.550	3.377	3.998			X	X	X	X	XXXX	31203375	–	500	B

†For plastic compounds, see Table 3-1, page 3-11. For rubber compounds, see Table 3-3, page 3-14.
*If used with wear rings, refer to wear ring throat diameter, see Section 9.
**If used with wear rings, refer to wear ring piston diameter, see Section 9.
For custom groove calculations, see Appendix C.

Parker Hannifin Corporation
Engineered Polymer Systems Division
Phone: 801 972 3000

Table 6-8. Standard, Deep and Type B PolyPak Gland Dimensions — Inch (Continued)

A	B	C		D		Compound Codes (X = Standard Offering)†						Part Number				
Rod Diameter	(Rod) Groove Diameter	(Std. PP) Groove Width	(Deep & B) Groove Width	Throat Diameter*		Standard PP		Deep PP		Type B		Com-pound Code		Energizer Code	Add to the part number for Type B or Deep only	Add to the part number for Type B only
(Bore) Groove Diameter	Bore Diameter				Piston Diameter**	Plastic	Rubber	Plastic	Rubber	Plastic	Rubber					
3.375	4.125	0.413	0.688	3.377	4.123	X				X		XXXX	37503375	–	625	B
3.375	4.375	0.550	0.688	3.377	4.373					X		XXXX	50003375	–	625	B
3.375	4.625	0.688	1.100	3.378	4.622	X						XXXX	62503375	–	1000	B
3.437	3.875	0.240	0.413	3.438	3.874	X						XXXX	21803437	–	375	B
3.500	3.750	0.138	0.275	3.501	3.749	X						XXXX	12503500	–	250	B
3.500	3.875	0.206	0.293	3.501	3.874	X	X			X		XXXX	18703500	–	266	B
3.500	3.875	0.206	0.309	3.501	3.874					X		XXXX	18703500	–	281	B
3.500	3.875	0.206	0.413	3.501	3.874			X	X	X	X	XXXX	18703500	–	375	B
3.500	4.000	0.275	0.275	3.501	3.999	X	X				X	XXXX	25003500	–	250	B
3.500	4.000	0.275	0.362	3.501	3.999						X	XXXX	25003500	–	329	B
3.500	4.000	0.275	0.413	3.501	3.999			X	X	X	X	XXXX	25003500	–	375	B
3.500	4.125	0.343	0.550	3.502	4.123	X	X	X		X	X	XXXX	31203500	–	500	B
3.500	4.250	0.413	0.688	3.502	4.248	X	X	X	X	X	X	XXXX	37503500	–	625	B
3.500	4.500	0.550	0.825	3.502	4.498	X	X	X		X	X	XXXX	50003500	–	750	B
3.500	4.750	0.688	1.100	3.503	4.747	X						XXXX	62503500	–	1000	B
3.500	5.000	0.825	1.375	3.503	4.997	X						XXXX	75003500	–	1250	B
3.625	3.875	0.138	0.206	3.626	3.874					X		XXXX	12503625	–	187	B
3.625	4.000	0.206	0.413	3.626	3.999	X	X	X		X	X	XXXX	18703625	–	375	B
3.625	4.125	0.275	0.413	3.626	4.124	X	X	X	X	X		XXXX	25003625	–	375	B
3.625	4.250	0.343	0.550	3.627	4.248	X	X		X	X	X	XXXX	31203625	–	500	B
3.625	4.375	0.413	0.688	3.627	4.373	X				X	X	XXXX	37503625	–	625	B
3.625	4.500	0.481	0.688	3.627	4.498	X						XXXX	43703625	–	625	B
3.625	4.625	0.550	0.825	3.627	4.623			X				XXXX	50003625	–	750	B
3.687	4.250	0.309	0.413	3.688	4.249			X				XXXX	28103687	–	375	B
3.750	4.125	0.206	0.275	3.751	4.124				X			XXXX	18703750	–	250	B
3.750	4.125	0.206	0.413	3.751	4.124	X	X	X		X	X	XXXX	18703750	–	375	B
3.750	4.250	0.275	0.413	3.751	4.249	X	X	X	X	X	X	XXXX	25003750	–	375	B
3.750	4.250	0.275	0.618	3.751	4.249					X		XXXX	25003750	–	562	B
3.750	4.375	0.343	0.413	3.752	4.373	X	X			X		XXXX	31203750	–	375	B
3.750	4.375	0.343	0.550	3.752	4.373					X	X	XXXX	31203750	–	500	B
3.750	4.375	0.343	0.688	3.752	4.373					X		XXXX	31203750	–	625	B
3.750	4.500	0.413	0.550	3.752	4.498				X			XXXX	37503750	–	500	B
3.750	4.500	0.413	0.688	3.752	4.498	X	X	X	X	X	X	XXXX	37503750	–	625	B
3.750	4.750	0.550	0.759	3.752	4.748	X	X	X		X		XXXX	50003750	–	690	B
3.750	5.000	0.688	1.100	3.753	4.997	X	X			X		XXXX	62503750	–	1000	B
3.875	4.250	0.206	0.413	3.876	4.249	X	X			X		XXXX	18703875	–	375	B
3.875	4.375	0.275	0.413	3.876	4.374	X	X	X			X	XXXX	25003875	–	375	B
3.875	4.500	0.343	0.550	3.877	4.498	X	X	X		X	X	XXXX	31203875	–	500	B
3.875	4.625	0.413	0.688	3.877	4.623	X	X			X	X	XXXX	37503875	–	625	B
3.875	4.750	0.481	0.825	3.877	4.748					X		XXXX	43703875	–	750	B
3.875	4.875	0.550	0.825	3.877	4.873					X	X	XXXX	50003875	–	750	B
3.937	4.500	0.309	0.550	3.938	4.499					X		XXXX	28103937	–	500	B

†For plastic compounds, see Table 3-1, page 3-11. For rubber compounds, see Table 3-3, page 3-14.
*If used with wear rings, refer to wear ring throat diameter, see Section 9.
**If used with wear rings, refer to wear ring piston diameter, see Section 9.
For custom groove calculations, see Appendix C.

Parker Hannifin Corporation
Engineered Polymer Systems Division
Phone: 801 972 3000

Table 6-8. Standard, Deep and Type B PolyPak Gland Dimensions — Inch (Continued)

A	B	C		D		Compound Codes (X = Standard Offering)†						Part Number				
Rod Diameter	(Rod) Groove Diameter	(Std. PP) Groove Width	(Deep & B) Groove Width	Throat Diameter*		Standard PP		Deep PP		Type B		Com-pound Code		Energizer Code	Add to the part number for Type B or Deep only	Add to the part number for Type B only
(Bore) Groove Diameter	Bore Diameter				Piston Diameter**	Plastic	Rubber	Plastic	Rubber	Plastic	Rubber					
4.000	4.250	0.138	0.275	4.001	4.249	X						XXXX	12504000	–	250	B
4.000	4.375	0.206	0.206	4.001	4.374	X	X			X		XXXX	18704000	–	187	B
4.000	4.375	0.206	0.413	4.001	4.374			X		X	X	XXXX	18704000	–	375	B
4.000	4.500	0.275	0.275	4.001	4.499	X	X				X	XXXX	25004000	–	250	B
4.000	4.500	0.275	0.413	4.001	4.499			X	X	X	X	XXXX	25004000	–	375	B
4.000	4.500	0.275	0.618	4.001	4.499			X	X	X	X	XXXX	25004000	–	562	B
4.000	4.625	0.343	0.550	4.002	4.623			X				XXXX	31204000	–	500	B
4.000	4.625	0.343	0.618	4.002	4.623	X	X	X		X	X	XXXX	31204000	–	562	B
4.000	4.750	0.413	0.550	4.002	4.748	X	X				X	XXXX	37504000	–	500	B
4.000	4.750	0.413	0.688	4.002	4.748			X	X	X	X	XXXX	37504000	–	625	B
4.000	4.875	0.481	0.688	4.002	4.873	X	X	X		X		XXXX	43704000	–	625	B
4.000	4.875	0.481	0.825	4.002	4.873						X	XXXX	43704000	–	750	B
4.000	5.000	0.550	0.825	4.002	4.998	X	X	X		X	X	XXXX	50004000	–	750	B
4.000	5.250	0.688	1.100	4.003	5.247	X						XXXX	62504000	–	1000	B
4.000	5.500	0.825	1.375	4.003	5.497	X						XXXX	75004000	–	1250	B
4.062	4.562	0.275	0.413	4.063	4.561					X		XXXX	25004062	–	375	B
4.125	4.500	0.206	0.413	4.126	4.499	X	X	X	X	X	X	XXXX	18704125	–	375	B
4.125	4.625	0.275	0.618	4.126	4.624	X	X			X	X	XXXX	25004125	–	562	B
4.125	4.750	0.343	0.618	4.127	4.748	X		X	X	X		XXXX	31204125	–	562	B
4.125	4.875	0.413	0.688	4.127	4.873	X				X	X	XXXX	37504125	–	625	B
4.125	5.125	0.550	0.825	4.127	5.123	X				X		XXXX	50004125	–	750	B
4.125	5.250	0.618	0.963	4.127	5.248	X						XXXX	56204125	–	875	B
4.250	4.500	0.138	0.275	4.251	4.499	X						XXXX	12504250	–	250	B
4.250	4.625	0.206	0.275	4.251	4.624				X			XXXX	18704250	–	250	B
4.250	4.625	0.206	0.309	4.251	4.624	X	X			X		XXXX	18704250	–	281	B
4.250	4.625	0.206	0.413	4.251	4.624			X	X	X		XXXX	18704250	–	375	B
4.250	4.750	0.275	0.413	4.251	4.749	X	X		X	X	X	XXXX	25004250	–	375	B
4.250	4.750	0.275	0.618	4.251	4.749			X	X	X	X	XXXX	25004250	–	562	B
4.250	4.875	0.343	0.618	4.252	4.873	X	X	X		X	X	XXXX	31204250	–	562	B
4.250	5.000	0.413	0.413	4.252	4.998	X	X			X		XXXX	37504250	–	375	B
4.250	5.000	0.413	0.550	4.252	4.998			X	X			XXXX	37504250	–	500	B
4.250	5.000	0.413	0.688	4.252	4.998			X	X	X	X	XXXX	37504250	–	625	B
4.250	5.250	0.550	0.825	4.252	5.248	X				X		XXXX	50004250	–	750	B
4.250	5.500	0.688	1.100	4.253	5.497	X				X		XXXX	62504250	–	1000	B
4.250	5.750	0.825	1.375	4.253	5.747	X						XXXX	75004250	–	1250	B
4.312	5.312	0.550	0.825	4.314	5.310	X						XXXX	50004312	–	750	B
4.375	4.625	0.138	0.275	4.376	4.624	X						XXXX	12504375	–	250	B
4.375	4.750	0.206	0.413	4.376	4.749	X		X		X		XXXX	18704375	–	375	B
4.375	4.875	0.275	0.618	4.376	4.874	X	X	X	X		X	XXXX	25004375	–	562	B
4.375	5.000	0.343	0.343	4.377	4.998	X	X			X		XXXX	31204375	–	312	B
4.375	5.000	0.343	0.550	4.377	4.998			X	X			XXXX	31204375	–	500	B
4.375	5.000	0.343	0.618	4.377	4.998			X		X		XXXX	31204375	–	562	B

†For plastic compounds, see Table 3-1, page 3-11. For rubber compounds, see Table 3-3, page 3-14.
*If used with wear rings, refer to wear ring throat diameter, see Section 9.
**If used with wear rings, refer to wear ring piston diameter, see Section 9.
For custom groove calculations, see Appendix C.

Parker Hannifin Corporation
Engineered Polymer Systems Division
Phone: 801 972 3000

Table 6-8. Standard, Deep and Type B PolyPak Gland Dimensions — Inch (Continued)

A	B	C		D		Compound Codes (X = Standard Offering)†						Part Number				
Rod Diameter	(Rod) Groove Diameter	(Std. PP) Groove Width	(Deep & B) Groove Width	Throat Diameter*		Standard PP		Deep PP		Type B		Com-pound Code		Energizer Code	Add to the part number for Type B or Deep only	Add to the part number for Type B only
(Bore) Groove Diameter	Bore Diameter				Piston Diameter**	Plastic	Rubber	Plastic	Rubber	Plastic	Rubber					
4.375	5.125	0.413	0.688	4.377	5.123	X	X	X		X	X	XXXX	37504375	–	625	B
4.375	5.375	0.550	0.688	4.377	5.373	X				X		XXXX	50004375	–	625	B
4.375	5.375	0.550	0.825	4.377	5.373			X		X		XXXX	50004375	–	750	B
4.397	5.147	0.413	0.688	4.399	5.145					X		XXXX	37504397	–	625	B
4.416	4.916	0.275	0.618	4.417	4.915					X		XXXX	25004416	–	562	B
4.437	4.937	0.275	0.413	4.438	4.936					X		XXXX	25004437	–	375	B
4.437	5.000	0.309	0.550	4.438	4.999	X						XXXX	28104437	–	500	B
4.500	4.750	0.138	0.206	4.501	4.749	X				X		XXXX	12504500	–	187	B
4.500	4.875	0.206	0.206	4.501	4.874	X				X		XXXX	18704500	–	187	B
4.500	4.875	0.206	0.413	4.501	4.874			X		X	X	XXXX	18704500	–	375	B
4.500	5.000	0.275	0.275	4.501	4.999	X	X			X	X	XXXX	25004500	–	250	B
4.500	5.000	0.275	0.413	4.501	4.999				X	X	X	XXXX	25004500	–	375	B
4.500	5.000	0.275	0.550	4.501	4.999					X	X	XXXX	25004500	–	500	B
4.500	5.000	0.275	0.618	4.501	4.999			X	X	X	X	XXXX	25004500	–	562	B
4.500	5.125	0.343	0.618	4.502	5.123	X	X			X		XXXX	31204500	–	562	B
4.500	5.125	0.343	0.688	4.502	5.123				X	X		XXXX	31204500	–	625	B
4.500	5.250	0.413	0.688	4.502	5.248	X	X	X	X	X	X	XXXX	37504500	–	625	B
4.500	5.375	0.481	0.825	4.502	5.373	X				X	X	XXXX	43704500	–	750	B
4.500	5.500	0.550	0.825	4.502	5.498	X	X	X		X	X	XXXX	50004500	–	750	B
4.500	5.750	0.688	1.100	4.503	5.747	X						XXXX	62504500	–	1000	B
4.500	6.000	0.825	1.375	4.503	5.997	X						XXXX	75004500	–	1250	B
4.625	5.000	0.206	0.413	4.626	4.999	X		X				XXXX	18704625	–	375	B
4.625	5.125	0.275	0.618	4.626	5.124	X	X			X	X	XXXX	25004625	–	562	B
4.625	5.250	0.343	0.688	4.627	5.248			X	X	X		XXXX	31204625	–	625	B
4.625	5.375	0.413	0.688	4.627	5.373	X				X	X	XXXX	37504625	–	625	B
4.625	5.875	0.688	1.100	4.628	5.872	X						XXXX	62504625	–	1000	B
4.687	5.250	0.309	0.688	4.688	5.249					X		XXXX	28104687	–	625	B
4.750	5.000	0.138	0.275	4.751	4.999	X						XXXX	12504750	–	250	B
4.750	5.125	0.206	0.413	4.751	5.124	X						XXXX	18704750	–	375	B
4.750	5.250	0.275	0.413	4.751	5.249	X	X			X		XXXX	25004750	–	375	B
4.750	5.250	0.275	0.618	4.751	5.249			X	X	X	X	XXXX	25004750	–	562	B
4.750	5.375	0.343	0.688	4.752	5.373	X			X	X		XXXX	31204750	–	625	B
4.750	5.500	0.413	0.550	4.752	5.498			X				XXXX	37504750	–	500	B
4.750	5.500	0.413	0.688	4.752	5.498	X	X	X	X	X	X	XXXX	37504750	–	625	B
4.750	5.625	0.481	0.688	4.752	5.623			X	X			XXXX	43704750	–	625	B
4.750	5.625	0.481	0.825	4.752	5.623	X	X			X		XXXX	43704750	–	750	B
4.750	5.750	0.550	0.756	4.752	5.748			X				XXXX	50004750	–	687	B
4.750	5.750	0.550	0.825	4.752	5.748	X				X		XXXX	50004750	–	750	B
4.750	6.000	0.688	1.100	4.753	5.997	X		X				XXXX	62504750	–	1000	B
4.750	6.250	0.825	1.375	4.753	6.247			X				XXXX	75004750	–	1250	B
4.875	5.250	0.206	0.413	4.876	5.249	X						XXXX	18704875	–	375	B
4.875	5.250	0.206	0.618	4.876	5.249			X				XXXX	18704875	–	562	B

†For plastic compounds, see Table 3-1, page 3-11. For rubber compounds, see Table 3-3, page 3-14.
*If used with wear rings, refer to wear ring throat diameter, see Section 9.
**If used with wear rings, refer to wear ring piston diameter, see Section 9.
For custom groove calculations, see Appendix C.

Parker Hannifin Corporation
Engineered Polymer Systems Division
Phone: 801 972 3000

Table 6-8. Standard, Deep and Type B PolyPak Gland Dimensions — Inch (Continued)

A	B	C		D		Compound Codes (X = Standard Offering)†						Part Number				
Rod Diameter	(Rod) Groove Diameter			Throat Diameter*		Standard PP		Deep PP		Type B						
(Bore) Groove Diameter	Bore Diameter	(Std. PP) Groove Width	(Deep & B) Groove Width		Piston Diameter**	Plastic	Rubber	Plastic	Rubber	Plastic	Rubber	Com-pound Code		Energizer Code	Add to the part number for Type B or Deep only	Add to the part number for Type B only
4.875	5.375	0.275	0.413	4.876	5.374	X	X			X	X	XXXX	25004875	–	375	B
4.875	5.375	0.275	0.618	4.876	5.374			X	X	X	X	XXXX	25004875	–	562	B
4.875	5.500	0.343	0.343	4.877	5.498	X					X	XXXX	31204875	–	312	B
4.875	5.500	0.343	0.688	4.877	5.498						X	XXXX	31204875	–	625	B
4.875	5.625	0.413	0.688	4.877	5.623	X				X	X	XXXX	37504875	–	625	B
4.875	5.750	0.481	0.618	4.877	5.748					X		XXXX	43704875	–	562	B
4.875	5.875	0.550	0.618	4.877	5.873			X				XXXX	50004875	–	562	B
4.937	5.500	0.309	0.377	4.938	5.499					X		XXXX	28104937	–	343	B
4.937	5.500	0.309	0.550	4.938	5.499					X		XXXX	28104937	–	500	B
5.000	5.250	0.138	0.275	5.001	5.249	X						XXXX	12505000	–	250	B
5.000	5.375	0.206	0.309	5.001	5.374					X		XXXX	18705000	–	281	B
5.000	5.375	0.206	0.413	5.001	5.374			X			X	XXXX	18705000	–	375	B
5.000	5.500	0.275	0.413	5.001	5.499	X	X	X	X	X	X	XXXX	25005000	–	375	B
5.000	5.500	0.275	0.618	5.001	5.499			X	X	X	X	XXXX	25005000	–	562	B
5.000	5.562	0.309	0.381	5.001	5.561	X	X				X	XXXX	28105000	–	346	B
5.000	5.625	0.343	0.688	5.002	5.623	X	X			X	X	XXXX	31205000	–	625	B
5.000	5.750	0.413	0.413	5.002	5.748	X	X				X	XXXX	37505000	–	375	B
5.000	5.750	0.413	0.550	5.002	5.748					X		XXXX	37505000	–	500	B
5.000	5.750	0.413	0.688	5.002	5.748	X		X	X	X	X	XXXX	37505000	–	625	B
5.000	5.875	0.481	0.825	5.002	5.873					X	X	XXXX	43705000	–	750	B
5.000	6.000	0.550	0.825	5.002	5.998	X	X		X	X	X	XXXX	50005000	–	750	B
5.000	6.250	0.688	1.100	5.003	6.247	X				X		XXXX	62505000	–	1000	B
5.000	6.500	0.825	1.375	5.003	6.497	X						XXXX	75005000	–	1250	B
5.000	7.000	1.100	1.650	5.004	6.996			X				XXXX	100005000	–	1500	B
5.125	5.625	0.275	0.618	5.126	5.624	X	X		X			XXXX	25005125	–	562	B
5.125	5.750	0.343	0.688	5.127	5.748	X	X	X		X		XXXX	31205125	–	625	B
5.125	5.875	0.413	0.688	5.127	5.873	X				X		XXXX	37505125	–	625	B
5.125	6.000	0.481	0.550	5.127	5.998	X		X				XXXX	43705125	–	500	B
5.125	6.125	0.550	0.825	5.127	6.123	X		X				XXXX	50005125	–	750	B
5.250	5.625	0.206	0.413	5.251	5.624	X						XXXX	18705250	–	375	B
5.250	5.750	0.275	0.413	5.251	5.749	X	X	X		X		XXXX	25005250	–	375	B
5.250	5.750	0.275	0.618	5.251	5.749			X	X	X		XXXX	25005250	–	562	B
5.250	5.875	0.343	0.550	5.252	5.873	X	X				X	XXXX	31205250	–	500	B
5.250	5.875	0.343	0.688	5.252	5.873					X		XXXX	31205250	–	625	B
5.250	6.000	0.413	0.413	5.252	5.998	X	X			X		XXXX	37505250	–	375	B
5.250	6.000	0.413	0.550	5.252	5.998			X		X		XXXX	37505250	–	500	B
5.250	6.000	0.413	0.688	5.252	5.998			X	X	X	X	XXXX	37505250	–	625	B
5.250	6.250	0.550	0.550	5.252	6.248	X				X		XXXX	50005250	–	500	B
5.250	6.250	0.550	0.825	5.252	6.248					X		XXXX	50005250	–	750	B
5.250	6.500	0.688	1.100	5.253	6.497					X		XXXX	62505250	–	1000	B
5.375	5.875	0.275	0.413	5.376	5.874	X	X			X	X	XXXX	25005375	–	375	B
5.375	5.875	0.275	0.618	5.376	5.874					X		XXXX	25005375	–	562	B

†For plastic compounds, see Table 3-1, page 3-11. For rubber compounds, see Table 3-3, page 3-14.
*If used with wear rings, refer to wear ring throat diameter, see Section 9.
**If used with wear rings, refer to wear ring piston diameter, see Section 9.
For custom groove calculations, see Appendix C.

Parker Hannifin Corporation
Engineered Polymer Systems Division
Phone: 801 972 3000

Table 6-8. Standard, Deep and Type B PolyPak Gland Dimensions — Inch (Continued)

A	B	C		D		Compound Codes (X = Standard Offering)†						Part Number				
Rod Diameter	(Rod) Groove Diameter	(Std. PP) Groove Width	(Deep & B) Groove Width	Throat Diameter*		Standard PP		Deep PP		Type B		Com-pound Code		Energizer Code	Add to the part number for Type B or Deep only	Add to the part number for Type B only
(Bore) Groove Diameter	Bore Diameter				Piston Diameter**	Plastic	Rubber	Plastic	Rubber	Plastic	Rubber					
5.375	6.000	0.343	0.688	5.377	5.998	X	X	X			X	XXXX	31205375	–	625	B
5.375	6.125	0.413	0.688	5.377	6.123	X				X	X	XXXX	37505375	–	625	B
5.375	6.375	0.550	0.825	5.377	6.373	X		X				XXXX	50005375	–	750	B
5.437	6.000	0.309	0.550	5.438	5.999	X	X					XXXX	28105437	–	500	B
5.437	6.437	0.550	0.825	5.439	6.435	X						XXXX	50005437	–	750	B
5.500	5.875	0.206	0.413	5.501	5.874					X		XXXX	18705500	–	375	B
5.500	6.000	0.275	0.413	5.501	5.999	X	X	X	X	X	X	XXXX	25005500	–	375	B
5.500	6.000	0.275	0.618	5.501	5.999			X		X	X	XXXX	25005500	–	562	B
5.500	6.125	0.343	0.343	5.502	6.123	X	X				X	XXXX	31205500	–	312	B
5.500	6.125	0.343	0.413	5.502	6.123						X	XXXX	31205500	–	374	B
5.500	6.125	0.343	0.550	5.502	6.123						X	XXXX	31205500	–	500	B
5.500	6.125	0.343	0.688	5.502	6.123			X		X		XXXX	31205500	–	625	B
5.500	6.250	0.413	0.688	5.502	6.248	X	X	X	X	X	X	XXXX	37505500	–	625	B
5.500	6.375	0.481	0.825	5.502	6.373	X						XXXX	43705500	–	750	B
5.500	6.500	0.550	0.825	5.502	6.498	X	X	X	X	X	X	XXXX	50005500	–	750	B
5.500	6.625	0.618	0.963	5.502	6.623	X						XXXX	56205500	–	875	B
5.500	6.750	0.688	1.100	5.503	6.747	X		X		X		XXXX	62505500	–	1000	B
5.500	7.000	0.825	1.375	5.503	6.997	X						XXXX	75005500	–	1250	B
5.625	6.125	0.275	0.618	5.626	6.124	X	X			X	X	XXXX	25005625	–	562	B
5.625	6.250	0.343	0.688	5.627	6.248				X	X		XXXX	31205625	–	625	B
5.625	6.375	0.413	0.688	5.627	6.373	X	X	X		X	X	XXXX	37505625	–	625	B
5.687	6.062	0.206	0.413	5.688	6.061	X						XXXX	18705687	–	375	B
5.750	6.000	0.138	0.275	5.751	5.999	X						XXXX	12505750	–	250	B
5.750	6.250	0.275	0.413	5.751	6.249	X	X				X	XXXX	25005750	–	375	B
5.750	6.250	0.275	0.618	5.751	6.249			X	X	X	X	XXXX	25005750	–	562	B
5.750	6.375	0.343	0.688	5.752	6.373					X		XXXX	31205750	–	625	B
5.750	6.500	0.413	0.550	5.752	6.498			X				XXXX	37505750	–	500	B
5.750	6.500	0.413	0.688	5.752	6.498	X		X		X	X	XXXX	37505750	–	625	B
5.750	6.750	0.550	0.825	5.752	6.748	X				X	X	XXXX	50005750	–	750	B
5.750	7.000	0.688	1.100	5.753	6.997	X	X					XXXX	62505750	–	1000	B
5.812	6.312	0.275	0.413	5.813	6.311				X			XXXX	25005812	–	375	B
5.875	6.250	0.206	0.413	5.876	6.249	X						XXXX	18705875	–	375	B
5.875	6.375	0.275	0.413	5.876	6.374	X					X	XXXX	25005875	–	375	B
5.875	6.375	0.275	0.618	5.876	6.374			X				XXXX	25005875	–	562	B
5.875	6.500	0.343	0.343	5.877	6.498	X					X	XXXX	31205875	–	312	B
5.875	6.500	0.343	0.688	5.877	6.498						X	XXXX	31205875	–	625	B
5.875	6.625	0.413	0.688	5.877	6.623	X	X			X		XXXX	37505875	–	625	B
5.937	6.500	0.309	0.550	5.938	6.499					X		XXXX	28105937	–	500	B
6.000	6.375	0.206	0.413	6.001	6.374	X		X				XXXX	18706000	–	375	B
6.000	6.500	0.275	0.413	6.001	6.499	X	X			X	X	XXXX	25006000	–	375	B
6.000	6.500	0.275	0.481	6.001	6.499					X		XXXX	25006000	–	437	B
6.000	6.500	0.275	0.618	6.001	6.499			X	X	X	X	XXXX	25006000	–	562	B

†For plastic compounds, see Table 3-1, page 3-11. For rubber compounds, see Table 3-3, page 3-14.
*If used with wear rings, refer to wear ring throat diameter, see Section 9.
**If used with wear rings, refer to wear ring piston diameter, see Section 9.
For custom groove calculations, see Appendix C.

Table 6-8. Standard, Deep and Type B PolyPak Gland Dimensions — Inch (Continued)

A	B	C		D		Compound Codes (X = Standard Offering)†						Part Number				
Rod Diameter	(Rod) Groove Diameter	(Std. PP) Groove Width	(Deep & B) Groove Width	Throat Diameter*		Standard PP		Deep PP		Type B		Com-pound Code		Energizer Code	Add to the part number for Type B or Deep only	Add to the part number for Type B only
(Bore) Groove Diameter	Bore Diameter				Piston Diameter**	Plastic	Rubber	Plastic	Rubber	Plastic	Rubber					
6.000	6.625	0.343	0.688	6.002	6.623	X				X		XXXX	31206000	–	625	B
6.000	6.750	0.413	0.550	6.002	6.748	X	X			X		XXXX	37506000	–	500	B
6.000	6.750	0.413	0.688	6.002	6.748			X	X	X	X	XXXX	37506000	–	625	B
6.000	7.000	0.550	0.825	6.002	6.998		X	X	X	X	X	XXXX	50006000	–	750	B
6.000	7.250	0.688	1.100	6.003	7.247	X				X		XXXX	62506000	–	1000	B
6.000	7.500	0.825	1.375	6.003	7.497	X						XXXX	75006000	–	1250	B
6.000	8.000	1.100	1.650	6.004	7.996	X						XXXX	100006000	–	1500	B
6.125	6.625	0.275	0.413	6.126	6.624	X						XXXX	25006125	–	375	B
6.125	6.750	0.343	0.688	6.127	6.748	X					X	XXXX	31206125	–	625	B
6.250	6.750	0.275	0.413	6.251	6.749	X	X				X	XXXX	25006250	–	375	B
6.250	6.750	0.275	0.618	6.251	6.749			X		X	X	XXXX	25006250	–	562	B
6.250	7.000	0.413	0.550	6.252	6.998	X	X	X		X		XXXX	37506250	–	500	B
6.250	7.000	0.413	0.688	6.252	6.998			X	X	X	X	XXXX	37506250	–	625	B
6.250	7.250	0.550	0.825	6.252	7.248	X	X			X	X	XXXX	50006250	–	750	B
6.250	7.500	0.688	1.100	6.253	7.497	X						XXXX	62506250	–	1000	B
6.250	7.750	0.825	1.375	6.253	7.747			X				XXXX	75006250	–	1250	B
6.312	6.687	0.206	0.413	6.313	6.686	X						XXXX	18706312	–	375	B
6.375	7.000	0.343	0.688	6.377	6.998	X	X	X		X	X	XXXX	31206375	–	625	B
6.375	7.375	0.550	0.825	6.377	7.373	X						XXXX	50006375	–	750	B
6.437	7.000	0.309	0.550	6.438	6.999	X	X					XXXX	28106437	–	500	B
6.500	7.000	0.275	0.413	6.501	6.999	X	X	X	X	X		XXXX	25006500	–	375	B
6.500	7.000	0.275	0.618	6.501	6.999			X	X	X	X	XXXX	25006500	–	562	B
6.500	7.125	0.343	0.688	6.502	7.123	X				X		XXXX	31206500	–	625	B
6.500	7.250	0.413	0.413	6.502	7.248	X	X				X	XXXX	37506500	–	375	B
6.500	7.250	0.413	0.550	6.502	7.248			X		X		XXXX	37506500	–	500	B
6.500	7.250	0.413	0.688	6.502	7.248			X		X	X	XXXX	37506500	–	625	B
6.500	7.500	0.550	0.825	6.502	7.498	X		X	X	X		XXXX	50006500	–	750	B
6.500	7.750	0.688	1.100	6.503	7.747	X		X				XXXX	62506500	–	1000	B
6.500	8.000	0.825	1.375	6.503	7.997	X		X				XXXX	75006500	–	1250	B
6.625	7.125	0.275	0.413	6.626	7.124			X	X			XXXX	25006625	–	375	B
6.625	7.250	0.343	0.688	6.627	7.248	X				X		XXXX	31206625	–	625	B
6.625	7.875	0.688	1.100	6.628	7.872	X						XXXX	62506625	–	1000	B
6.750	7.250	0.275	0.413	6.751	7.249	X	X			X	X	XXXX	25006750	–	375	B
6.750	7.250	0.275	0.618	6.751	7.249			X		X	X	XXXX	25006750	–	562	B
6.750	7.375	0.343	0.688	6.752	7.373	X				X		XXXX	31206750	–	625	B
6.750	7.500	0.413	0.413	6.752	7.498	X	X			X		XXXX	37506750	–	375	B
6.750	7.500	0.413	0.550	6.752	7.498					X		XXXX	37506750	–	500	B
6.750	7.500	0.413	0.618	6.752	7.498			X				XXXX	37506750	–	562	B
6.750	7.500	0.413	0.688	6.752	7.498			X		X	X	XXXX	37506750	–	625	B
6.750	7.750	0.550	0.825	6.752	7.748	X			X	X		XXXX	50006750	–	750	B
6.750	7.875	0.618	0.963	6.752	7.873	X						XXXX	56206750	–	875	B
6.750	8.000	0.688	1.100	6.753	7.997	X		X		X		XXXX	62506750	–	1000	B

†For plastic compounds, see Table 3-1, page 3-11. For rubber compounds, see Table 3-3, page 3-14.
*If used with wear rings, refer to wear ring throat diameter, see Section 9.
**If used with wear rings, refer to wear ring piston diameter, see Section 9.
For custom groove calculations, see Appendix C.

Parker Hannifin Corporation
Engineered Polymer Systems Division
Phone: 801 972 3000

Table 6-8. Standard, Deep and Type B PolyPak Gland Dimensions — Inch (Continued)

A	B	C		D		Compound Codes (X = Standard Offering)†						Part Number				
Rod Diameter	(Rod) Groove Diameter	(Std. PP) Groove Width	(Deep & B) Groove Width	Throat Diameter*		Standard PP		Deep PP		Type B		Com-pound Code		Energizer Code	Add to the part number for Type B or Deep only	Add to the part number for Type B only
(Bore) Groove Diameter	Bore Diameter				Piston Diameter**	Plastic	Rubber	Plastic	Rubber	Plastic	Rubber					
6.875	7.625	0.413	0.688	6.877	7.623					X		XXXX	37506875	–	625	B
6.875	8.125	0.688	1.100	6.878	8.122	X						XXXX	62506875	–	1000	B
6.937	7.500	0.309	0.550	6.938	7.499					X		XXXX	28106937	–	500	B
7.000	7.375	0.206	0.413	7.001	7.374					X		XXXX	18707000	–	375	B
7.000	7.500	0.275	0.413	7.001	7.499	X	X	X		X	X	XXXX	25007000	–	375	B
7.000	7.500	0.275	0.618	7.001	7.499			X	X	X	X	XXXX	25007000	–	562	B
7.000	7.625	0.343	0.688	7.002	7.623	X				X		XXXX	31207000	–	625	B
7.000	7.750	0.413	0.550	7.002	7.748	X	X			X		XXXX	37507000	–	500	B
7.000	7.750	0.413	0.688	7.002	7.748			X		X	X	XXXX	37507000	–	625	B
7.000	8.000	0.550	0.825	7.002	7.998	X	X	X	X	X	X	XXXX	50007000	–	750	B
7.000	8.250	0.688	1.100	7.003	8.247	X				X		XXXX	62507000	–	1000	B
7.000	8.500	0.825	1.375	7.003	8.497	X	X	X				XXXX	75007000	–	1250	B
7.000	9.000	1.100	1.650	7.004	8.996	X						XXXX	100007000	–	1500	B
7.125	7.625	0.275	0.413	7.126	7.624	X			X			XXXX	25007125	–	375	B
7.187	8.000	0.447	0.688	7.189	7.998	X						XXXX	40607187	–	625	B
7.250	7.750	0.275	0.618	7.251	7.749	X	X			X	X	XXXX	25007250	–	562	B
7.250	7.875	0.343	0.688	7.252	7.873	X				X		XXXX	31207250	–	625	B
7.250	8.000	0.413	0.688	7.252	7.998	X	X	X	X	X	X	XXXX	37507250	–	625	B
7.250	8.250	0.550	0.825	7.252	8.248				X	X	X	XXXX	50007250	–	750	B
7.250	8.500	0.688	1.100	7.253	8.497					X		XXXX	62507250	–	1000	B
7.375	7.750	0.206	0.413	7.376	7.749		X					XXXX	18707375	–	375	B
7.375	8.000	0.343	0.688	7.377	7.998	X	X					XXXX	31207375	–	625	B
7.375	8.125	0.413	0.550	7.377	8.123					X		XXXX	37507375	–	500	B
7.404	8.028	0.343	0.688	7.406	8.026					X		XXXX	31207404	–	625	B
7.500	7.875	0.206	0.275	7.501	7.874			X				XXXX	18707500	–	250	B
7.500	8.000	0.275	0.618	7.501	7.999	X	X	X	X	X	X	XXXX	25007500	–	562	B
7.500	8.125	0.343	0.688	7.502	8.123	X		X				XXXX	31207500	–	625	B
7.500	8.250	0.413	0.550	7.502	8.248	X	X	X		X		XXXX	37507500	–	500	B
7.500	8.250	0.413	0.688	7.502	8.248	X		X	X	X	X	XXXX	37507500	–	625	B
7.500	8.500	0.550	0.825	7.502	8.498	X		X		X		XXXX	50007500	–	750	B
7.500	8.750	0.688	1.100	7.503	8.747					X		XXXX	62507500	–	1000	B
7.500	9.000	0.825	1.375	7.503	8.997	X		X				XXXX	75007500	–	1250	B
7.500	9.500	1.100	1.650	7.504	9.496	X						XXXX	100007500	–	1500	B
7.625	8.250	0.343	0.550	7.627	8.248			X				XXXX	31207625	–	500	B
7.625	8.375	0.413	0.688	7.627	8.373	X						XXXX	37507625	–	625	B
7.750	8.250	0.275	0.618	7.751	8.249	X	X	X		X		XXXX	25007750	–	562	B
7.750	8.375	0.343	0.688	7.752	8.373	X						XXXX	31207750	–	625	B
7.750	8.500	0.413	0.550	7.752	8.498	X	X	X		X		XXXX	37507750	–	500	B
7.750	8.500	0.413	0.688	7.752	8.498			X	X	X	X	XXXX	37507750	–	625	B
7.750	8.750	0.550	0.825	7.752	8.748	X				X		XXXX	50007750	–	750	B
7.750	9.000	0.688	1.100	7.753	8.997	X				X		XXXX	62507750	–	1000	B
7.790	8.540	0.413	0.413	7.792	8.538					X		XXXX	37507790	–	375	B

†For plastic compounds, see Table 3-1, page 3-11. For rubber compounds, see Table 3-3, page 3-14.
*If used with wear rings, refer to wear ring throat diameter, see Section 9.
**If used with wear rings, refer to wear ring piston diameter, see Section 9.
For custom groove calculations, see Appendix C.

Parker Hannifin Corporation
Engineered Polymer Systems Division
Phone: 801 972 3000

Table 6-8. Standard, Deep and Type B PolyPak Gland Dimensions — Inch (Continued)

A	B	C		D		Compound Codes (X = Standard Offering)†						Part Number				
Rod Diameter	(Rod) Groove Diameter	(Std. PP) Groove Width	(Deep & B) Groove Width	Throat Diameter*		Standard PP		Deep PP		Type B		Com-pound Code		Energizer Code	Add to the part number for Type B or Deep only	Add to the part number for Type B only
(Bore) Groove Diameter	Bore Diameter				Piston Diameter**	Plastic	Rubber	Plastic	Rubber	Plastic	Rubber					
7.875	8.500	0.343	0.688	7.877	8.498	X				X		XXXX	31207875	–	625	B
7.875	8.625	0.413	0.688	7.877	8.623						X	XXXX	37507875	–	625	B
7.875	8.875	0.550	0.825	7.877	8.873					X		XXXX	50007875	–	750	B
8.000	8.500	0.275	0.618	8.001	8.499	X	X			X	X	XXXX	25008000	–	562	B
8.000	8.625	0.343	0.688	8.002	8.623	X	X			X		XXXX	31208000	–	625	B
8.000	8.750	0.413	0.550	8.002	8.748			X				XXXX	37508000	–	500	B
8.000	8.750	0.413	0.688	8.002	8.748	X	X	X		X	X	XXXX	37508000	–	625	B
8.000	9.000	0.550	0.825	8.002	8.998	X		X	X	X	X	XXXX	50008000	–	750	B
8.000	9.250	0.688	1.100	8.003	9.247	X		X				XXXX	62508000	–	1000	B
8.000	9.500	0.825	1.238	8.003	9.497	X				X		XXXX	75008000	–	1125	B
8.000	9.500	0.825	1.375	8.003	9.497					X		XXXX	75008000	–	1250	B
8.000	10.000	1.100	1.650	8.004	9.996	X						XXXX	100008000	–	1500	B
8.125	8.625	0.275	0.618	8.126	8.624					X		XXXX	25008125	–	562	B
8.187	9.437	0.688	1.100	8.190	9.434	X						XXXX	62508187	–	1000	B
8.250	8.750	0.275	0.413	8.251	8.749	X	X			X		XXXX	25008250	–	375	B
8.250	8.750	0.275	0.618	8.251	8.749					X	X	XXXX	25008250	–	562	B
8.250	9.000	0.413	0.688	8.252	8.998	X	X	X	X	X	X	XXXX	37508250	–	625	B
8.250	9.250	0.550	0.825	8.252	9.248	X		X		X		XXXX	50008250	–	750	B
8.250	9.500	0.688	1.100	8.253	9.497	X				X		XXXX	62508250	–	1000	B
8.250	9.750	0.825	1.375	8.253	9.747	X						XXXX	75008250	–	1250	B
8.375	9.000	0.343	0.688	8.377	8.998	X		X				XXXX	31208375	–	625	B
8.375	9.875	0.825	1.375	8.378	9.872	X						XXXX	75008375	–	1250	B
8.500	9.000	0.275	0.618	8.501	8.999	X	X	X		X	X	XXXX	25008500	–	562	B
8.500	9.125	0.343	0.688	8.502	9.123	X						XXXX	31208500	–	625	B
8.500	9.250	0.413	0.688	8.502	9.248	X	X			X	X	XXXX	37508500	–	625	B
8.500	9.500	0.550	0.825	8.502	9.498	X	X	X		X	X	XXXX	50008500	–	750	B
8.500	9.750	0.688	1.100	8.503	9.747	X				X		XXXX	62508500	–	1000	B
8.500	10.000	0.825	1.238	8.503	9.997	X	X			X		XXXX	75008500	–	1125	B
8.500	10.000	0.825	1.375	8.503	9.997			X				XXXX	75008500	–	1250	B
8.500	10.250	0.963	1.513	8.504	10.246	X						XXXX	87508500	–	1375	B
8.625	9.375	0.413	0.688	8.627	9.373	X						XXXX	37508625	–	625	B
8.625	9.875	0.688	1.100	8.628	9.872	X						XXXX	62508625	–	1000	B
8.750	9.250	0.275	0.618	8.751	9.249	X	X	X				XXXX	25008750	–	562	B
8.750	9.500	0.413	0.413	8.752	9.498	X	X				X	XXXX	37508750	–	375	B
8.750	9.500	0.413	0.550	8.752	9.498	X				X		XXXX	37508750	–	500	B
8.750	9.500	0.413	0.688	8.752	9.498			X	X			XXXX	37508750	–	625	B
8.750	9.500	0.413	0.825	8.752	9.498			X		X		XXXX	37508750	–	750	B
8.750	9.750	0.550	0.825	8.752	9.748	X		X		X		XXXX	50008750	–	750	B
8.750	10.000	0.688	1.100	8.753	9.997	X		X				XXXX	62508750	–	1000	B
8.795	9.545	0.413	0.413	8.797	9.543					X		XXXX	37508795	–	375	B
8.875	9.500	0.343	0.688	8.877	9.498	X						XXXX	31208875	–	625	B
8.875	9.625	0.413	0.688	8.877	9.623					X	X	XXXX	37508875	–	625	B

†For plastic compounds, see Table 3-1, page 3-11. For rubber compounds, see Table 3-3, page 3-14.
*If used with wear rings, refer to wear ring throat diameter, see Section 9.
**If used with wear rings, refer to wear ring piston diameter, see Section 9.
For custom groove calculations, see Appendix C.

Parker Hannifin Corporation
Engineered Polymer Systems Division
Phone: 801 972 3000

Table 6-8. Standard, Deep and Type B PolyPak Gland Dimensions — Inch (Continued)

A	B	C		D		Compound Codes (X = Standard Offering)†						Part Number				
Rod Diameter	(Rod) Groove Diameter	(Std. PP) Groove Width	(Deep & B) Groove Width	Throat Diameter*		Standard PP		Deep PP		Type B		Com-pound Code		Energizer Code	Add to the part number for Type B or Deep only	Add to the part number for Type B only
(Bore) Groove Diameter	Bore Diameter				Piston Diameter**	Plastic	Rubber	Plastic	Rubber	Plastic	Rubber					
8.937	9.500	0.309	0.550	8.938	9.499					X		XXXX	28108937	–	500	B
9.000	9.500	0.275	0.413	9.001	9.499	X	X	X		X		XXXX	25009000	–	375	B
9.000	9.625	0.343	0.550	9.002	9.623			X				XXXX	31209000	–	500	B
9.000	9.750	0.413	0.688	9.002	9.748	X	X	X		X	X	XXXX	37509000	–	625	B
9.000	10.000	0.550	0.825	9.002	9.998	X	X	X	X	X	X	XXXX	50009000	–	750	B
9.000	10.250	0.688	1.100	9.003	10.247	X				X		XXXX	62509000	–	1000	B
9.000	10.500	0.825	1.375	9.003	10.497	X		X				XXXX	75009000	–	1250	B
9.125	9.750	0.343	0.688	9.127	9.748					X		XXXX	31209125	–	625	B
9.250	9.750	0.275	0.618	9.251	9.749	X	X	X				XXXX	25009250	–	562	B
9.250	9.875	0.343	0.688	9.252	9.873					X		XXXX	31209250	–	625	B
9.250	10.000	0.413	0.550	9.252	9.998			X				XXXX	37509250	–	500	B
9.250	10.000	0.413	0.688	9.252	9.998	X	X	X	X	X		XXXX	37509250	–	625	B
9.250	10.250	0.550	0.825	9.252	10.248					X		XXXX	50009250	–	750	B
9.250	10.500	0.688	1.100	9.253	10.497	X						XXXX	62509250	–	1000	B
9.312	10.000	0.377	0.688	9.314	9.998	X	X					XXXX	34309312	–	625	B
9.375	10.000	0.343	0.688	9.377	9.998					X		XXXX	31209375	–	625	B
9.500	10.000	0.275	0.413	9.501	9.999			X				XXXX	25009500	–	375	B
9.500	10.000	0.275	0.618	9.501	9.999		X	X	X	X		XXXX	25009500	–	562	B
9.500	10.125	0.343	0.688	9.502	10.123	X						XXXX	31209500	–	625	B
9.500	10.250	0.413	0.688	9.502	10.248	X				X	X	XXXX	37509500	–	625	B
9.500	10.500	0.550	0.825	9.502	10.498	X	X	X		X		XXXX	50009500	–	750	B
9.500	11.000	0.825	1.375	9.503	10.997	X						XXXX	75009500	–	1250	B
9.500	11.500	1.100	1.650	9.504	11.496	X						XXXX	100009500	–	1500	B
9.625	10.250	0.343	0.688	9.627	10.248	X				X		XXXX	31209625	–	625	B
9.625	10.375	0.413	0.688	9.627	10.373			X			X	XXXX	37509625	–	625	B
9.625	11.500	1.031	1.650	9.629	11.496			X				XXXX	93709625	–	1500	B
9.750	10.250	0.275	0.413	9.751	10.249	X	X			X		XXXX	25009750	–	375	B
9.750	10.250	0.275	0.618	9.751	10.249					X		XXXX	25009750	–	562	B
9.750	10.375	0.343	0.688	9.752	10.373					X		XXXX	31209750	–	625	B
9.750	10.500	0.413	0.688	9.752	10.498	X		X				XXXX	37509750	–	625	B
9.750	10.750	0.550	0.825	9.752	10.748	X				X		XXXX	50009750	–	750	B
9.750	11.250	0.825	1.375	9.753	11.247					X		XXXX	75009750	–	1250	B
9.750	11.500	0.963	1.513	9.754	11.496	X						XXXX	87509750	–	1375	B
9.812	11.312	0.825	1.375	9.815	11.309			X				XXXX	75009812	–	1250	B
9.875	10.625	0.413	0.688	9.877	10.623	X					X	XXXX	37509875	–	625	B
9.875	10.875	0.550	0.825	9.877	10.873			X				XXXX	50009875	–	750	B
10.000	10.500	0.275	0.618	10.001	10.499	X	X			X	X	XXXX	25010000	–	562	B
10.000	10.625	0.343	0.688	10.002	10.623	X						XXXX	31210000	–	625	B
10.000	10.750	0.413	0.688	10.002	10.748	X	X			X	X	XXXX	37510000	–	625	B
10.000	11.000	0.550	0.825	10.002	10.998	X	X	X	X	X	X	XXXX	50010000	–	750	B
10.000	11.250	0.688	1.100	10.003	11.247	X		X				XXXX	62510000	–	1000	B
10.000	11.500	0.825	1.375	10.003	11.497	X				X		XXXX	75010000	–	1250	B

†For plastic compounds, see Table 3-1, page 3-11. For rubber compounds, see Table 3-3, page 3-14.
*If used with wear rings, refer to wear ring throat diameter, see Section 9.
**If used with wear rings, refer to wear ring piston diameter, see Section 9.
For custom groove calculations, see Appendix C.

09/01/07

Parker Hannifin Corporation
Engineered Polymer Systems Division
Phone: 801 972 3000

Table 6-8. Standard, Deep and Type B PolyPak Gland Dimensions — Inch (Continued)

A	B	C		D		Compound Codes (X = Standard Offering)†						Part Number				
Rod Diameter	(Rod) Groove Diameter	(Std. PP) Groove Width	(Deep & B) Groove Width	Throat Diameter*		Standard PP		Deep PP		Type B		Com-pound Code		Energizer Code	Add to the part number for Type B or Deep only	Add to the part number for Type B only
(Bore) Groove Diameter	Bore Diameter				Piston Diameter**	Plastic	Rubber	Plastic	Rubber	Plastic	Rubber					
10.000	12.000	1.100	1.650	10.004	11.996	X						XXXX	100010000	–	1500	B
10.125	10.750	0.343	0.688	10.127	10.748	X						XXXX	31210125	–	625	B
10.125	10.875	0.413	0.688	10.127	10.873						X	XXXX	37510125	–	625	B
10.187	11.000	0.447	0.550	10.189	10.998			X				XXXX	40610187	–	500	B
10.250	10.750	0.275	0.618	10.251	10.749	X	X			X	X	XXXX	25010250	–	562	B
10.250	11.000	0.413	0.550	10.252	10.998	X	X			X		XXXX	37510250	–	500	B
10.250	11.000	0.413	0.688	10.252	10.998			X				XXXX	37510250	–	625	B
10.250	11.000	0.413	0.825	10.252	10.998					X		XXXX	37510250	–	750	B
10.250	11.250	0.550	0.825	10.252	11.248					X		XXXX	50010250	–	750	B
10.250	11.500	0.688	1.100	10.253	11.497	X						XXXX	62510250	–	1000	B
10.375	11.000	0.343	0.688	10.377	10.998					X		XXXX	31210375	–	625	B
10.500	11.000	0.275	0.550	10.501	10.999			X				XXXX	25010500	–	500	B
10.500	11.000	0.275	0.618	10.501	10.999	X				X		XXXX	25010500	–	562	B
10.500	11.125	0.343	0.550	10.502	11.123			X				XXXX	31210500	–	500	B
10.500	11.250	0.413	0.413	10.502	11.248	X				X		XXXX	37510500	–	375	B
10.500	11.250	0.413	0.688	10.502	11.248			X		X		XXXX	37510500	–	625	B
10.500	11.500	0.550	0.825	10.502	11.498	X		X		X		XXXX	50010500	–	750	B
10.500	11.750	0.688	0.825	10.503	11.747	X				X		XXXX	62510500	–	750	B
10.500	12.000	0.825	1.100	10.503	11.997	X	X			X		XXXX	75010500	–	1000	B
10.500	12.000	0.825	1.375	10.503	11.997			X				XXXX	75010500	–	1250	B
10.500	12.000	0.825	1.375	10.503	11.997	X						XXXX	75010750	–	1250	B
10.625	11.625	0.550	0.688	10.627	11.623				X			XXXX	50010625	–	625	B
10.625	11.625	0.550	0.825	10.627	11.623			X				XXXX	50010625	–	750	B
10.750	11.250	0.275	0.413	10.751	11.249	X	X					XXXX	25010750	–	375	B
10.750	11.500	0.413	0.688	10.752	11.498	X	X	X		X		XXXX	37510750	–	625	B
10.750	11.750	0.550	0.825	10.752	11.748	X		X		X		XXXX	50010750	–	750	B
11.000	11.500	0.275	0.618	11.001	11.499	X				X		XXXX	25011000	–	562	B
11.000	11.750	0.413	0.688	11.002	11.748	X						XXXX	37511000	–	625	B
11.000	12.000	0.550	0.825	11.002	11.998	X	X	X		X	X	XXXX	50011000	–	750	B
11.000	12.250	0.688	1.100	11.003	12.247	X		X		X		XXXX	62511000	–	1000	B
11.000	12.500	0.825	1.375	11.003	12.497	X		X				XXXX	75011000	–	1250	B
11.125	11.750	0.343	0.688	11.127	11.748						X	XXXX	31211125	–	625	B
11.250	11.750	0.275	0.413	11.251	11.749	X				X		XXXX	25011250	–	375	B
11.250	11.750	0.275	0.618	11.251	11.749					X		XXXX	25011250	–	562	B
11.250	12.000	0.413	0.688	11.252	11.998	X	X	X	X	X		XXXX	37511250	–	625	B
11.250	12.250	0.550	0.825	11.252	12.248	X				X		XXXX	50011250	–	750	B
11.250	12.500	0.688	1.100	11.253	12.497					X		XXXX	62511250	–	1000	B
11.375	12.375	0.550	0.825	11.377	12.373	X				X		XXXX	50011375	–	750	B
11.500	12.000	0.275	0.618	11.501	11.999	X	X			X		XXXX	25011500	–	562	B
11.500	12.250	0.413	0.688	11.502	12.248	X		X		X	X	XXXX	37511500	–	625	B
11.500	12.500	0.550	0.825	11.502	12.498	X		X	X	X		XXXX	50011500	–	750	B
11.500	12.750	0.688	1.100	11.503	12.747					X		XXXX	62511500	–	1000	B

†For plastic compounds, see Table 3-1, page 3-11. For rubber compounds, see Table 3-3, page 3-14.
*If used with wear rings, refer to wear ring throat diameter, see Section 9.
**If used with wear rings, refer to wear ring piston diameter, see Section 9.
For custom groove calculations, see Appendix C.

Parker Hannifin Corporation
Engineered Polymer Systems Division
Phone: 801 972 3000

Table 6-8. Standard, Deep and Type B PolyPak Gland Dimensions — Inch (Continued)

A	B	C		D		Compound Codes (X = Standard Offering)†						Part Number				
Rod Diameter	(Rod) Groove Diameter	(Std. PP) Groove Width	(Deep & B) Groove Width	Throat Diameter*		Standard PP		Deep PP		Type B		Com-pound Code		Energizer Code	Add to the part number for Type B or Deep only	Add to the part number for Type B only
(Bore) Groove Diameter	Bore Diameter				Piston Diameter**	Plastic	Rubber	Plastic	Rubber	Plastic	Rubber					
11.500	13.000	0.825	1.375	11.503	12.997					X		XXXX	75011500	–	1250	B
11.750	12.250	0.275	0.413	11.751	12.249	X						XXXX	25011750	–	375	B
11.750	12.500	0.413	0.688	11.752	12.498	X				X		XXXX	37511750	–	625	B
11.750	12.500	0.413	0.825	11.752	12.498					X		XXXX	37511750	–	750	B
11.750	12.750	0.550	0.825	11.752	12.748	X				X		XXXX	50011750	–	750	B
11.750	13.000	0.688	1.100	11.753	12.997					X		XXXX	62511750	–	1000	B
11.875	12.875	0.550	0.825	11.877	12.873					X		XXXX	50011875	–	750	B
12.000	12.500	0.275	0.413	12.001	12.499	X						XXXX	25012000	–	375	B
12.000	12.625	0.343	0.688	12.002	12.623	X						XXXX	31212000	–	625	B
12.000	12.750	0.413	0.688	12.002	12.748	X				X		XXXX	37512000	–	625	B
12.000	13.000	0.550	0.825	12.002	12.998	X				X		XXXX	50012000	–	750	B
12.000	13.250	0.688	1.100	12.003	13.247	X		X		X		XXXX	62512000	–	1000	B
12.000	13.500	0.825	1.375	12.003	13.497	X				X		XXXX	75012000	–	1250	B
12.000	14.000	1.100	1.650	12.004	13.996	X				X		XXXX	100012000	–	1500	B
12.125	13.125	0.550	0.825	12.127	13.123					X		XXXX	50012125	–	750	B
12.250	12.875	0.343	0.688	12.252	12.873					X		XXXX	31212250	–	625	B
12.250	13.000	0.413	0.688	12.252	12.998	X		X		X	X	XXXX	37512250	–	625	B
12.250	13.250	0.550	0.825	12.252	13.248					X		XXXX	50012250	–	750	B
12.250	13.500	0.688	1.100	12.253	13.497	X				X		XXXX	62512250	–	1000	B
12.250	13.875	0.893	1.238	12.253	13.872			X				XXXX	81212250	–	1125	B
12.500	13.000	0.275	0.413	12.501	12.999	X						XXXX	25012500	–	375	B
12.500	13.125	0.343	0.688	12.502	13.123					X		XXXX	31212500	–	625	B
12.500	13.500	0.550	0.825	12.502	13.498		X	X		X	X	XXXX	50012500	–	750	B
12.500	13.750	0.688	1.100	12.503	13.747			X				XXXX	62512500	–	1000	B
12.500	14.000	0.825	1.375	12.503	13.997	X	X			X		XXXX	75012500	–	1250	B
12.500	14.500	1.100	1.650	12.504	14.496	X						XXXX	100012500	–	1500	B
12.562	13.686	0.618	0.963	12.564	13.684					X		XXXX	56212562	–	875	B
12.562	13.812	0.688	0.963	12.565	13.809	X						XXXX	62501250	–	875	B
12.750	13.250	0.275	0.618	12.751	13.249	X				X		XXXX	25012750	–	562	B
12.750	13.375	0.343	0.688	12.752	13.373	X						XXXX	31212750	–	625	B
12.750	13.500	0.413	0.688	12.752	13.498	X				X	X	XXXX	37512750	–	625	B
12.750	13.750	0.550	0.825	12.752	13.748	X						XXXX	50012750	–	750	B
12.750	14.000	0.688	1.100	12.753	13.997	X		X	X			XXXX	62512750	–	1000	B
13.000	13.500	0.275	0.618	13.001	13.499		X	X		X		XXXX	25013000	–	562	B
13.000	13.750	0.413	0.413	13.002	13.748	X	X			X		XXXX	37513000	–	375	B
13.000	13.750	0.413	0.688	13.002	13.748					X		XXXX	37513000	–	625	B
13.000	14.000	0.550	0.825	13.002	13.998	X	X	X	X	X		XXXX	50013000	–	750	B
13.000	14.250	0.688	1.100	13.003	14.247	X						XXXX	62513000	–	1000	B
13.000	14.500	0.825	1.100	13.003	14.497	X				X		XXXX	75013000	–	1000	B
13.187	14.000	0.447	0.688	13.189	13.998	X						XXXX	40613187	–	625	B
13.250	14.000	0.413	0.618	13.252	13.998				X			XXXX	37513250	–	562	B
13.250	14.000	0.413	0.688	13.252	13.998	X				X	X	XXXX	37513250	–	625	B

†For plastic compounds, see Table 3-1, page 3-11. For rubber compounds, see Table 3-3, page 3-14.
*If used with wear rings, refer to wear ring throat diameter, see Section 9.
**If used with wear rings, refer to wear ring piston diameter, see Section 9.
For custom groove calculations, see Appendix C.

09/01/07

Parker Hannifin Corporation
Engineered Polymer Systems Division
Phone: 801 972 3000

Table 6-8. Standard, Deep and Type B PolyPak Gland Dimensions — Inch (Continued)

A	B	C		D		Compound Codes (X = Standard Offering)†						Part Number				
Rod Diameter	(Rod) Groove Diameter	(Std. PP) Groove Width	(Deep & B) Groove Width	Throat Diameter*		Standard PP		Deep PP		Type B		Com-pound Code		Energizer Code	Add to the part number for Type B or Deep only	Add to the part number for Type B only
(Bore) Groove Diameter	Bore Diameter				Piston Diameter**	Plastic	Rubber	Plastic	Rubber	Plastic	Rubber					
13.250	14.250	0.550	0.825	13.252	14.248			X		X		XXXX	50013250	–	750	B
13.375	14.000	0.343	0.688	13.377	13.998	X						XXXX	31213375	–	625	B
13.500	14.000	0.275	0.618	13.501	13.999	X	X			X		XXXX	25013500	–	562	B
13.500	14.250	0.413	0.688	13.502	14.248	X		X		X		XXXX	37513500	–	625	B
13.500	14.500	0.550	0.825	13.502	14.498	X		X		X		XXXX	50013500	–	750	B
13.500	14.750	0.688	0.963	13.503	14.747					X	X	XXXX	62513500	–	875	B
13.500	15.000	0.825	1.375	13.503	14.997	X						XXXX	75013500	–	1250	B
13.750	14.500	0.413	0.688	13.752	14.498	X				X		XXXX	37513750	–	625	B
13.750	15.250	0.825	1.375	13.753	15.247	X						XXXX	75013750	–	1250	B
14.000	14.500	0.275	0.413	14.001	14.499	X		X				XXXX	25014000	–	375	B
14.000	14.750	0.413	0.688	14.002	14.748	X						XXXX	37514000	–	625	B
14.000	15.000	0.550	0.825	14.002	14.998			X		X		XXXX	50014000	–	750	B
14.000	15.250	0.688	1.100	14.003	15.247					X		XXXX	62514000	–	1000	B
14.000	15.250	0.688	1.100	14.003	15.247	X						XXXX	62514750	–	1000	B
14.000	15.500	0.825	1.375	14.003	15.497	X	X			X		XXXX	75014000	–	1250	B
14.000	15.750	0.963	1.650	14.004	15.746			X				XXXX	87514000	–	1500	B
14.000	16.000	1.100	1.650	14.004	15.996	X				X		XXXX	100014000	–	1500	B
14.125	14.625	0.275	0.413	14.126	14.624	X						XXXX	25014125	–	375	B
14.250	14.750	0.275	0.413	14.251	14.749	X						XXXX	25014250	–	375	B
14.250	15.000	0.413	0.688	14.252	14.998					X		XXXX	37514250	–	625	B
14.250	15.250	0.550	0.825	14.252	15.248	X						XXXX	50014250	–	750	B
14.250	15.750	0.825	1.375	14.253	15.747	X						XXXX	75014250	–	1250	B
14.420	15.420	0.550	0.550	14.422	15.418					X		XXXX	50014420	–	500	B
14.500	15.000	0.275	0.413	14.501	14.999	X						XXXX	25014500	–	375	B
14.500	15.000	0.275	0.413	14.501	14.999			X	X			XXXX	25014500	–	375	B
14.500	15.250	0.413	0.688	14.502	15.248	X						XXXX	37514500	–	625	B
14.500	15.500	0.550	0.825	14.502	15.498	X						XXXX	50014500	–	750	B
14.500	16.000	0.825	1.375	14.503	15.997	X		X		X		XXXX	75014500	–	1250	B
14.750	15.500	0.413	0.688	14.752	15.498	X		X		X		XXXX	37514750	–	625	B
14.750	15.750	0.550	0.825	14.752	15.748					X		XXXX	50014750	–	750	B
14.750	16.000	0.688	1.100	14.753	15.997	X						XXXX	62515000	–	1000	B
14.750	16.250	0.825	1.375	14.753	16.247	X						XXXX	75014750	–	1250	B
14.875	15.500	0.343	0.688	14.877	15.498	X						XXXX	31214875	–	625	B
15.000	15.500	0.275	0.618	15.001	15.499		X			X		XXXX	25015000	–	562	B
15.000	15.750	0.413	0.688	15.002	15.748	X						XXXX	37515000	–	625	B
15.000	16.000	0.550	0.825	15.002	15.998	X	X	X	X	X		XXXX	50015000	–	750	B
15.000	16.500	0.825	1.375	15.003	16.497			X				XXXX	75015000	–	1250	B
15.000	17.000	1.100	1.650	15.004	16.996					X		XXXX	100015000	–	1500	B
15.250	16.000	0.413	0.688	15.252	15.998			X	X			XXXX	37515250	–	625	B
15.250	16.250	0.550	0.825	15.252	16.248					X		XXXX	50015250	–	750	B
15.250	16.500	0.688	1.100	15.253	16.497					X		XXXX	62515250	–	1000	B
15.375	16.000	0.343	0.688	15.377	15.998			X				XXXX	31215375	–	625	B

†For plastic compounds, see Table 3-1, page 3-11. For rubber compounds, see Table 3-3, page 3-14.
*If used with wear rings, refer to wear ring throat diameter, see Section 9.
**If used with wear rings, refer to wear ring piston diameter, see Section 9.
For custom groove calculations, see Appendix C.

Parker Hannifin Corporation
Engineered Polymer Systems Division
Phone: 801 972 3000

Table 6-8. Standard, Deep and Type B PolyPak Gland Dimensions — Inch (Continued)

A	B	C		D		Compound Codes (X = Standard Offering)†						Part Number				
Rod Diameter	(Rod) Groove Diameter	(Std. PP) Groove Width	(Deep & B) Groove Width	Throat Diameter*		Standard PP		Deep PP		Type B		Com-pound Code		Energizer Code	Add to the part number for Type B or Deep only	Add to the part number for Type B only
(Bore) Groove Diameter	Bore Diameter				Piston Diameter**	Plastic	Rubber	Plastic	Rubber	Plastic	Rubber					
15.500	16.000	0.275	0.413	15.501	15.999	X						XXXX	25015500	–	375	B
15.500	16.250	0.413	0.688	15.502	16.248	X						XXXX	37515500	–	625	B
15.500	16.500	0.550	0.825	15.502	16.498	X		X	X	X	X	XXXX	50015500	–	750	B
15.500	16.750	0.688	1.100	15.503	16.747					X	X	XXXX	62515500	–	1000	B
15.625	16.250	0.343	0.688	15.627	16.248					X		XXXX	31215625	–	625	B
15.625	17.125	0.825	1.375	15.628	17.122					X		XXXX	75015625	–	1250	B
15.750	16.250	0.275	0.618	15.751	16.249			X				XXXX	25015750	–	562	B
15.750	16.500	0.413	0.688	15.752	16.498	X					X	XXXX	37515750	–	625	B
15.750	16.750	0.550	0.825	15.752	16.748	X						XXXX	50015750	–	750	B
15.875	16.500	0.343	0.688	15.877	16.498	X						XXXX	31215875	–	625	B
16.000	16.500	0.275	0.275	16.001	16.499			X				XXXX	25016000	–	250	B
16.000	16.500	0.275	0.413	16.001	16.499			X				XXXX	25016000	–	375	B
16.000	16.750	0.413	0.688	16.002	16.748	X		X				XXXX	37516000	–	625	B
16.000	17.000	0.550	0.825	16.002	16.998	X	X	X	X			XXXX	50016000	–	750	B
16.000	17.500	0.825	1.375	16.003	17.497	X	X					XXXX	75016000	–	1250	B
16.000	17.750	0.963	1.375	16.004	17.746			X				XXXX	87516000	–	1250	B
16.000	17.750	0.963	1.513	16.004	17.746			X				XXXX	87516000	–	1375	B
16.000	18.000	1.100	1.375	16.004	17.996	X		X		X		XXXX	100016000	–	1250	B
16.250	17.000	0.413	0.688	16.252	16.998	X						XXXX	37516250	–	625	B
16.263	16.763	0.275	0.413	16.264	16.762					X		XXXX	25016263	–	375	B
16.500	17.250	0.413	0.688	16.502	17.248	X						XXXX	37516500	–	625	B
16.500	17.500	0.550	0.825	16.502	17.498			X		X		XXXX	50016500	–	750	B
16.500	18.000	0.825	0.825	16.503	17.997			X				XXXX	75016500	–	750	B
16.500	18.000	0.825	1.375	16.503	17.997			X				XXXX	75016500	–	1250	B
16.750	17.750	0.550	0.825	16.752	17.748					X		XXXX	50016750	–	750	B
16.750	18.000	0.688	1.100	16.753	17.997	X						XXXX	62516750	–	1000	B
17.000	18.000	0.550	0.825	17.002	17.998	X	X	X	X	X		XXXX	50017000	–	750	B
17.000	19.000	1.100	1.375	17.004	18.996			X				XXXX	100017000	–	1250	B
17.250	18.000	0.413	0.688	17.252	17.998	X						XXXX	37517250	–	625	B
17.500	18.500	0.550	0.825	17.502	18.498	X				X		XXXX	50017500	–	750	B
17.500	18.750	0.688	1.100	17.503	18.747			X				XXXX	62517500	–	1000	B
17.500	19.500	1.100	1.650	17.504	19.496					X		XXXX	100017500	–	1500	B
17.625	19.125	0.825	1.375	17.628	19.122					X		XXXX	75017625	–	1250	B
17.750	18.500	0.413	0.550	17.752	18.498			X				XXXX	37517750	–	500	B
17.750	19.000	0.688	1.100	17.753	18.997					X		XXXX	62517750	–	1000	B
17.875	18.500	0.343	0.550	17.877	18.498						X	XXXX	31217875	–	500	B
17.875	18.563	0.377	0.688	17.877	18.561	X						XXXX	34301062	–	625	B
18.000	19.000	0.550	0.825	18.002	18.998			X		X		XXXX	50018000	–	750	B
18.000	19.250	0.688	1.375	18.003	19.247			X				XXXX	62518000	–	1250	B
18.000	19.500	0.825	1.375	18.003	19.497	X		X				XXXX	75018000	–	1250	B
18.000	19.750	0.963	1.375	18.004	19.746			X				XXXX	87518000	–	1250	B
18.000	20.000	1.100	1.650	18.004	19.996	X						XXXX	100018000	–	1500	B

†For plastic compounds, see Table 3-1, page 3-11. For rubber compounds, see Table 3-3, page 3-14.
*If used with wear rings, refer to wear ring throat diameter, see Section 9.
**If used with wear rings, refer to wear ring piston diameter, see Section 9.
For custom groove calculations, see Appendix C.

Table 6-8. Standard, Deep and Type B PolyPak Gland Dimensions — Inch (Continued)

A	B	C		D		Compound Codes (X = Standard Offering)†						Part Number				
Rod Diameter	(Rod) Groove Diameter	(Std. PP) Groove Width	(Deep & B) Groove Width	Throat Diameter*		Standard PP		Deep PP		Type B		Com-pound Code		Energizer Code	Add to the part number for Type B or Deep only	Add to the part number for Type B only
(Bore) Groove Diameter	Bore Diameter				Piston Diameter**	Plastic	Rubber	Plastic	Rubber	Plastic	Rubber					
18.187	18.937	0.413	0.688	18.189	18.935	X						XXXX	37518187	–	625	B
18.250	18.750	0.275	0.413	18.251	18.749					X		XXXX	25018250	–	375	B
18.500	19.500	0.550	0.825	18.502	19.498			X				XXXX	50018500	–	750	B
18.500	20.500	1.100	1.650	18.504	20.496	X						XXXX	100018500	–	1500	B
18.750	20.000	0.688	1.100	18.753	19.997	X	X			X		XXXX	62518750	–	1000	B
19.000	19.500	0.275	0.413	19.001	19.499	X						XXXX	25019000	–	375	B
19.000	20.000	0.550	0.825	19.002	19.998	X	X	X		X		XXXX	50019000	–	750	B
19.000	20.500	0.825	1.375	19.003	20.497	X				X		XXXX	75019000	–	1250	B
19.250	20.000	0.413	0.688	19.252	19.998					X	X	XXXX	37519250	–	625	B
19.250	20.500	0.688	1.100	19.253	20.497							XXXX	62519250	–	1000	B
19.250	21.000	0.963	1.513	19.254	20.996			X				XXXX	87519250	–	1375	B
19.375	20.250	0.481	0.550	19.377	20.248					X		XXXX	43719375	–	500	B
19.500	20.000	0.275	0.275	19.501	19.999			X				XXXX	25019500	–	250	B
19.500	20.000	0.275	0.343	19.501	19.999			X				XXXX	25019500	–	312	B
19.500	20.250	0.413	0.688	19.502	20.248	X						XXXX	37519500	–	625	B
19.500	20.500	0.550	0.825	19.502	20.498	X		X				XXXX	50019500	–	750	B
19.625	20.625	0.550	0.825	19.627	20.623					X		XXXX	50019625	–	750	B
19.750	21.000	0.688	1.100	19.753	20.997					X		XXXX	62519750	–	1000	B
20.000	21.000	0.550	0.825	20.002	20.998	X		X		X		XXXX	50020000	–	750	B
20.000	21.250	0.688	1.100	20.003	21.247	X						XXXX	62520000	–	1000	B
20.000	21.500	0.825	1.100	20.003	21.497					X		XXXX	75020000	–	1000	B
20.000	21.500	0.825	1.375	20.003	21.497			X		X		XXXX	75020000	–	1250	B
20.000	21.750	0.963	1.513	20.004	21.746	X						XXXX	87520000	–	1375	B
20.000	22.000	1.100	0.963	20.004	21.996			X				XXXX	100020000	–	875	B
20.000	22.000	1.100	1.650	20.004	21.996			X				XXXX	100020000	–	1500	B
20.250	21.250	0.550	0.825	20.252	21.248					X		XXXX	50020250	–	750	B
20.500	21.500	0.550	0.825	20.502	21.498			X				XXXX	50020500	–	750	B
20.500	22.000	0.825	1.100	20.503	21.997	X				X		XXXX	75020500	–	1000	B
20.750	21.500	0.413	0.550	20.752	21.498					X		XXXX	37520750	–	500	B
21.000	21.500	0.275	0.343	21.001	21.499			X				XXXX	25021000	–	312	B
21.000	22.000	0.550	0.825	21.002	21.998	X		X		X		XXXX	50021000	–	750	B
21.000	22.500	0.825	1.375	21.003	22.497			X				XXXX	75021000	–	1250	B
21.500	22.500	0.550	0.825	21.502	22.498			X				XXXX	50021500	–	750	B
21.500	23.000	0.825	1.375	21.503	22.997			X				XXXX	75021500	–	1250	B
21.750	22.250	0.275	0.413	21.751	22.249					X		XXXX	25021750	–	375	B
21.875	22.875	0.550	0.825	21.877	22.873	X						XXXX	50021875	–	750	B
22.000	23.000	0.550	0.825	22.002	22.998					X		XXXX	50022000	–	750	B
22.000	23.500	0.825	1.375	22.003	23.497	X		X				XXXX	75022000	–	1250	B
22.000	24.000	1.100	1.513	22.004	23.996			X				XXXX	100022000	–	1375	B
22.062	22.562	0.275	0.413	22.063	22.561					X		XXXX	25022062	–	375	B
22.500	23.000	0.275	0.343	22.501	22.999	X		X				XXXX	25022500	–	312	B
22.500	24.000	0.825	1.375	22.503	23.997			X				XXXX	75022500	–	1250	B

†For plastic compounds, see Table 3-1, page 3-11. For rubber compounds, see Table 3-3, page 3-14.
*If used with wear rings, refer to wear ring throat diameter, see Section 9.
**If used with wear rings, refer to wear ring piston diameter, see Section 9.
For custom groove calculations, see Appendix C.

Parker Hannifin Corporation
Engineered Polymer Systems Division
Phone: 801 972 3000

Table 6-8. Standard, Deep and Type B PolyPak Gland Dimensions — Inch (Continued)

A	B	C		D		Compound Codes (X = Standard Offering)†						Part Number				
Rod Diameter	(Rod) Groove Diameter	(Std. PP) Groove Width	(Deep & B) Groove Width	Throat Diameter*		Standard PP		Deep PP		Type B		Com-pound Code		Energizer Code	Add to the part number for Type B or Deep only	Add to the part number for Type B only
(Bore) Groove Diameter	Bore Diameter				Piston Diameter**	Plastic	Rubber	Plastic	Rubber	Plastic	Rubber					
23.000	23.500	0.275	0.413	23.001	23.499	X				X		XXXX	25023000	–	375	B
23.000	23.750	0.413	0.688	23.002	23.748	X						XXXX	37523000	–	625	B
23.000	24.000	0.550	0.825	23.002	23.998	X						XXXX	50023000	–	750	B
23.250	24.000	0.413	0.688	23.252	23.998			X				XXXX	37523250	–	625	B
23.375	25.375	1.100	1.650	23.379	25.371	X						XXXX	100023375	–	1500	B
23.500	24.000	0.275	0.413	23.501	23.999	X						XXXX	25023500	–	375	B
23.500	24.500	0.550	0.825	23.502	24.498	X						XXXX	50023500	–	750	B
23.500	25.000	0.825	1.375	23.503	24.997					X		XXXX	75023500	–	1250	B
23.750	24.250	0.275	0.413	23.751	24.249					X		XXXX	25023750	–	375	B
24.000	24.500	0.275	0.413	24.001	24.499	X				X		XXXX	25024000	–	375	B
24.000	25.000	0.550	0.825	24.002	24.998					X		XXXX	50024000	–	750	B
24.000	25.500	0.825	1.375	24.003	25.497			X				XXXX	75024000	–	1250	B
24.000	25.750	0.963	1.375	24.004	25.746			X				XXXX	87524000	–	1250	B
24.000	26.000	1.100	1.650	24.004	25.996					X		XXXX	100024000	–	1500	B
24.500	25.000	0.275	0.413	24.501	24.999	X						XXXX	25024500	–	375	B
24.500	25.500	0.550	0.825	24.502	25.498					X		XXXX	50024500	–	750	B
24.750	26.000	0.688	1.100	24.753	25.997	X						XXXX	62524750	–	1000	B
24.875	25.875	0.550	0.825	24.877	25.873					X		XXXX	50024875	–	750	B
25.000	25.750	0.413	0.688	25.002	25.748	X				X		XXXX	37525000	–	625	B
25.000	26.000	0.550	0.825	25.002	25.998	X						XXXX	50025000	–	750	B
25.000	27.000	1.100	1.477	25.004	26.996			X				XXXX	100025000	–	1343	B
25.250	25.750	0.275	0.413	25.251	25.749					X		XXXX	25025250	–	375	B
25.250	26.000	0.413	0.688	25.252	25.998	X						XXXX	37525250	–	625	B
25.250	26.250	0.550	0.825	25.252	26.248			X				XXXX	50025250	–	750	B
25.500	27.000	0.825	1.375	25.503	26.997	X						XXXX	75025500	–	1250	B
26.000	26.750	0.413	0.688	26.002	26.748						X	XXXX	37526000	–	625	B
26.000	27.000	0.550	0.825	26.002	26.998	X						XXXX	50026000	–	750	B
26.000	27.500	0.825	1.375	26.003	27.497	X						XXXX	75026000	–	1250	B
26.125	27.125	0.550	0.825	26.127	27.123					X		XXXX	50026125	–	750	B
26.500	27.500	0.550	0.825	26.502	27.498	X						XXXX	50026500	–	750	B
26.718	27.218	0.275	0.343	26.719	27.217			X				XXXX	25026718	–	312	B
27.000	28.000	0.550	0.825	27.002	27.998			X		X		XXXX	50027000	–	750	B
27.000	29.000	1.100	1.650	27.004	28.996	X						XXXX	100027000	–	1500	B
27.250	28.000	0.413	0.688	27.252	27.998	X						XXXX	37527250	–	625	B
27.500	28.000	0.275	0.413	27.501	27.999	X						XXXX	25027500	–	375	B
27.500	28.500	0.550	0.825	27.502	28.498			X				XXXX	50027500	–	750	B
27.625	28.625	0.550	0.825	27.627	28.623					X		XXXX	50027625	–	750	B
28.000	29.000	0.550	0.825	28.002	28.998	X						XXXX	50028000	–	750	B
28.000	30.000	1.100	1.650	28.004	29.996	X						XXXX	100028000	–	1500	B
28.187	29.187	0.550	0.825	28.189	29.185					X		XXXX	50028187	–	750	B
28.500	29.500	0.550	0.825	28.502	29.498	X						XXXX	50028500	–	750	B
28.500	29.500	0.550	0.825	28.502	29.498			X				XXXX	50028500	–	750	B

†For plastic compounds, see Table 3-1, page 3-11. For rubber compounds, see Table 3-3, page 3-14.
*If used with wear rings, refer to wear ring throat diameter, see Section 9.
**If used with wear rings, refer to wear ring piston diameter, see Section 9.
For custom groove calculations, see Appendix C.

09/01/07

Parker Hannifin Corporation
Engineered Polymer Systems Division
Phone: 801 972 3000

Table 6-8. Standard, Deep and Type B PolyPak Gland Dimensions — Inch (Continued)

A	B	C		D		Compound Codes (X = Standard Offering)†						Part Number				
Rod Diameter	(Rod) Groove Diameter	(Std. PP) Groove Width	(Deep & B) Groove Width	Throat Diameter*		Standard PP		Deep PP		Type B		Com-pound Code		Energizer Code	Add to the part number for Type B or Deep only	Add to the part number for Type B only
(Bore) Groove Diameter	Bore Diameter				Piston Diameter**	Plastic	Rubber	Plastic	Rubber	Plastic	Rubber					
28.750	29.500	0.413	0.688	28.752	29.498			X				XXXX	37528750	–	625	B
29.000	30.000	0.550	0.825	29.002	29.998			X		X		XXXX	50029000	–	750	B
29.000	31.000	1.100	1.650	29.004	30.996					X		XXXX	100029000	–	1500	B
29.750	30.750	0.550	0.825	29.752	30.748					X		XXXX	50029750	–	750	B
30.000	30.750	0.413	0.688	30.002	30.748					X		XXXX	37530000	–	625	B
30.000	30.750	0.413	0.688	30.002	30.748	X						XXXX	37531750	–	625	B
30.000	31.000	0.550	0.687	30.002	30.998			X				XXXX	50030000	–	625	B
30.000	31.250	0.688	1.100	30.003	31.247					X		XXXX	62530000	–	1000	B
30.000	32.000	1.100	1.650	30.004	31.996					X		XXXX	100030000	–	1500	B
30.250	31.250	0.550	0.825	30.252	31.248			X				XXXX	50030250	–	750	B
30.375	31.375	0.550	0.825	30.377	31.373					X		XXXX	50030375	–	750	B
30.750	31.750	0.550	0.825	30.752	31.748					X		XXXX	50030750	–	750	B
31.000	32.000	0.550	0.825	31.002	31.998	X						XXXX	50031000	–	750	B
31.000	33.000	1.100	1.650	31.004	32.996	X						XXXX	100031000	–	1500	B
31.500	32.250	0.413	0.688	31.502	32.248			X				XXXX	37531500	–	625	B
31.500	32.500	0.550	0.825	31.502	32.498					X		XXXX	50031500	–	750	B
31.750	32.500	0.413	0.688	31.752	32.498	X						XXXX	37536250	–	625	B
32.000	32.500	0.275	0.413	32.001	32.499	X						XXXX	25032000	–	375	B
32.000	33.000	0.550	0.825	32.002	32.998	X						XXXX	50032000	–	750	B
32.000	33.500	0.825	0.963	32.003	33.497			X				XXXX	75032000	–	875	B
33.000	34.000	0.550	0.825	33.002	33.998			X		X		XXXX	50033000	–	750	B
34.000	34.750	0.413	0.688	34.002	34.748			X				XXXX	37534000	–	625	B
34.500	35.000	0.275	0.413	34.501	34.999	X						XXXX	25034500	–	375	B
34.500	35.500	0.550	0.825	34.502	35.498					X		XXXX	50034500	–	750	B
35.000	35.750	0.413	0.688	35.002	35.748			X				XXXX	37535000	–	625	B
35.750	36.750	0.550	0.825	35.752	36.748	X						XXXX	50035750	–	750	B
36.000	36.750	0.413	0.688	36.002	36.748			X				XXXX	37536000	–	625	B
36.000	37.000	0.550	0.825	36.002	36.998	X						XXXX	50036000	–	750	B
37.000	37.750	0.413	0.688	37.002	37.748			X				XXXX	37537000	–	625	B
37.000	38.000	0.550	0.825	37.002	37.998	X		X				XXXX	50037000	–	750	B
37.500	38.250	0.413	0.688	37.502	38.248	X						XXXX	37537500	–	625	B
38.000	39.000	0.550	0.825	38.002	38.998					X		XXXX	50038000	–	750	B
38.250	39.250	0.550	0.825	38.252	39.248					X		XXXX	50038250	–	750	B
38.500	39.250	0.413	0.688	38.502	39.248	X						XXXX	37538500	–	625	B
38.750	39.750	0.550	0.825	38.752	39.748					X		XXXX	50038750	–	750	B
39.135	40.135	0.550	0.825	39.137	40.133	X						XXXX	50039135	–	750	B
40.000	40.750	0.413	0.688	40.002	40.748			X				XXXX	37540000	–	625	B
41.000	42.000	0.550	0.825	41.002	41.998					X		XXXX	50041000	–	750	B
41.485	42.485	0.550	0.825	41.487	42.483	X						XXXX	50041485	–	750	B
41.750	42.750	0.550	0.825	41.752	42.748					X		XXXX	50041750	–	750	B
42.000	43.000	0.550	0.688	42.002	42.998					X		XXXX	50042000	–	625	B
42.000	43.000	0.550	0.825	42.002	42.998					X		XXXX	50042000	–	750	B

†For plastic compounds, see Table 3-1, page 3-11. For rubber compounds, see Table 3-3, page 3-14.
*If used with wear rings, refer to wear ring throat diameter, see Section 9.
**If used with wear rings, refer to wear ring piston diameter, see Section 9.
For custom groove calculations, see Appendix C.

Parker Hannifin Corporation
Engineered Polymer Systems Division
Phone: 801 972 3000

Table 6-8. Standard, Deep and Type B PolyPak Gland Dimensions — Inch (Continued)

A	B	C		D		Compound Codes (X = Standard Offering)†						Part Number				
Rod Diameter	(Rod) Groove Diameter	(Std. PP) Groove Width	(Deep & B) Groove Width	Throat Diameter*		Standard PP		Deep PP		Type B		Com-pound Code		Energizer Code	Add to the part number for Type B or Deep only	Add to the part number for Type B only
(Bore) Groove Diameter	Bore Diameter				Piston Diameter**	Plastic	Rubber	Plastic	Rubber	Plastic	Rubber					
42.267	43.267	0.550	0.825	42.269	43.265	X						**XXXX**	**50042267**	**–**	**750**	**B**
43.500	44.500	0.550	0.825	43.502	44.498					X		**XXXX**	**50043500**	**–**	**750**	**B**
44.125	45.125	0.550	0.825	44.127	45.123					X		**XXXX**	**50044125**	**–**	**750**	**B**
44.618	45.618	0.550	0.825	44.620	45.616	X						**XXXX**	**50044618**	**–**	**750**	**B**
46.250	47.250	0.550	0.825	46.252	47.248					X		**XXXX**	**50046250**	**–**	**750**	**B**
47.500	48.500	0.550	0.825	47.502	48.498					X		**XXXX**	**50047500**	**–**	**750**	**B**

†For plastic compounds, see Table 3-1, page 3-11. For rubber compounds, see Table 3-3, page 3-14.
*If used with wear rings, refer to wear ring throat diameter, see Section 9.
**If used with wear rings, refer to wear ring piston diameter, see Section 9.
For custom groove calculations, see Appendix C.

NOTE: For sizes larger than those shown in the table, please contact your local Parker Seal representative.

Parker Hannifin Corporation
Engineered Polymer Systems Division
Phone: 801 972 3000

Symmetrical Seal
SL Profile

SL Profile, Dual Compound Dual Lip Seal

Parker's SL profile is considered a multiple lip seal. The primary sealing lip is provided by the precision knife trimmed rubber element that snaps into the Molythane base. The base of the SL profile provides the secondary lip which is aligned directly below the primary lip to provide extrusion, and wear resistance. The SL Profile combines the sealing benefit of rubber with the wear and strength of Molythane. The beveled rubber lip geometry is excellent for cutting fluid film and the squeeze forces across the lips maintain sealing contact under low pressure or vacuum. The ability of Parker to supply a variety of rubber compounds allows the SL profile to be compatible with a wide range of pressure, temperature and fluids. The SL profile is designed to work as a stand alone rod seal or can be used in tandem with a buffer seal. In piston applications, this seal will function as a unidirectional seal. SL profiles should not be installed back to back in bi-directional pressure applications, as a pressure trap between the seals may occur.

Technical Data

Standard Materials*	Temperature Range	Pressure Range†	Surface Speed
Rubber Element:			
N4180A80	-40°F to 250°F (-40°C to 121°C)	1,250 psi (86 bar)	< 1.6 ft/s (0.5 m/s)
Base:			
P4615A90	-65°F to 200°F (-54°C to 93°C)	5,000 psi (344 bar)	< 1.6 ft/s (0.5 m/s)

SL Cross-Section

***Alternate Materials:** For applications that may require an alternate material, please contact your local Parker Seal representative.

†**Pressure Range** without wear rings (see Table 2-4, page 2-5).

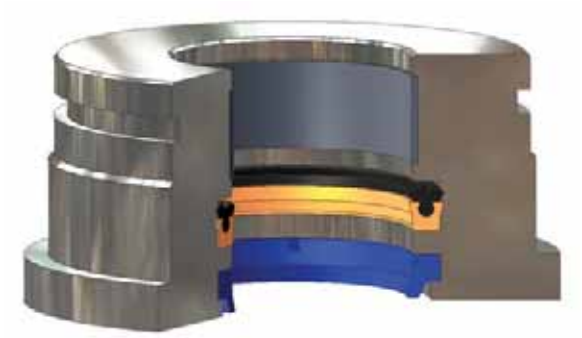

SL installed in Rod Gland

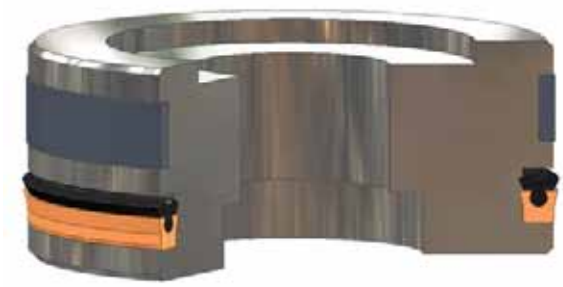

SL installed in Piston Gland

09/01/07

Parker Hannifin Corporation
Engineered Polymer Systems Division
Phone: 801 972 3000

www.parkerseals.com

Part Number Nomenclature — SL Profile

Table 6-9. SL Profile — Inch

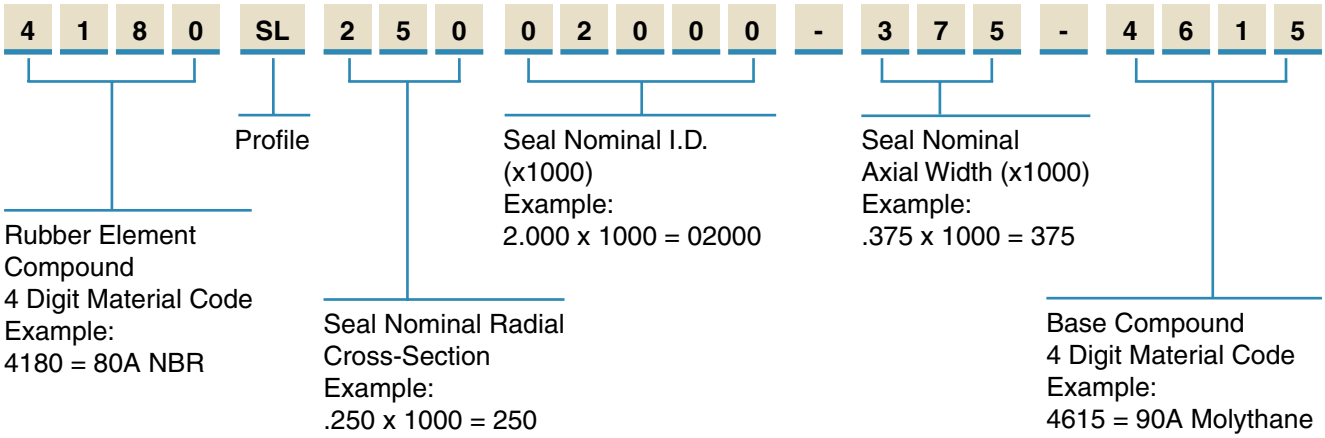

Gland Dimensions — SL Profile

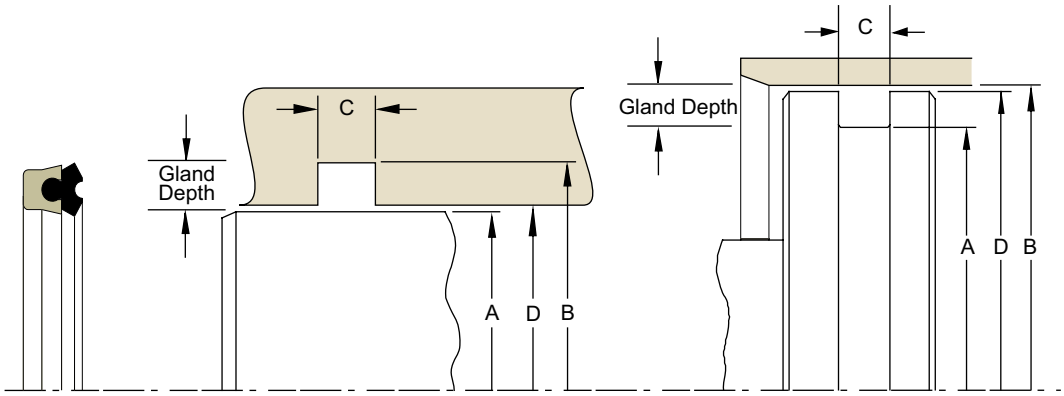

Table 6-10A. Rod Gland Dimension Tolerances

Nominal Gland Depth	A Rod Diameter	B Groove Diameter	C Groove Width	D Throat Diameter
1/8	+.000/-.001	+.002/-.000	+.015/-.000	+.002/-.000
3/16	+.000/-.002	+.002/-.000		+.002/-.000
1/4	+.000/-.002	+.003/-.000		+.003/-.000
5/16	+.000/-.002	+.004/-.000		+.003/-.000
3/8	+.000/-.002	+.005/-.000		+.004/-.000
7/16	+.000/-.003	+.006/-.000		+.004/-.000
1/2	+.000/-.003	+.007/-.000		+.005/-.000
5/8	+.000/-.003	+.009/-.000		+.006/-.000
3/4	+.000/-.004	+.011/-.000		+.007/-.000
1	+.000/-.005	+.015/-.000		+.009/-.000

Please refer to Engineering Section 2, page 2-8 for surface finish and additional hardware considerations.

Table 6-10B. Piston Gland Dimension Tolerances

Nominal Gland Depth	B Bore Diameter	A Groove Diameter	C Groove Width	D Piston Diameter
1/8	+.002/-.000	+.000/-.002	+.015/-.000	+.000/-.001
3/16	+.002/-.000	+.000/-.002		+.000/-.002
1/4	+.003/-.000	+.000/-.003		+.000/-.002
5/16	+.003/-.000	+.000/-.004		+.000/-.002
3/8	+.004/-.000	+.000/-.005		+.000/-.002
7/16	+.005/-.000	+.000/-.006		+.000/-.002
1/2	+.005/-.000	+.000/-.007		+.000/-.003
9/16	+.006/-.000	+.000/-.008		+.000/-.003
5/8	+.006/-.000	+.000/-.009		+.000/-.003
3/4	+.007/-.000	+.000/-.010		+.000/-.004
7/8	+.008/-.000	+.000/-.011		+.000/-.005
1	+.009/-.000	+.000/-.012		+.000/-.005

Parker Hannifin Corporation
Engineered Polymer Systems Division
Phone: 801 972 3000

Table 6-11. SL Gland Dimensions — Inch

A	B	C	D		
Rod Diameter	(Rod) Groove Diameter	(Rod) Groove Width	Throat Diameter*		
(Bore) Groove Diameter	Bore Diameter	(Bore) Groove Width		(Bore) Piston Diameter**	Part Number
1.125	1.500	0.343	1.126	1.499	**4180SL18701125-312-4615**
1.250	1.625	0.343	1.251	1.624	**4180SL18701250-312-4615**
1.250	1.875	0.550	1.252	1.873	**4180SL31201250-500-4615**
1.500	1.875	0.412	1.501	1.874	**4180SL18701500-375-4615**
1.500	2.000	0.412	1.501	1.999	**4180SL25001500-375-4615**
1.625	2.000	0.412	1.626	1.999	**4180SL18701625-375-4615**
1.750	2.125	0.412	1.751	2.124	**4180SL18701750-375-4615**
1.750	2.250	0.412	1.751	2.249	**4180SL25001750-375-4615**
1.750	2.500	0.687	1.752	2.498	**4180SL37501750-625-4615**
2.000	2.375	0.412	2.001	2.374	**4180SL18702000-375-4615**
2.000	2.500	0.412	2.001	2.499	**4180SL25002000-375-4615**
2.000	2.750	0.687	2.002	2.748	**4180SL37502000-625-4615**
2.500	3.000	0.412	2.501	2.999	**4180SL25002500-375-4615**
2.625	3.375	0.687	2.627	3.373	**4180SL37502625-625-4615**
2.750	3.250	0.412	2.751	3.249	**4180SL25002750-375-4615**
3.000	3.500	0.412	3.001	3.499	**4180SL25003000-375-4615**
3.250	3.750	0.412	3.251	3.749	**4180SL25003250-375-4615**
3.500	4.000	0.412	3.501	3.999	**4180SL25003500-375-4615**
3.500	4.250	0.687	3.502	4.248	**4180SL37503500-625-4615**
4.000	4.500	0.412	4.001	4.499	**4180SL25004000-375-4615**
4.250	4.750	0.412	4.251	4.749	**4180SL25004250-375-4615**
4.500	5.000	0.412	4.501	4.999	**4180SL25004500-375-4615**
4.750	5.250	0.412	4.751	5.249	**4180SL25004750-375-4615**
5.250	5.750	0.412	5.251	5.749	**4180SL25005250-375-4615**
6.500	7.500	0.825	6.502	7.498	**4180SL50006500-750-4615**

*If used with wear rings, refer to wear ring throat diameter, see Section 9.
**If used with wear rings, refer to wear ring piston diameter, see Section 9.
For custom groove calculations, see Appendix C.

NOTE: For sizes larger than those shown in the table, please contact your local Parker Seal representative.

Parker Hannifin Corporation
Engineered Polymer Systems Division
Phone: 801 972 3000

Symmetrical Seal
US Profile

US Profile, Symmetrical u-cup Seal

The Parker US profile is a symmetrical, beveled lip u-cup designed for use in hydraulic cylinder applications. The symmetrical shape allows interchangeability between rod and piston applications. A precision knife trimming process is utilized to create the beveled sealing lips. This ensures that the inside and outside diameter sealing edges provide excellent fluid wiping action. The US profile is a single acting seal. Two seals can be installed back to back, in separate grooves, to seal dual acting pistons without pressure trapping fluid between the seals. The US profile is an economical choice, available in Parker's wear and extrusion resistant Molythane compound.

Technical Data

Standard Materials*	Temperature Range	Pressure Range†	Surface Speed
P4615A90	-65°F to 200°F (-54°C to 93°C)	5,000 psi (344 bar)	< 1.6 ft/s (0.5 m/s)

***Alternate Materials:** For applications that may require an alternate material, please contact your local Parker Seal representative.

†**Pressure Range** without wear rings (see Table 2-4, page 2-5).

US Cross-Section

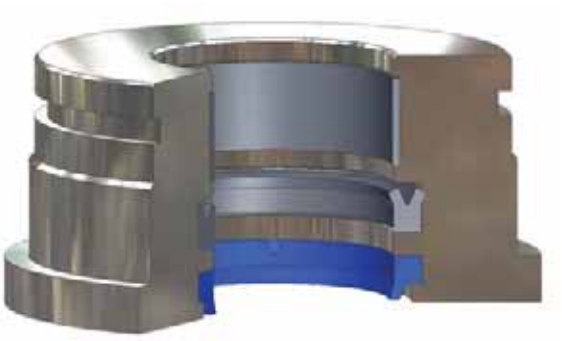

US installed in Rod Gland

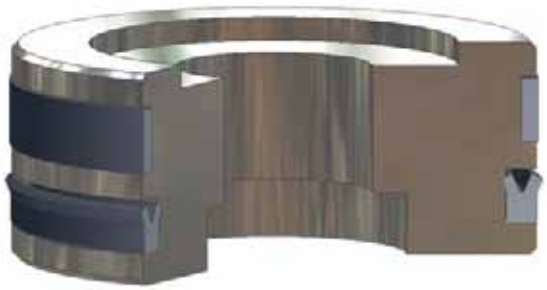

US installed in Piston Gland

Parker Hannifin Corporation
Engineered Polymer Systems Division
Phone: 801 972 3000

Part Number Nomenclature — US Profile

Table 6-12. US Profile — Inch

4	6	1	5	US	2	5	0	0	2	5	0	0	-	3	7	5

Seal Compound
4 Digit Material Code
Example:
4615 = 90A Molythane

Profile

Gland Depth (x1000) or Seal Nominal Radial Cross-Section
Example: .250 x 1000 = 250

Seal Nominal I.D. (x1000)
Example: 2.500 x 1000 = 02500

Seal Nominal Axial Width (x1000)
Example: .375 x 1000 = 375

Gland Dimensions — US Profile

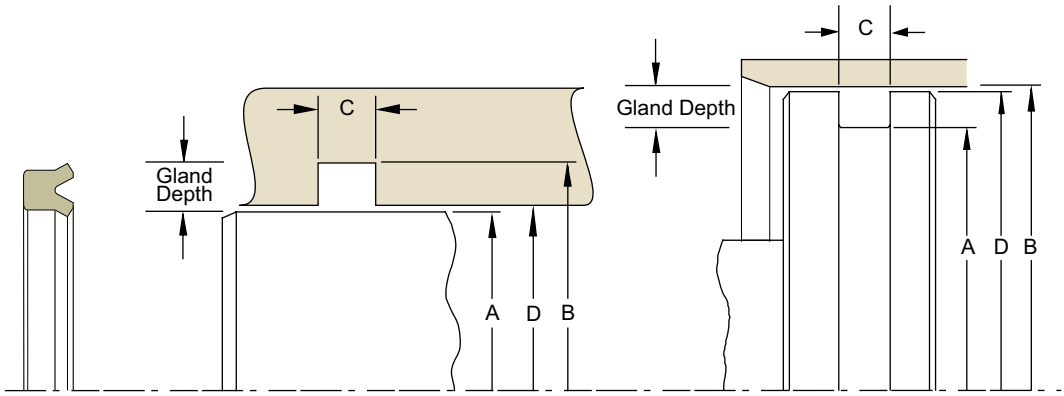

Table 6-13A. Rod Gland Dimension Tolerances

Nominal Gland Depth	A Rod Diameter	B Groove Diameter	C Groove Width	D Throat Diameter
1/8	+.000/-.001	+.002/-.000	+.015/-.000	+.002/-.000
3/16	+.000/-.002	+.002/-.000		+.002/-.000
1/4	+.000/-.002	+.003/-.000		+.003/-.000
5/16	+.000/-.002	+.004/-.000		+.003/-.000
3/8	+.000/-.002	+.005/-.000		+.004/-.000
7/16	+.000/-.003	+.006/-.000		+.004/-.000
1/2	+.000/-.003	+.007/-.000		+.005/-.000
5/8	+.000/-.003	+.009/-.000		+.006/-.000
3/4	+.000/-.004	+.011/-.000		+.007/-.000
1	+.000/-.005	+.015/-.000		+.009/-.000

Please refer to Engineering Section 2, page 2-8 for surface finish and additional hardware considerations.

Table 6-13B. Piston Gland Dimension Tolerances

Nominal Gland Depth	B Bore Diameter	A Groove Diameter	C Groove Width	D Piston Diameter
1/8	+.002/-.000	+.000/-.002	+.015/-.000	+.000/-.001
3/16	+.002/-.000	+.000/-.002		+.000/-.002
1/4	+.003/-.000	+.000/-.003		+.000/-.002
5/16	+.003/-.000	+.000/-.004		+.000/-.002
3/8	+.004/-.000	+.000/-.005		+.000/-.002
7/16	+.005/-.000	+.000/-.006		+.000/-.002
1/2	+.005/-.000	+.000/-.007		+.000/-.003
9/16	+.006/-.000	+.000/-.008		+.000/-.003
5/8	+.006/-.000	+.000/-.009		+.000/-.003
3/4	+.007/-.000	+.000/-.010		+.000/-.004
7/8	+.008/-.000	+.000/-.011		+.000/-.005
1	+.009/-.000	+.000/-.012		+.000/-.005

Parker Hannifin Corporation
Engineered Polymer Systems Division
Phone: 801 972 3000

Table 6-14. US Gland Dimensions — Inch

A	B	C	D		Part Number
Rod Diameter	(Rod) Groove Diameter	(Rod) Groove Width	Throat Diameter*		
(Bore) Groove Diameter	Bore Diameter	(Bore) Groove Width		(Bore) Piston Diameter**	
0.093	0.343	0.138	0.094	0.342	**4615US12500093-125**
0.187	0.562	0.343	0.188	0.561	**4615US18700187-312**
0.250	0.500	0.275	0.251	0.499	**4615US12500250-250**
0.250	0.625	0.343	0.251	0.624	**4615US18700250-312**
0.250	0.750	0.343	0.251	0.749	**4615US25000250-312**
0.312	0.562	0.138	0.313	0.561	**4615US12500312-125**
0.312	0.562	0.275	0.313	0.561	**4615US12500312-250**
0.312	0.812	0.343	0.313	0.811	**4615US25000312-312**
0.312	0.812	0.413	0.313	0.811	**4615US25000312-375**
0.375	0.625	0.275	0.376	0.624	**4615US12500375-250**
0.375	0.750	0.206	0.376	0.749	**4615US18700375-187**
0.375	0.750	0.343	0.376	0.749	**4615US18700375-312**
0.375	0.875	0.343	0.376	0.874	**4615US25000375-312**
0.437	0.687	0.206	0.438	0.686	**4615US12500437-187**
0.500	0.750	0.138	0.501	0.749	**4615US12500500-125**
0.500	0.750	0.275	0.501	0.749	**4615US12500500-250**
0.500	0.875	0.275	0.501	0.874	**4615US18700500-250**
0.500	0.875	0.343	0.501	0.874	**4615US18700500-312**
0.562	0.750	0.102	0.563	0.749	**4615US09300562-093**
0.500	1.000	0.275	0.501	0.999	**4615US25000500-250**
0.562	1.062	0.275	0.563	1.061	**4615US25000562-250**
0.625	0.875	0.138	0.626	0.874	**4615US12500625-125**
0.625	0.875	0.206	0.626	0.874	**4615US12500625-187**
0.625	0.875	0.275	0.626	0.874	**4615US12500625-250**
0.625	1.000	0.275	0.626	0.999	**4615US18700625-250**
0.625	1.000	0.343	0.626	0.999	**4615US18700625-312**
0.625	1.125	0.413	0.626	1.124	**4615US25000625-375**
0.750	1.000	0.138	0.751	0.999	**4615US12500750-125**
0.750	1.000	0.206	0.751	0.999	**4615US12500750-187**
0.750	1.125	0.343	0.751	1.124	**4615US18700750-312**
0.750	1.250	0.275	0.751	1.249	**4615US25000750-250**
0.750	1.250	0.413	0.751	1.249	**4615US25000750-375**
0.812	1.062	0.275	0.813	1.061	**4615US12500812-250**
0.812	1.187	0.343	0.813	1.186	**4615US18700812-312**
0.875	1.125	0.189	0.876	1.124	**4615US12500875-172**
0.875	1.125	0.275	0.876	1.124	**4615US12500875-250**
0.875	1.250	0.275	0.876	1.249	**4615US18700875-250**
0.875	1.250	0.343	0.876	1.249	**4615US18700875-312**

*If used with wear rings, refer to wear ring throat diameter, see Section 9.
**If used with wear rings, refer to wear ring piston diameter, see Section 9.
For custom groove calculations, see Appendix C.

Parker Hannifin Corporation
Engineered Polymer Systems Division
Phone: 801 972 3000

Table 6-14. US Gland Dimensions — Inch (Continued)

A	B	C	D		Part Number
Rod Diameter	(Rod) Groove Diameter	(Rod) Groove Width	Throat Diameter*		
(Bore) Groove Diameter	Bore Diameter	(Bore) Groove Width		(Bore) Piston Diameter**	
1.000	1.250	0.138	1.001	1.249	**4615US12501000-125**
1.000	1.250	0.275	1.001	1.249	**4615US12501000-250**
1.000	1.375	0.206	1.001	1.374	**4615US18701000-187**
1.000	1.375	0.343	1.001	1.374	**4615US18701000-312**
1.000	1.500	0.275	1.001	1.499	**4615US25001000-250**
1.000	1.500	0.413	1.001	1.499	**4615US25001000-375**
1.125	1.375	0.206	1.126	1.374	**4615US12501125-187**
1.125	1.500	0.206	1.126	1.499	**4615US18701125-187**
1.125	1.500	0.275	1.126	1.499	**4615US18701125-250**
1.125	1.625	0.275	1.126	1.624	**4615US25001125-250**
1.187	1.687	0.275	1.188	1.686	**4615US25001187-250**
1.250	1.500	0.138	1.251	1.499	**4615US12501250-125**
1.250	1.500	0.206	1.251	1.499	**4615US12501250-187**
1.250	1.500	0.275	1.251	1.499	**4615US12501250-250**
1.250	1.625	0.413	1.251	1.624	**4615US18701250-375**
1.250	1.750	0.275	1.251	1.749	**4615US25001250-250**
1.250	1.750	0.413	1.251	1.749	**4615US25001250-375**
1.250	1.875	0.413	1.252	1.873	**4615US31201250-375**
1.312	1.687	0.343	1.313	1.686	**4615US18701312-312**
1.375	1.625	0.172	1.376	1.624	**4615US12501375-156**
1.375	1.625	0.206	1.376	1.624	**4615US12501375-187**
1.375	1.750	0.343	1.376	1.749	**4615US18701375-312**
1.375	1.875	0.413	1.376	1.874	**4615US25001375-375**
1.375	2.000	0.343	1.377	1.998	**4615US31201375-312**
1.500	1.750	0.206	1.501	1.749	**4615US12501500-187**
1.500	1.750	0.275	1.501	1.749	**4615US12501500-250**
1.500	1.875	0.206	1.501	1.874	**4615US18701500-187**
1.500	1.875	0.343	1.501	1.874	**4615US18701500-312**
1.500	1.875	0.413	1.501	1.874	**4615US18701500-375**
1.500	2.000	0.343	1.501	1.999	**4615US25001500-312**
1.500	2.000	0.413	1.501	1.999	**4615US25001500-375**
1.500	2.125	0.343	1.502	2.123	**4615US31201500-312**
1.625	2.000	0.206	1.626	1.999	**4615US18701625-187**
1.625	2.000	0.275	1.626	1.999	**4615US18701625-250**
1.625	2.000	0.343	1.626	1.999	**4615US18701625-312**
1.625	2.000	0.413	1.626	1.999	**4615US18701625-375**
1.750	2.000	0.138	1.751	1.999	**4615US12501750-125**
1.750	2.125	0.206	1.751	2.124	**4615US18701750-187**

*If used with wear rings, refer to wear ring throat diameter, see Section 9.
**If used with wear rings, refer to wear ring piston diameter, see Section 9.
For custom groove calculations, see Appendix C.

Parker Hannifin Corporation
Engineered Polymer Systems Division
Phone: 801 972 3000

Table 6-14. US Gland Dimensions — Inch (Continued)

A	B	C	D		Part Number
Rod Diameter	(Rod) Groove Diameter	(Rod) Groove Width	Throat Diameter*		
(Bore) Groove Diameter	Bore Diameter	(Bore) Groove Width		(Bore) Piston Diameter**	
1.750	2.125	0.275	1.751	2.124	**4615US18701750-250**
1.750	2.125	0.343	1.751	2.124	**4615US18701750-312**
1.750	2.125	0.413	1.751	2.124	**4615US18701750-375**
1.750	2.375	0.343	1.752	2.373	**4615US31201750-312**
1.875	2.250	0.308	1.876	2.249	**4615US18701875-280**
1.875	2.500	0.343	1.877	2.498	**4615US31201875-312**
1.875	2.500	0.550	1.877	2.498	**4615US31201875-500**
2.000	2.375	0.275	2.001	2.374	**4615US18702000-250**
2.000	2.375	0.343	2.001	2.374	**4615US18702000-312**
2.000	2.375	0.413	2.001	2.374	**4615US18702000-375**
2.000	2.500	0.413	2.001	2.499	**4615US25002000-375**
2.000	2.625	0.413	2.002	2.623	**4615US31202000-375**
2.125	2.500	0.206	2.126	2.499	**4615US18702125-187**
2.125	2.500	0.343	2.126	2.499	**4615US18702125-312**
2.250	2.625	0.343	2.251	2.624	**4615US18702250-312**
2.250	2.750	0.413	2.251	2.749	**4615US25002250-375**
2.250	2.875	0.550	2.252	2.873	**4615US31202250-500**
2.250	3.000	0.688	2.252	2.998	**4615US37502250-625**
2.375	2.875	0.413	2.376	2.874	**4615US25002375-375**
2.500	2.875	0.343	2.501	2.874	**4615US18702500-312**
2.500	2.875	0.413	2.501	2.874	**4615US18702500-375**
2.500	3.000	0.343	2.501	2.999	**4615US25002500-312**
2.500	3.000	0.413	2.501	2.999	**4615US25002500-375**
2.500	3.125	0.413	2.502	3.123	**4615US31202500-375**
2.625	3.000	0.413	2.626	2.999	**4615US18702625-375**
2.625	3.250	0.550	2.627	3.248	**4615US31202625-500**
2.750	3.250	0.275	2.751	3.249	**4615US25002750-250**
2.750	3.250	0.413	2.751	3.249	**4615US25002750-375**
2.750	3.500	0.413	2.752	3.498	**4615US37502750-375**
2.750	3.500	0.688	2.752	3.498	**4615US37502750-625**
3.000	3.375	0.413	3.001	3.374	**4615US18703000-375**
3.000	3.500	0.413	3.001	3.499	**4615US25003000-375**
3.125	3.500	0.413	3.126	3.499	**4615US18703125-375**
3.125	3.750	0.550	3.127	3.748	**4615US31203125-500**
3.250	3.750	0.413	3.251	3.749	**4615US25003250-375**
3.250	4.000	0.413	3.252	3.998	**4615US37503250-375**
3.250	4.000	0.481	3.252	3.998	**4615US37503250-437**
3.250	4.000	0.688	3.252	3.998	**4615US37503250-625**

*If used with wear rings, refer to wear ring throat diameter, see Section 9.
**If used with wear rings, refer to wear ring piston diameter, see Section 9.
For custom groove calculations, see Appendix C.

Parker Hannifin Corporation
Engineered Polymer Systems Division
Phone: 801 972 3000

Table 6-14. US Gland Dimensions — Inch (Continued)

A	B	C	D		Part Number
Rod Diameter	(Rod) Groove Diameter	(Rod) Groove Width	Throat Diameter*		
(Bore) Groove Diameter	Bore Diameter	(Bore) Groove Width		(Bore) Piston Diameter**	
3.500	3.875	0.413	3.501	3.874	**4615US18703500-375**
3.500	4.000	0.413	3.501	3.999	**4615US25003500-375**
3.625	4.000	0.206	3.626	3.999	**4615US18703625-187**
3.625	4.000	0.275	3.626	3.999	**4615US18703625-250**
3.625	4.000	0.413	3.626	3.999	**4615US18703625-375**
3.750	4.250	0.413	3.751	4.249	**4615US25003750-375**
3.750	4.500	0.413	3.752	4.498	**4615US37503750-375**
3.875	4.500	0.550	3.877	4.498	**4615US31203875-500**
4.000	4.375	0.413	4.001	4.374	**4615US18704000-375**
4.000	4.500	0.413	4.001	4.499	**4615US25004000-375**
4.000	4.750	0.550	4.002	4.748	**4615US37504000-500**
4.000	4.750	0.688	4.002	4.748	**4615US37504000-625**
4.000	5.000	0.688	4.002	4.998	**4615US50004000-625**
4.250	4.750	0.618	4.251	4.749	**4615US25004250-562**
4.250	5.000	0.413	4.252	4.998	**4615US37504250-375**
4.250	5.000	0.550	4.252	4.998	**4615US37504250-500**
4.250	5.000	0.688	4.252	4.998	**4615US37504250-625**
4.250	5.500	0.825	4.253	5.497	**4615US62504250-750**
4.375	5.000	0.413	4.377	4.998	**4615US31204375-375**
4.375	5.000	0.618	4.377	4.998	**4615US31204375-562**
4.500	5.000	0.413	4.501	4.999	**4615US25004500-375**
4.500	5.000	0.618	4.501	4.999	**4615US25004500-562**
4.500	5.250	0.550	4.502	5.248	**4615US37504500-500**
4.750	5.000	0.206	4.751	4.999	**4615US12504750-187**
4.750	5.500	0.688	4.752	5.498	**4615US37504750-625**
5.000	5.375	0.413	5.001	5.374	**4615US18705000-375**
5.000	5.500	0.413	5.001	5.499	**4615US25005000-375**
5.000	5.750	0.550	5.002	5.748	**4615US37505000-500**
5.250	6.000	0.413	5.252	5.998	**4615US37505250-375**
5.250	6.500	0.825	5.253	6.497	**4615US62505250-750**
5.375	6.000	0.413	5.377	5.998	**4615US31205375-375**
5.375	6.000	0.656	5.377	5.998	**4615US31205375-596**
5.375	6.000	0.688	5.377	5.998	**4615US31205375-625**
5.500	5.875	0.413	5.501	5.874	**4615US18705500-375**
5.500	6.000	0.413	5.501	5.999	**4615US25005500-375**
5.750	6.250	0.618	5.751	6.249	**4615US25005750-562**
5.750	6.500	0.550	5.752	6.498	**4615US37505750-500**
6.000	6.500	0.618	6.001	6.499	**4615US25006000-562**

*If used with wear rings, refer to wear ring throat diameter, see Section 9.
**If used with wear rings, refer to wear ring piston diameter, see Section 9.
For custom groove calculations, see Appendix C.

Parker Hannifin Corporation
Engineered Polymer Systems Division
Phone: 801 972 3000

Table 6-14. US Gland Dimensions — Inch (Continued)

A	B	C	D		Part Number
Rod Diameter	(Rod) Groove Diameter	(Rod) Groove Width	Throat Diameter*		
(Bore) Groove Diameter	Bore Diameter	(Bore) Groove Width		(Bore) Piston Diameter**	
6.250	7.000	0.413	6.252	6.998	**4615US37506250-375**
6.250	7.000	0.688	6.252	6.998	**4615US37506250-625**
6.500	7.000	0.618	6.501	6.999	**4615US25006500-562**
6.750	7.500	0.550	6.752	7.498	**4615US37506750-500**
7.000	8.000	0.825	7.002	7.998	**4615US50007000-750**
7.250	8.000	0.688	7.252	7.998	**4615US37507250-625**
7.375	8.000	0.343	7.377	7.998	**4615US31207375-312**
7.500	8.000	0.275	7.501	7.999	**4615US25007500-250**
7.500	8.000	0.618	7.501	7.999	**4615US25007500-562**
7.500	8.250	0.550	7.502	8.248	**4615US37507500-500**

*If used with wear rings, refer to wear ring throat diameter, see Section 9.
**If used with wear rings, refer to wear ring piston diameter, see Section 9.
For custom groove calculations, see Appendix C.

NOTE: For sizes larger than those shown in the table, please contact your local Parker Seal representative.

Parker Hannifin Corporation
Engineered Polymer Systems Division
Phone: 801 972 3000

Symmetrical Seals
8400 and 8500 Profiles

8400 Cross-Section

8500 Cross-Section

8400 Profile, Light Load U-cup with Beveled Lips; 8500 Profile, Light Load U-cup with Scraper Lips

Parker's 8400 and 8500 Series u-cups are symmetrical lip seals for use in either rod or piston sealing applications. The thin, flexible lip design reacts to low pressure and provides an extremely smooth, steady movement with less break away force required because of the inherent low friction. Both the 8400 and 8500 u-cups are produced from the same molds. The 8400 style utilizes a beveled lip, ideal for wiping fluid film, while the 8500 design utilizes a flat, scraper lip that yields additional lip interference and wipes contamination away from the sealing edge. Both u-cup profiles are available in a variety of rubber compounds to cover a wide range of applications. While the 8400 and 8500 u-cups are primarily designed for pneumatic applications, they can also be used in low to medium pressure hydraulic applications. The pressure range of the u-cups may be extended by incorporating an 8700 back-up ring.

Technical Data

Standard Materials*	Temperature Range	Pressure Range†	Surface Speed
N4180A80	-40°F to 250°F (-40°C to 121°C)	1,250 psi (86 bar)	< 1.6 ft/s (0.5 m/s)
N4274A85	-10°F to 250°F (-23°C to 121°C)	1,750 psi (120 bar)	< 1.6 ft/s (0.5 m/s)
V4208A90	-5°F to 400°F (-21°C to 204°C)	2,000 psi (137 bar)	< 1.6 ft/s (0.5 m/s)
E4259A80	-65°F to 300°F (-54°C to 149°C)	1,750 psi (120 bar)	< 1.6 ft/s (0.5 m/s)

***Alternate Materials:** For applications that may require an alternate material, please contact your local Parker Seal representative.

†Pressure Range without wear rings (see Table 2-4, page 2-5).

8400 installed in Rod Gland

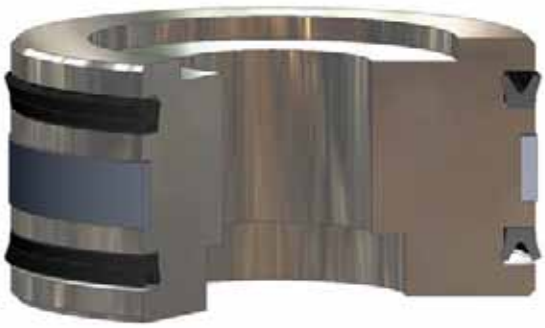

8400 installed in Piston Gland

Parker Hannifin Corporation
Engineered Polymer Systems Division
Phone: 801 972 3000

Part Number Nomenclature — 8400 Profile

Table 6-15. 8400 Profile — Inch

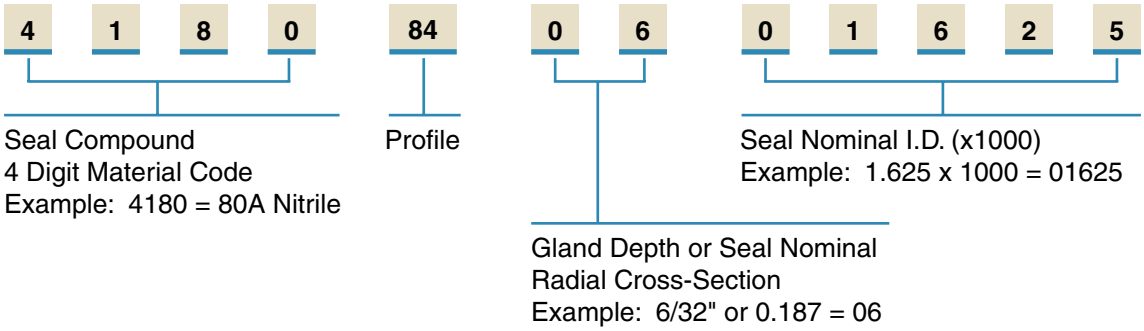

Part Number Nomenclature — 8500 Profile

Table 6-16. 8500 Profile — Inch

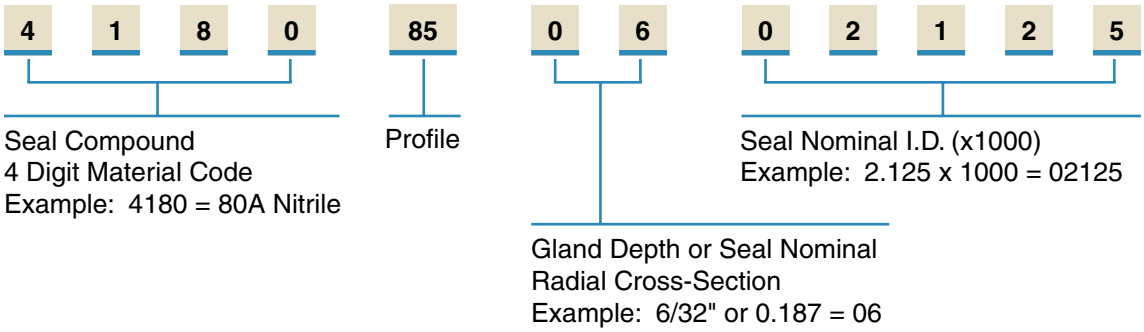

Parker Hannifin Corporation
Engineered Polymer Systems Division
Phone: 801 972 3000

Gland Dimensions — 8400 and 8500 Profiles

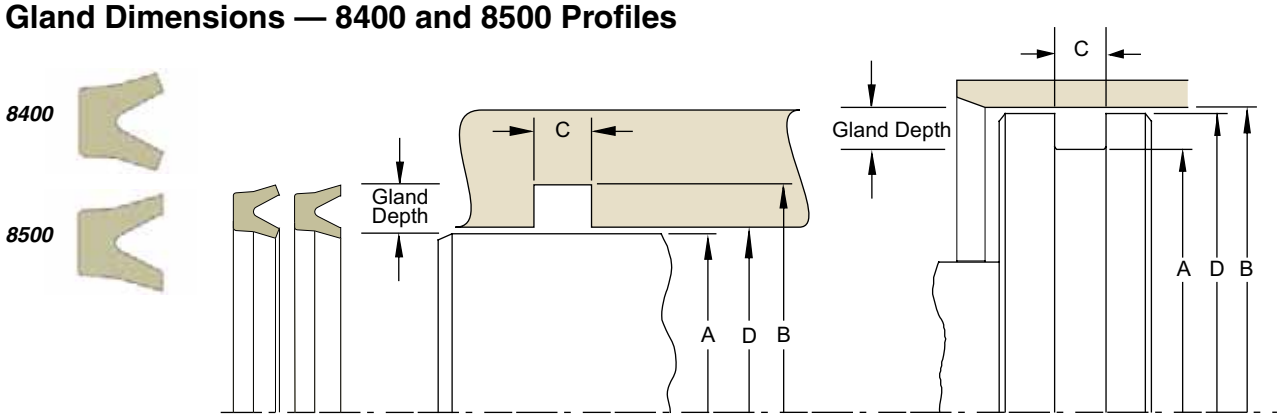

Table 6-17A. Rod Gland Dimension Tolerances

Nominal Gland Depth	A Rod Diameter	B Groove Diameter	C Groove Width	D Throat Diameter
1/8	+.000/-.001	+.002/-.000	+.015/-.000	+.002/-.000
3/16	+.000/-.002	+.002/-.000		+.002/-.000
1/4	+.000/-.002	+.003/-.000		+.003/-.000
5/16	+.000/-.002	+.004/-.000		+.003/-.000
3/8	+.000/-.002	+.005/-.000		+.004/-.000
7/16	+.000/-.003	+.006/-.000		+.004/-.000
1/2	+.000/-.003	+.007/-.000		+.005/-.000
5/8	+.000/-.003	+.009/-.000		+.006/-.000
3/4	+.000/-.004	+.011/-.000		+.007/-.000
1	+.000/-.005	+.015/-.000		+.009/-.000

Please refer to Engineering Section 2, page 2-8 for surface finish and additional hardware considerations.

Table 6-17B. Piston Gland Dimension Tolerances

Nominal Gland Depth	B Bore Diameter	A Groove Diameter	C Groove Width	D Piston Diameter
1/8	+.002/-.000	+.000/-.002	+.015/-.000	+.000/-.001
3/16	+.002/-.000	+.000/-.002		+.000/-.002
1/4	+.003/-.000	+.000/-.003		+.000/-.002
5/16	+.003/-.000	+.000/-.004		+.000/-.002
3/8	+.004/-.000	+.000/-.005		+.000/-.002
7/16	+.005/-.000	+.000/-.006		+.000/-.002
1/2	+.005/-.000	+.000/-.007		+.000/-.003
9/16	+.006/-.000	+.000/-.008		+.000/-.003
5/8	+.006/-.000	+.000/-.009		+.000/-.003
3/4	+.007/-.000	+.000/-.010		+.000/-.004
7/8	+.008/-.000	+.000/-.011		+.000/-.005
1	+.009/-.000	+.000/-.012		+.000/-.005

Table 6-18. 8400 and 8500 Gland Dimensions — Inch

A	B	C	D	E	Compound Code (X = Standard Offering)				Part Number		
Rod Diameter	(Rod) Groove Diameter	(Rod) Groove Width	Throat Diameter*						Compound Code	Profile Code 84 or 85	
(Bore) Groove Diameter	Bore Diameter	(Bore) Groove Width		(Bore) Piston Diameter**	4180	4274	4208	4259			
0.125	0.250	0.093	0.126	0.249	X	X	X	X	**XXXX**	**8x**	**0200125**
0.156	0.343	0.125	0.157	0.342			X		**XXXX**	**8x**	**0300156**
0.187	0.312	0.093	0.188	0.311	X	X	X	X	**XXXX**	**8x**	**0200187**
0.187	0.375	0.125	0.188	0.374	X	X	X	X	**XXXX**	**8x**	**0300187**
0.187	0.437	0.156	0.188	0.436		X	X	X	**XXXX**	**8x**	**0400187**
0.250	0.375	0.093	0.251	0.374	X	X	X	X	**XXXX**	**8x**	**0200250**
0.250	0.437	0.125	0.251	0.436	X	X	X		**XXXX**	**8x**	**0300250**
0.250	0.500	0.156	0.251	0.499		X	X	X	**XXXX**	**8x**	**0400250**
0.312	0.500	0.125	0.313	0.499	X	X	X	X	**XXXX**	**8x**	**0300312**
0.312	0.562	0.156	0.313	0.561	X	X	X	X	**XXXX**	**8x**	**0400312**

*If used with wear rings, refer to wear ring throat diameter, see Section 9.
**If used with wear rings, refer to wear ring piston diameter, see Section 9.
For custom groove calculations, see Appendix C.

09/01/07

Parker Hannifin Corporation
Engineered Polymer Systems Division
Phone: 801 972 3000

Table 6-18. 8400 and 8500 Gland Dimensions — Inch (Continued)

A	B	C	D	E	Compound Code (X = Standard Offering)				Part Number		
Rod Diameter	(Rod) Groove Diameter	(Rod) Groove Width	Throat Diameter*						Compound Code	Profile Code 84 or 85	
(Bore) Groove Diameter	Bore Diameter	(Bore) Groove Width		(Bore) Piston Diameter**	4180	4274	4208	4259			
0.375	0.500	0.093	0.376	0.499			X		XXXX	8x	0200375
0.375	0.625	0.156	0.376	0.624		X	X	X	XXXX	8x	0400375
0.437	0.687	0.156	0.438	0.686	X	X	X	X	XXXX	8x	0400437
0.500	0.750	0.156	0.501	0.749	X	X	X	X	XXXX	8x	0400500
0.562	0.812	0.156	0.563	0.811	X	X	X		XXXX	8x	0400562
0.625	0.812	0.125	0.626	0.811	X	X			XXXX	8x	0300625
0.625	0.875	0.156	0.626	0.874	X	X	X	X	XXXX	8x	0400625
0.687	0.937	0.156	0.688	0.936	X				XXXX	8x	0400687
0.687	1.000	0.188	0.688	0.999	X				XXXX	8x	0500687
0.750	1.000	0.156	0.751	0.999	X	X	X	X	XXXX	8x	0400750
0.750	1.125	0.218	0.751	1.124	X	X			XXXX	8x	0600750
0.812	1.062	0.156	0.813	1.061	X	X	X	X	XXXX	8x	0400812
0.875	1.125	0.156	0.876	1.124	X	X	X	X	XXXX	8x	0400875
0.875	1.250	0.218	0.876	1.249	X	X			XXXX	8x	0600875
0.937	1.187	0.156	0.938	1.186	X	X	X		XXXX	8x	0400937
0.937	1.250	0.188	0.938	1.249	X	X	X		XXXX	8x	0500937
1.000	1.250	0.156	1.001	1.249	X	X	X	X	XXXX	8x	0401000
1.000	1.312	0.188	1.001	1.311	X	X	X	X	XXXX	8x	0501000
1.000	1.375	0.218	1.002	1.374		X		X	XXXX	8x	0601000
1.000	1.500	0.281	1.001	1.499	X	X	X	X	XXXX	8x	0801000
1.062	1.375	0.188	1.063	1.374	X	X	X	X	XXXX	8x	0501062
1.125	1.375	0.156	1.126	1.374	X	X	X	X	XXXX	8x	0401125
1.125	1.437	0.188	1.126	1.436	X				XXXX	8x	0501125
1.187	1.500	0.188	1.188	1.499	X	X	X	X	XXXX	8x	0501187
1.250	1.500	0.156	1.251	1.499	X				XXXX	8x	0401250
1.250	1.562	0.188	1.251	1.561	X	X	X	X	XXXX	8x	0501250
1.312	1.625	0.188	1.313	1.624	X	X	X	X	XXXX	8x	0501312
1.375	1.687	0.188	1.376	1.686	X	X	X		XXXX	8x	0501375
1.375	1.750	0.218	1.377	1.749	X	X	X	X	XXXX	8x	0601375
1.437	1.750	0.188	1.438	1.749	X				XXXX	8x	0501437
1.500	1.812	0.188	1.501	1.811	X	X	X		XXXX	8x	0501500
1.500	1.875	0.218	1.502	1.874	X		X	X	XXXX	8x	0601500
1.625	2.000	0.218	1.627	1.999	X	X	X	X	XXXX	8x	0601625
1.687	2.062	0.218	1.689	2.061			X		XXXX	8x	0601687
1.750	2.000	0.156	1.751	1.999	X		X		XXXX	8x	0401750
1.750	2.125	0.218	1.752	2.124	X	X	X	X	XXXX	8x	0601750
1.875	2.250	0.218	1.877	2.249	X	X	X	X	XXXX	8x	0601875
1.937	2.375	0.250	1.938	2.374	X		X		XXXX	8x	0701937

*If used with wear rings, refer to wear ring throat diameter, see Section 9.
**If used with wear rings, refer to wear ring piston diameter, see Section 9.
For custom groove calculations, see Appendix C.

Parker Hannifin Corporation
Engineered Polymer Systems Division
Phone: 801 972 3000

Table 6-18. 8400 and 8500 Gland Dimensions — Inch (Continued)

A	B	C	D	E	Compound Code (X = Standard Offering)				Part Number		
Rod Diameter	(Rod) Groove Diameter	(Rod) Groove Width	Throat Diameter*						Compound Code	Profile Code 84 or 85	
(Bore) Groove Diameter	Bore Diameter	(Bore) Groove Width		(Bore) Piston Diameter**	4180	4274	4208	4259			
2.000	2.375	0.218	2.002	2.374	X	X	X	X	**XXXX**	**8x**	**0602000**
2.125	2.500	0.218	2.127	2.499	X	X	X	X	**XXXX**	**8x**	**0602125**
2.250	2.625	0.218	2.252	2.624	X	X	X		**XXXX**	**8x**	**0602250**
2.250	3.000	0.406	2.252	2.998	X				**XXXX**	**8x**	**1202250**
2.375	2.750	0.218	2.377	2.749	X	X	X		**XXXX**	**8x**	**0602375**
2.375	3.000	0.344	2.377	2.998	X	X			**XXXX**	**8x**	**1002375**
2.437	2.937	0.281	2.438	2.936		X			**XXXX**	**8x**	**0802437**
2.500	2.875	0.218	2.502	2.874	X	X	X	X	**XXXX**	**8x**	**0602500**
2.500	2.937	0.250	2.501	2.936	X	X	X	X	**XXXX**	**8x**	**0702500**
2.500	3.000	0.281	2.501	2.999	X				**XXXX**	**8x**	**0802500**
2.562	3.000	0.250	2.563	2.999	X	X	X	X	**XXXX**	**8x**	**0702562**
2.625	3.000	0.218	2.627	2.999	X		X	X	**XXXX**	**8x**	**0602625**
2.687	3.125	0.250	2.688	3.124	X				**XXXX**	**8x**	**0702687**
2.750	3.125	0.218	2.752	3.124	X		X	X	**XXXX**	**8x**	**0602750**
2.750	3.187	0.250	2.751	3.186	X				**XXXX**	**8x**	**0702750**
2.750	3.250	0.281	2.751	3.249	X				**XXXX**	**8x**	**0802750**
2.812	3.250	0.250	2.813	3.249	X	X	X		**XXXX**	**8x**	**0702812**
2.875	3.250	0.218	2.877	3.249	X				**XXXX**	**8x**	**0602875**
3.000	3.375	0.218	3.002	3.374	X	X	X	X	**XXXX**	**8x**	**0603000**
3.000	3.437	0.250	3.001	3.436	X	X	X	X	**XXXX**	**8x**	**0703000**
3.062	3.500	0.250	3.063	3.499	X	X	X	X	**XXXX**	**8x**	**0703062**
3.375	3.875	0.281	3.376	3.874	X				**XXXX**	**8x**	**0803375**
3.500	4.000	0.281	3.501	3.999	X	X	X	X	**XXXX**	**8x**	**0803500**
3.625	4.000	0.218	3.627	3.999	X				**XXXX**	**8x**	**0603625**
3.750	4.250	0.281	3.751	4.249	X	X	X		**XXXX**	**8x**	**0803750**
3.875	4.375	0.281	3.876	4.374		X			**XXXX**	**8x**	**0803875**
4.000	4.250	0.156	4.001	4.249	X				**XXXX**	**8x**	**0404000**
4.000	4.500	0.281	4.001	4.499	X		X	X	**XXXX**	**8x**	**0804000**
4.250	4.750	0.281	4.251	4.749	X	X	X		**XXXX**	**8x**	**0804250**
4.437	5.000	0.312	4.438	4.999	X	X	X	X	**XXXX**	**8x**	**0904437**
4.500	5.000	0.281	4.501	4.999	X	X	X	X	**XXXX**	**8x**	**0804500**
4.750	5.250	0.281	4.751	5.249	X		X		**XXXX**	**8x**	**0804750**
5.000	5.562	0.312	5.001	5.561	X	X	X		**XXXX**	**8x**	**0905000**
5.125	5.750	0.344	5.127	5.748	X				**XXXX**	**8x**	**1005125**
5.375	6.000	0.344	5.377	5.998	X	X	X	X	**XXXX**	**8x**	**1005375**
5.437	6.000	0.312	5.438	5.999	X	X	X	X	**XXXX**	**8x**	**0905437**
5.500	6.125	0.344	5.502	6.123	X	X	X	X	**XXXX**	**8x**	**1005500**
5.937	6.500	0.312	5.938	6.499	X	X			**XXXX**	**8x**	**0905937**

*If used with wear rings, refer to wear ring throat diameter, see Section 9.
**If used with wear rings, refer to wear ring piston diameter, see Section 9.
For custom groove calculations, see Appendix C.

Parker Hannifin Corporation
Engineered Polymer Systems Division
Phone: 801 972 3000

Table 6-18. 8400 and 8500 Gland Dimensions — Inch (Continued)

A	B	C	D	E	Compound Code (X = Standard Offering)				Part Number		
Rod Diameter	(Rod) Groove Diameter	(Rod) Groove Width	Throat Diameter*						Compound Code	Profile Code 84 or 85	
(Bore) Groove Diameter	Bore Diameter	(Bore) Groove Width		(Bore) Piston Diameter**	4180	4274	4208	4259			
6.000	6.625	0.344	6.002	6.623	X	X			**XXXX**	**8x**	**1006000**
6.375	7.000	0.344	6.377	6.998	X	X	X		**XXXX**	**8x**	**1006375**
6.437	7.000	0.312	6.438	6.999	X				**XXXX**	**8x**	**0906437**
6.969	7.593	0.344	6.971	7.591	X			X	**XXXX**	**8x**	**1006969**
7.000	7.625	0.344	7.002	7.623	X		X	X	**XXXX**	**8x**	**1007000**
7.375	8.000	0.344	7.377	7.998	X	X	X	X	**XXXX**	**8x**	**1007375**
7.750	8.375	0.344	7.752	8.373	X				**XXXX**	**8x**	**1007750**
8.500	9.125	0.344	8.502	9.123	X			X	**XXXX**	**8x**	**1008500**
9.000	9.750	0.406	9.002	9.748			X		**XXXX**	**8x**	**1209000**
9.312	10.000	0.375	9.314	9.998	X	X	X		**XXXX**	**8x**	**1109312**
11.000	11.750	0.406	11.002	11.748					**XXXX**	**8x**	**1211000**
11.000	12.000	0.531	11.002	11.998	X				**XXXX**	**8x**	**1611000**
11.250	12.000	0.406	11.252	11.998	X		X	X	**XXXX**	**8x**	**1211250**
13.000	14.000	0.531	13.002	13.998	X	X	X	X	**XXXX**	**8x**	**1613000**
13.187	14.000	0.437	13.189	13.998	X	X	X		**XXXX**	**8x**	**1313187**
17.125	18.000	0.469	17.127	17.998	X				**XXXX**	**8x**	**1417125**

*If used with wear rings, refer to wear ring throat diameter, see Section 9.
**If used with wear rings, refer to wear ring piston diameter, see Section 9.
For custom groove calculations, see Appendix C.

NOTE: For sizes larger than those shown in the table, please contact your local Parker Seal representative.

Parker Hannifin Corporation
Engineered Polymer Systems Division
Phone: 801 972 3000

Symmetrical Seal AN6226 Profile

AN6226 Profile, Industrial, Standard, Light Load Rubber U-cups

Parker's AN6226 Style u-cups have a square format where the nominal cross section is equal to the height. Although widely used in the fluid power industry for low friction pneumatics, this profile was originally designed for early aircraft and ordnance service. Many units still use this type u-cup. The AN6226 profile is available in the most popular sizes and is made of a standard 70 Shore A nitrile compound.

Technical Data

Standard Materials*	Temperature Range	Pressure Range†	Surface Speed
N4295A70	-40°F to 250°F (-40°C to 121°C)	800 psi (55 bar)	< 1.6 ft/s (0.5 m/s)

***Alternate Materials:** For applications that may require an alternate material, please contact your local Parker Seal representative.

†Pressure Range without wear rings (see Table 2-4, page 2-5).

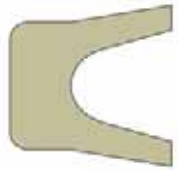

AN6226 Cross-Section

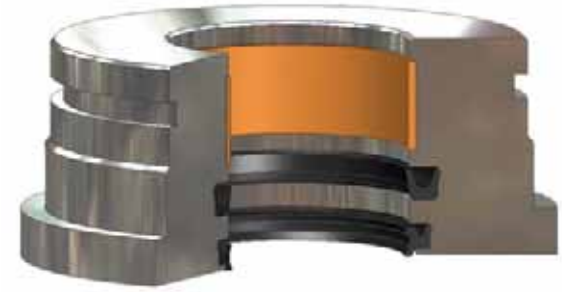

AN6226 installed in Rod Gland

AN6226 installed in Piston Gland

Parker Hannifin Corporation
Engineered Polymer Systems Division
Phone: 801 972 3000

Part Number Nomenclature — AN6226 Profile

Table 6-19. AN6226 Profile — Inch

4	2	9	5	6226	-	3	1

Seal Compound
4 Digit Material Code
Example: 4295 = 70A Nitrile

Profile

Size Identifier
Example: 2" x 2-5/8" x 5/16" = 31

Gland Dimensions — AN6226 Profile

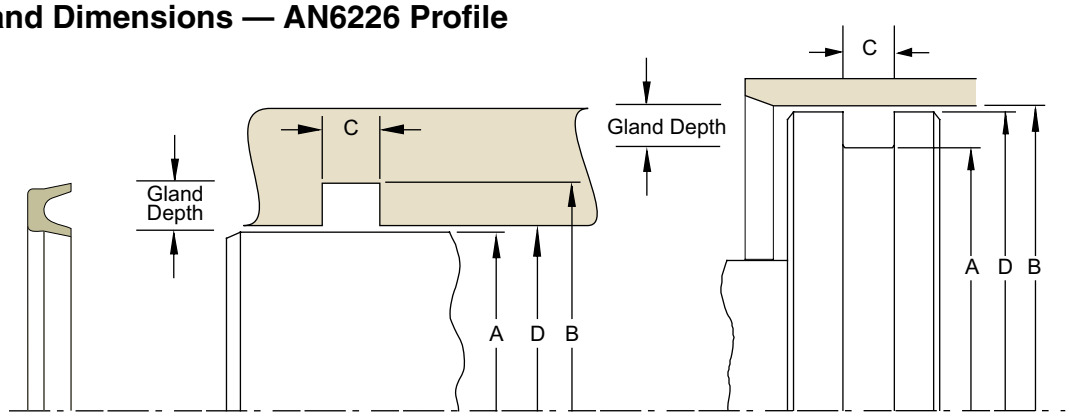

6

Table 6-20A. Rod Gland Dimension Tolerances

Nominal Gland Depth	A Rod Diameter	B Groove Diameter	C Groove Width	D Throat Diameter
1/8	+.000/-.001	+.002/-.000	+.010/-.010	+.002/-.000
3/16	+.000/-.001	+.002/-.000		+.002/-.000
1/4	+.000/-.002	+.003/-.000		+.003/-.000
5/16	+.000/-.002	+.004/-.000		+.004/-.000
3/8	+.000/-.002	+.005/-.000		+.004/-.000

Table 6-20B. Piston Gland Dimension Tolerances

Nominal Gland Depth	B Bore Diameter	A Groove Diameter	C Groove Width	D Piston Diameter
1/8	+.003/-.000	+.000/-.001	+.010/-.010	+.000/-.001
3/16	+.003/-.000	+.000/-.002		+.000/-.001
1/4	+.003/-.000	+.000/-.003		+.000/-.001
5/16	+.003/-.000	+.000/-.004		+.000/-.002
3/8	+.004/-.000	+.000/-.005		+.000/-.002

Please refer to Engineering Section 2, page 2-8 for surface finish and additional hardware considerations.

Table 6-21. AN6226 Gland Dimensions — Inch

A	B	C	D	E	Part Number
Rod Diameter	(Rod) Groove Diameter	(Rod) Groove Width	Throat Diameter*		
(Bore) Groove Diameter	Bore Diameter	(Bore) Groove Width		(Bore) Piston Diameter**	
0.125	0.500	0.218	0.126	0.498	**42956226-01**
0.187	0.562	0.218	0.188	0.560	**42956226-02**
0.250	0.625	0.218	0.251	0.623	**42956226-03**
0.312	0.687	0.218	0.313	0.685	**42956226-04**
0.375	0.750	0.218	0.376	0.748	**42956226-05**
0.437	0.812	0.218	0.438	0.810	**42956226-06**
0.500	0.875	0.218	0.501	0.873	**42956226-07**
0.250	0.750	0.281	0.251	0.748	**42956226-08**

*If used with wear rings, refer to wear ring throat diameter, see Section 9.
**If used with wear rings, refer to wear ring piston diameter, see Section 9.
For custom groove calculations, see Appendix C.

09/01/07

Parker Hannifin Corporation
Engineered Polymer Systems Division
Phone: 801 972 3000

Table 6-21. AN6226 Gland Dimensions — Inch (Continued)

A	B	C	D	E	Part Number
Rod Diameter	(Rod) Groove Diameter	(Rod) Groove Width	Throat Diameter*		
(Bore) Groove Diameter	Bore Diameter	(Bore) Groove Width		(Bore) Piston Diameter**	
0.312	0.812	0.281	0.313	0.810	**42956226-09**
0.375	0.875	0.281	0.376	0.873	**42956226-10**
0.437	0.937	0.281	0.438	0.935	**42956226-11**
0.500	1.000	0.281	0.501	0.998	**42956226-12**
0.562	1.062	0.281	0.563	1.060	**42956226-13**
0.625	1.125	0.281	0.626	1.123	**42956226-14**
0.687	1.187	0.281	0.688	1.185	**42956226-15**
0.750	1.250	0.281	0.751	1.248	**42956226-16**
0.812	1.312	0.281	0.813	1.310	**42956226-17**
0.875	1.375	0.281	0.876	1.373	**42956226-18**
0.937	1.437	0.281	0.938	1.435	**42956226-19**
1.000	1.500	0.281	1.001	1.498	**42956226-20**
1.062	1.562	0.281	1.063	1.560	**42956226-21**
1.125	1.625	0.281	1.126	1.623	**42956226-22**
1.187	1.687	0.281	1.188	1.685	**42956226-23**
1.250	1.750	0.281	1.251	1.748	**42956226-24**
1.250	1.875	0.344	1.252	1.873	**42956226-25**
1.375	2.000	0.344	1.377	1.998	**42956226-26**
1.500	2.125	0.344	1.502	2.123	**42956226-27**
1.625	2.250	0.344	1.627	2.248	**42956226-28**
1.750	2.375	0.344	1.752	2.373	**42956226-29**
1.875	2.500	0.344	1.877	2.498	**42956226-30**
2.000	2.625	0.344	2.002	2.623	**42956226-31**
2.125	2.750	0.344	2.127	2.748	**42956226-32**
2.250	2.875	0.344	2.252	2.873	**42956226-33**
2.375	3.000	0.344	2.377	2.998	**42956226-34**
2.500	3.125	0.344	2.502	3.123	**42956226-35**
2.500	3.250	0.406	2.502	3.248	**42956226-36**
2.625	3.375	0.406	2.627	3.373	**42956226-37**
2.750	3.500	0.406	2.752	3.498	**42956226-38**
2.875	3.625	0.406	2.877	3.623	**42956226-39**
3.000	3.750	0.406	3.002	3.748	**42956226-40**
0.125	0.375	0.156	0.126	0.373	**42956226-41**
0.187	0.437	0.156	0.188	0.435	**42956226-42**
0.250	0.500	0.156	0.251	0.498	**42956226-43**
0.312	0.562	0.156	0.313	0.560	**42956226-44**
0.375	0.625	0.156	0.376	0.623	**42956226-45**
0.437	0.687	0.156	0.438	0.685	**42956226-46**
0.500	0.750	0.156	0.501	0.748	**42956226-47**
0.625	1.000	0.218	0.626	0.998	**42956226-48**

*If used with wear rings, refer to wear ring throat diameter, see Section 9.
**If used with wear rings, refer to wear ring piston diameter, see Section 9.
For custom groove calculations, see Appendix C.

09/01/07

Parker Hannifin Corporation
Engineered Polymer Systems Division
Phone: 801 972 3000

Table 6-21. AN6226 Gland Dimensions — Inch (Continued)

A	B	C	D	E	Part Number
Rod Diameter	(Rod) Groove Diameter	(Rod) Groove Width	Throat Diameter*		
(Bore) Groove Diameter	Bore Diameter	(Bore) Groove Width		(Bore) Piston Diameter**	
0.750	1.125	0.218	0.751	1.123	**42956226-49**
0.875	1.250	0.218	0.876	1.248	**42956226-50**
1.000	1.375	0.218	1.001	1.373	**42956226-51**
1.125	1.500	0.218	1.126	1.498	**42956226-52**
1.250	1.625	0.218	1.251	1.623	**42956226-53**

*If used with wear rings, refer to wear ring throat diameter, see Section 9.
**If used with wear rings, refer to wear ring piston diameter, see Section 9.
For custom groove calculations, see Appendix C.

NOTE: For sizes larger than those shown in the table, please contact your local Parker Seal representative.

Parker Hannifin Corporation
Engineered Polymer Systems Division
Phone: 801 972 3000

Symmetrical Seal Spiral Vee Profile

Spiral Vee Rings, Cut to Size Chevron Packing

Parker Spiral Vee rings are precision formed rubber and combination rubber/fabric sealing products designed to protect equipment from leakage and costly down time. Parker Spiral Vee rings are designed to work in combination with adapters and shims. Adapters, which typically consist of rubber and plastic rings, are fitted to the top and/or bottom of the Vee ring stack to enhance sealing performance and prohibit extrusion. Rectangular cross-section discs, or “shims,” are used to adjust the height of the Vee ring stack set to pre-existing groove depths. Spiral Vee rings, adapters and shims are engineered for use in rams and plungers, presses, forging hammers and other hydraulic applications. Also included are refuse trucks and telescoping systems that require consistent, cost-effective sealing. These products contribute to the safe and reliable operation of equipment in chemical processing, energy/oilfield and other industries. To ensure compatibility with the many organic (petroleum-based) and synthetic fluids used in hydraulic applications, Parker offers its Spiral Vee ring products, adapters and shims in a wide range of compounds.

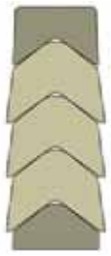

Spiral Vee Cross-Section

Spiral Vee installed in Rod Gland

Spiral Vee installed in Piston Gland

Parker Hannifin Corporation
Engineered Polymer Systems Division
Phone: 801 972 3000

Technical Data — Materials Matrix*†

Table 6-22. Material Codes

Vee Set Material Code	Adapters		Middle Rings	
	Description	Temperature Rating	Description	Temperature Rating
4050	Fabric/Neoprene	-45°F to 250°F (-43°C to 121°C)	Fabric/Neoprene	-45°F to 250°F (-43°C to 121°C)
4051	Fabric/Neoprene	-45°F to 250°F (-43°C to 121°C)	Fabric/Neoprene/ Homogeneous NBR	-45°F to 250°F (-43°C to 121°C)
4052	Fabric/Neoprene	-45°F to 250°F (-43°C to 121°C)	Nitrile	-30°F to 250°F (-34°C to 121°C)
4053	Fabric/FKM	-25°F to 450°F (-32°C to 232°C)	Fabric/FKM	-25°F to 450°F (-32°C to 232°C)
4054	Fabric/FKM	-25°F to 450°F (-32°C to 232°C)	Fabric/FKM/ Homogeneous FKM	-25°F to 450°F (-32°C to 232°C)
4055	Fabric/FKM	-25°F to 450°F (-32°C to 232°C)	FKM	-25°F to 450°F (-32°C to 232°C)

***Note:** Independent of Material Codes in Section 3.
†Alternate Materials: For applications that may require an alternate material, please contact your local Parker Seal representative.

Table 6-23. Recommended Number of Middle Rings (Vees) per Set Based on Pressure

	Pressure			
	Up to 1,000 psi	1,000 to 2,000 psi	2,000 to 4,000 psi	4,000 to 6,000 psi
Minimum Number of Rings	3	4	5	6

Parker Hannifin Corporation
Engineered Polymer Systems Division
Phone: 801 972 3000

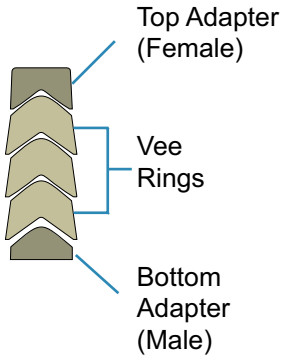

Part Number Nomenclature — Spiral Vee Profile

Table 6-24. Spiral Vee Profile — Inch

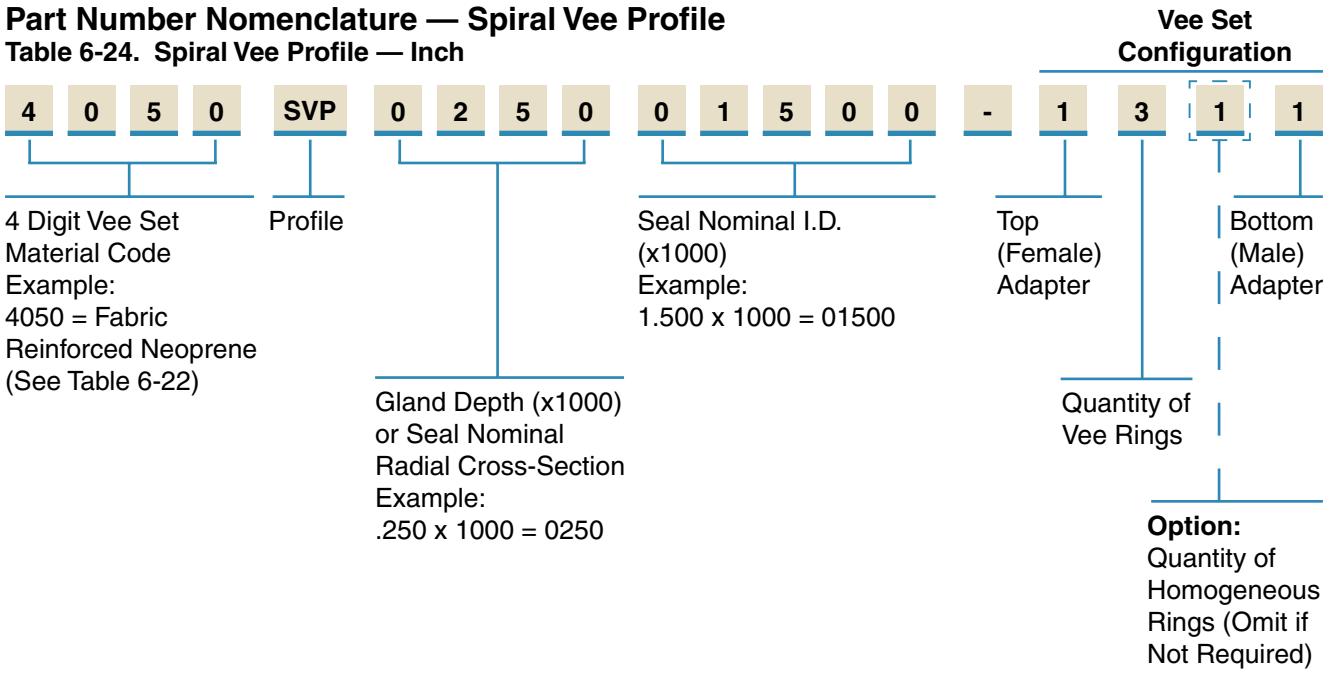

Steps in developing Spiral Vee part number:

1) Identify the material combination for the V-Packing Set from the material matrix.
2) SVP – Spiral V-Packing line callout.
3) Identify the nominal cross-section (0250 = .250").
4) Identify the nominal inner diameter (01500 = 1.50").
5) Identify the number and type of rings in the set:
   a) First digit is the number of top adapters (1 or 0).
   b) Second digit is the number of vees (as shown "3" = 3 vees).
   c) Number of homogeneous rubber vee rings. Omit if not required.
   d) Third digit is the number of bottom adapters (1 or 0).

Parker Hannifin Corporation
Engineered Polymer Systems Division
Phone: 801 972 3000

Bulk Length Availability — Spiral Vee Profile

Table 6-25. Spiral Vee Profile — Inch

Cross Section	Feet/ Spiral	I.D./ Range	Mandrel Sizes Available			
0.375"	49'	I.D.	6"	10"	16"	20"
		Range	4"-8"	8.1"-14"	14.1"-21"	21.1"+
0.500"	46'	I.D.	6"	12"	16"	20"
		Range	5"-10"	10.1"-16"	16.1"-23"	23.1"+
0.625"	62'	I.D.	6"	12"	18"	20"
		Range	6"-11"	11.1"-17"	17.1"-22"	22.1"+
0.750"	62'	I.D.	10"	12"	18"	20"
		Range	9"-12"	12.1"-16"	16.1-23"	23.1"+
.0875"	62'	I.D.		12"	16"	20"
		Range		11"-15"	15.1"-23"	23.1"+
1.000"	62'	I.D.			16"	20"
		Range			14"-23"	23.1"+

Contact your local Parker Seal representative for price and availability of bulk length Spiral Vee.

Stack Height Calculation — Spiral Vee Profile

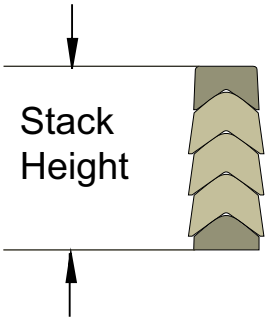

Table 6-26. Spiral Vee Dimensions — Inch

Cross-Section	Stack Height for Each Vee Ring		Height of Combined Top and Bottom Adapters	
Inches	Inches	Tolerance	Inches	Tolerance
0.375	0.220	±0.025	0.480	±0.030
0.500	0.300	±0.025	0.530	±0.030
0.625	0.370	±0.030	0.625	±0.030
0.750	0.405	±0.030	0.690	±0.030
0.875	0.500	±0.030	0.740	±0.030
1.000	0.540	±0.030	0.780	±0.030

NOTE: For sizes larger than those shown in the table, please contact your local Parker Seal representative.

Stack Height = (*[number of middle rings (Vees)]* X *[stack height for* ***each*** *vee ring (see Table 6-26)]*)
+ *[height of combined top and bottom adapters (see Table 6-26)]*

Example: 1-3-1 Vee Stack with 0.500" cross-section

Stack Height = ([3] X [.300])
(*[number of middle rings (Vees)]* X *[stack height for* ***each*** *vee ring (see Table 6-26)]*)

+ [.530]
+ *[height of combined top and bottom adapters (see Table 6-26)]*

= 1.430"

Parker Hannifin Corporation
Engineered Polymer Systems Division
Phone: 801 972 3000

Contents

Product Offering 7-2
Decision Tree 7-3
Piston Seal Profiles
BP 7-5
PSP 7-8
CC 7-11
OK 7-13
PIP..... 7-15
B7 7-19
UP 7-23
E4 7-26
BMP..... 7-29
TP 7-31
S5 7-35
R5 7-39
CT 7-43
CQ..... 7-48
OE 7-53
CP 7-62
OA 7-68
OQ..... 7-74

Piston Seal Profiles

Parker offers the most comprehensive range of piston seals in the market today. A variety of profiles such as lip seals, cap seals and squeeze seals are manufactured from proprietary rubber, thermoplastic and PTFE compounds to meet the broad demands of the fluid power industry. The highest quality materials and manufacturing processes are utilized to ensure the best performance possible. Parker's piston seal profiles are available for both uni-directional and bi-directional applications. When combined with wear rings, Parker piston seals have proven to provide long life and leak free performance.

Parker Hannifin Corporation
Engineered Polymer Systems Division
Phone: 801 972 3000

Profiles

Table 7-1: Product Profiles

Series	Description	Application (Duty)				Page
		Light	Medium	Heavy	Pneumatic	
BP	Premium TPU Cap Seal					7-5
PSP	TPU Piston Cap Seal					7-8
CC	High Pressure, Step Cut Cap Piston Seal					7-11
OK	High Pressure, Step Cut Cap Piston Seal					7-13
PIP	Loaded Lip Seal with Pressure Inverting Pedestal					7-15
B7	U-cup Piston Seal					7-19
UP	Industrial U-cup Piston Seal					7-23
E4	Premium Rounded Lip U-cup Piston Seal					7-26
BMP	Rounded Lip Seal with Bumper Cushion					7-29

Series	Description	Application (Duty)				Page
		Light	Medium	Heavy	Pneumatic	
TP	Compact Seal with Anti-Extrusion Technology					7-31
S5	Square PTFE Cap Seal					7-35
R5	Rectangular PTFE Cap Seal					7-39
CT	Premium PTFE Cap Seal with Anti-Extrusion Technology					7-43
CQ	Premium PTFE Cap Seal with Anti-Drift Technology					7-48
OE	PTFE Piston Cap Seal					7-53
CP	PTFE Piston Cap Seal to Retrofit O-ring Gland					7-62
OA	Compact PTFE Piston Cap Seal					7-68
OQ	Rotary PTFE Cap Seal					7-74

Parker Hannifin Corporation
Engineered Polymer Systems Division
Phone: 801 972 3000

Piston Seal Decision Tree

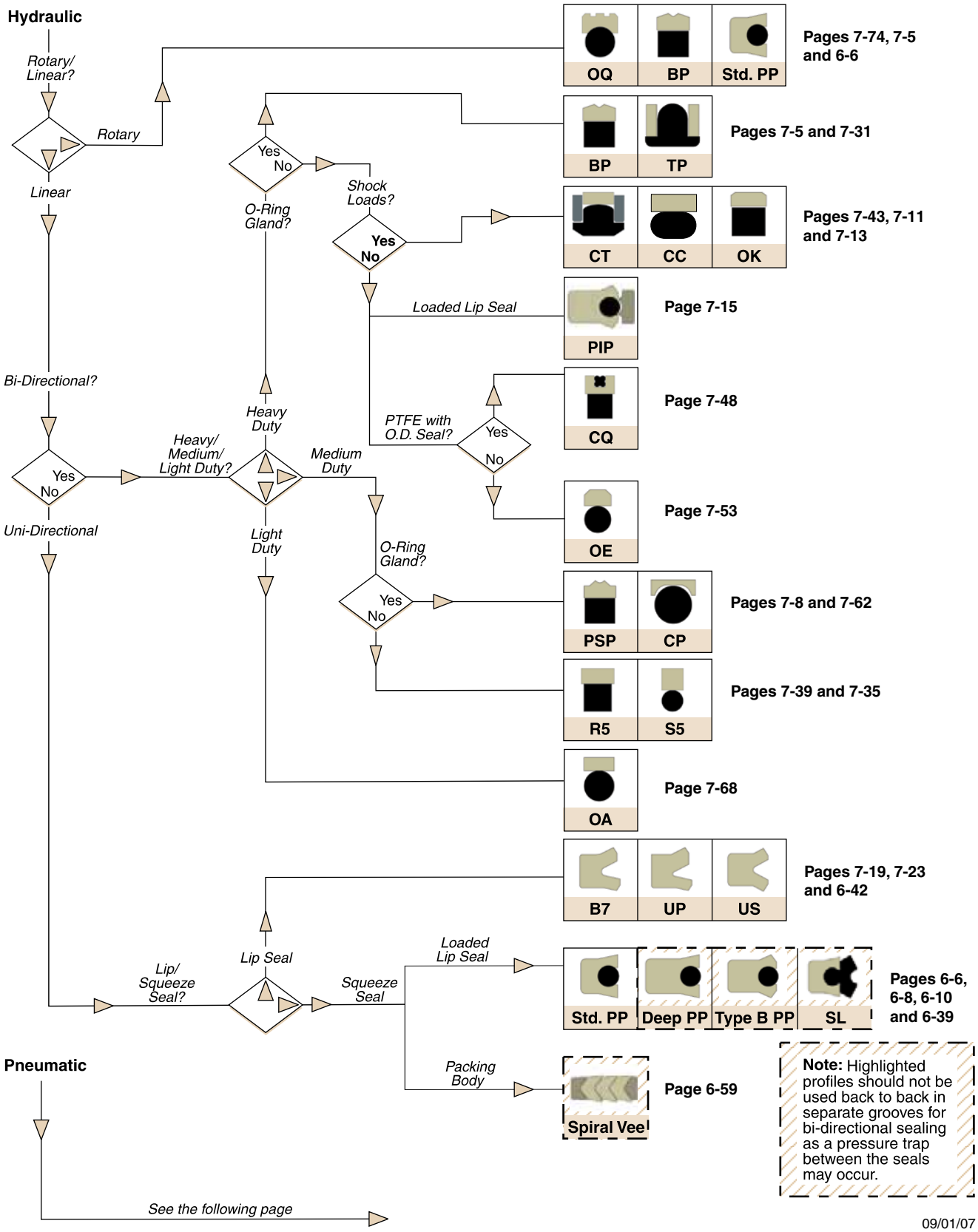

Note: Highlighted profiles should not be used back to back in separate grooves for bi-directional sealing as a pressure trap between the seals may occur.

09/01/07

Parker Hannifin Corporation
Engineered Polymer Systems Division
Phone: 801 972 3000

Piston Seal Decision Tree (Continued)

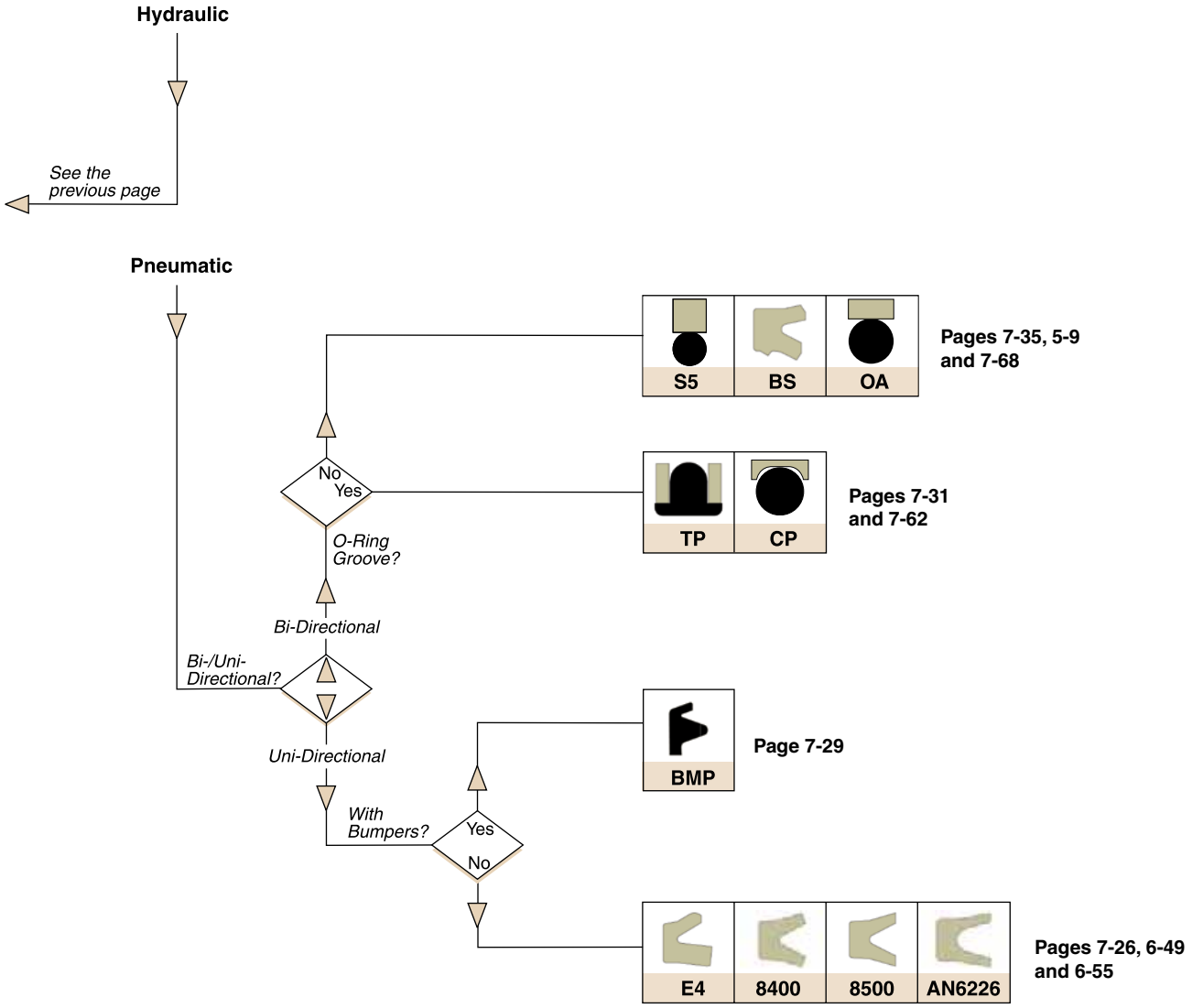

Parker Hannifin Corporation
Engineered Polymer Systems Division
Phone: 801 972 3000

BP Profile, Premium TPU Cap Seal

Parker's BP profile is a squeeze type, bi-directional piston seal for use in medium to heavy duty hydraulic applications. This seal is primarily designed for linear applications but has been successfully used as a low speed rotary seal. The standard material for this profile is Resilon ER, compound P4304. This is a proprietary Parker polyurethane offering higher wear resistance, extrusion resistance, and extended temperature range. The Resilon ER cap is energized using a resilient nitrile elastomer offering low compression set. The BP seal's geometry provides a fluid reservoir between the two sealing lips which holds system fluid, resulting in reduced breakaway and running friction. The BP is offered in two syles, standard and narrow, with the standard style designed to retrofit o-ring grooves. The BP profile is easy to install and will resist rolling and twisting in long stroke applications.

The BP profile is sold only as an assembly (seal and energizer). See part number nomenclature.

Technical Data

Standard Materials*		Temperature Range	Pressure Range†	Surface Speed
Cap				
P4304D60		-65°F to 275°F (-54°C to 135°C)	7,000 psi (482 bar)	< 1.6 ft/s (0.5 m/sec)
Energizer				
A	70A Nitrile	-30°F to 250°F (-34°C to 121°C)		

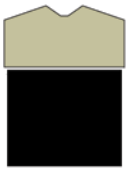

BP Cross-Section

***Alternate Materials:** For applications that may require an alternate material, please contact your local Parker Seal representative.

†**Pressure Range** without wear rings (see Table 2-4, page 2-5).

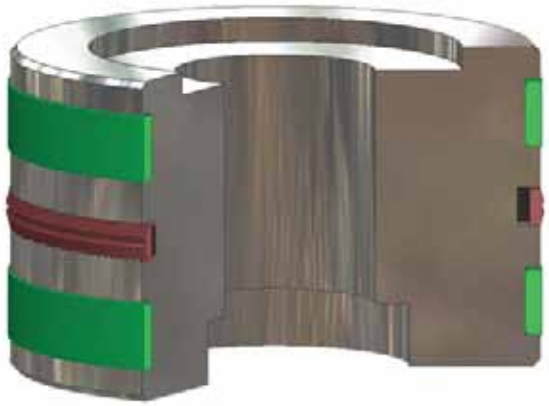

BP installed in Piston Gland

Parker Hannifin Corporation
Engineered Polymer Systems Division
Phone: 801 972 3000

Part Number Nomenclature — BP (Standard Style) Profile

Table 7-2. BP (Standard Style) Profile — Inch

4	3	0	4	BP	3	3	4	A
Seal Compound 4-Digit Material Code Example: 4304 = 90A Resilon ER				Profile	Bore Diameter Identifier (O-ring Dash Number) Example: 334 = 3.000			Energizer Material Code A = 70A Nitrile

Gland Dimensions — BP Profile

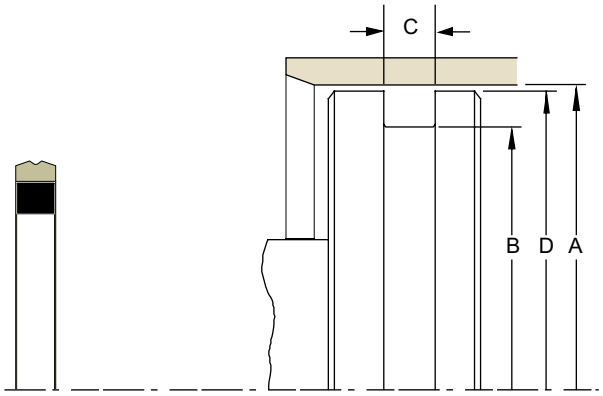

Please refer to Engineering Section 2, Page 2-8 for surface finish and additional hardware considerations.

Table 7-3. BP Gland Dimensions (Standard Size)

A Bore Diameter	B Groove Diameter	C Groove Width	D Piston Diameter*	Part Number
+.002/ -.000	+.000/ -.002	+.005/ -.000	+.000/ -.001	
0.562	0.320	0.187	0.559	**4304BP203A**
0.625	0.383	0.187	0.662	**4304BP204A**
0.687	0.445	0.187	0.684	**4304BP205A**
0.750	0.508	0.187	0.747	**4304BP206A**
0.812	0.570	0.187	0.809	**4304BP207A**
0.875	0.633	0.187	0.872	**4304BP208A**
0.937	0.695	0.187	0.934	**4304BP209A**
1.000	0.758	0.187	0.997	**4304BP210A**
1.062	0.820	0.187	1.059	**4304BP211A**
1.125	0.833	0.187	1.122	**4304BP212A**
1.187	0.945	0.187	1.184	**4304BP213A**
1.250	1.008	0.187	1.247	**4304BP214A**
1.312	1.070	0.187	1.309	**4304BP215A**
1.375	1.133	0.187	1.372	**4304BP216A**
1.437	1.195	0.187	1.434	**4304BP217A**
1.500	1.258	0.187	1.497	**4304BP218A**
1.562	1.320	0.187	1.559	**4304BP219A**
1.625	1.383	0.187	1.622	**4304BP220A**
1.687	1.445	0.187	1.684	**4304BP221A**
1.750	1.508	0.187	1.747	**4304BP222A**
1.875	1.505	0.281	1.872	**4304BP325A**
2.000	1.630	0.281	1.997	**4304BP326A**
2.125	1.755	0.281	2.122	**4304BP327A**
2.250	1.880	0.281	2.247	**4304BP328A**

*If used with wear rings, refer to wear ring piston diameter, see Section 9.

A Bore Diameter	B Groove Diameter	C Groove Width	D Piston Diameter*	Part Number
+.002/ -.000	+.000/ -.002	+.005/ -.000	+.000/ -.001	
2.375	2.005	0.281	2.372	**4304BP329A**
2.500	2.130	0.281	2.497	**4304BP330A**
2.625	2.255	0.281	2.622	**4304BP331A**
2.750	2.380	0.281	2.747	**4304BP332A**
2.875	2.505	0.281	2.872	**4304BP333A**
3.000	2.630	0.281	2.997	**4304BP334A**
3.125	2.755	0.281	3.122	**4304BP335A**
3.250	2.880	0.281	3.247	**4304BP336A**
3.375	3.005	0.281	3.372	**4304BP337A**
3.500	3.130	0.281	3.497	**4304BP338A**
3.625	3.255	0.281	3.622	**4304BP339A**
3.750	3.380	0.281	3.747	**4304BP340A**
3.875	3.505	0.281	3.872	**4304BP341A**
4.000	3.630	0.281	3.997	**4304BP342A**
4.125	3.755	0.281	4.122	**4304BP343A**
4.250	3.880	0.281	4.247	**4304BP344A**
4.375	4.005	0.281	4.372	**4304BP345A**
4.500	4.130	0.281	4.497	**4304BP346A**
4.625	4.255	0.281	4.622	**4304BP347A**
4.750	4.380	0.281	4.747	**4304BP348A**
4.875	4.505	0.281	4.872	**4304BP349A**
5.002	4.630	0.281	4.997	**4304BP350A**
5.127	4.653	0.375	5.123	**4304BP426A**
5.252	4.778	0.375	5.248	**4304BP427A**

*If used with wear rings, refer to wear ring piston diameter, see Section 9.

09/01/07

Parker Hannifin Corporation
Engineered Polymer Systems Division
Phone: 801 972 3000
www.parkerseals.com

Table 7-3. BP Gland Dimensions — Inch (Continued)

A Bore Diameter	B Groove Diameter	C Groove Width	D Piston Diameter*	Part Number
+.002/ -.000	+.000/ -.002	+.005/ -.000	+.000/ -.001	
5.377	4.903	0.375	5.373	**4304BP428A**
5.502	5.028	0.375	5.498	**4304BP429A**
5.627	5.153	0.375	5.623	**4304BP430A**
5.752	5.278	0.375	5.748	**4304BP431A**
5.877	5.403	0.375	5.873	**4304BP432A**
6.002	5.528	0.375	5.998	**4304BP433A**

*If used with wear rings, refer to wear ring piston diameter, see Section 9.

A Bore Diameter	B Groove Diameter	C Groove Width	D Piston Diameter*	Part Number
+.002/ -.000	+.000/ -.002	+.005/ -.000	+.000/ -.001	
6.127	5.653	0.375	6.123	**4304BP434A**
6.252	5.778	0.375	6.248	**4304BP435A**
6.502	6.028	0.375	6.498	**4304BP437A**
6.752	6.278	0.375	6.748	**4304BP438A**
7.002	6.528	0.375	6.998	**4304BP439A**

*If used with wear rings, refer to wear ring piston diameter, see Section 9.

NOTE: For sizes larger than those shown in the table, please contact your local Parker Seal representative.

Part Number Nomenclature — BP (Narrow Style) Profile

Table 7-4. BP (Narrow Style) Profile — Inch

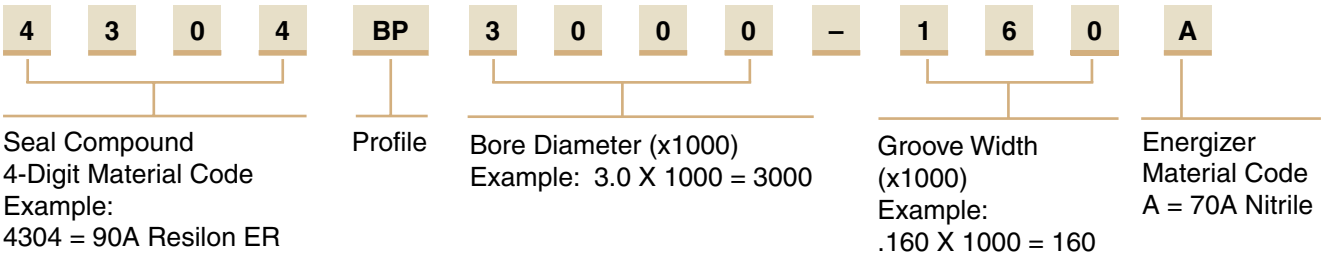

Gland Dimensions — BP Profile

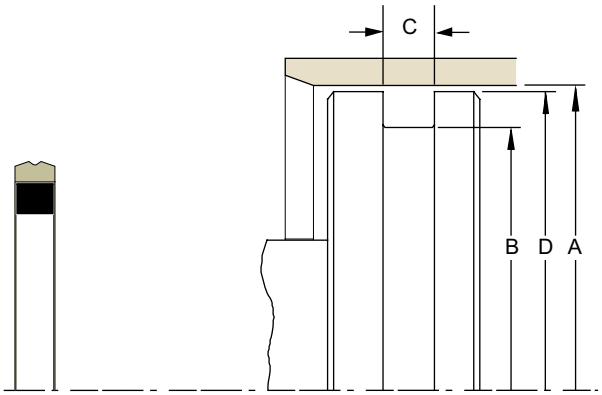

Please refer to Engineering Section 2, Page 2-8 for surface finish and additional hardware considerations.

Table 7-5. BP Gland Dimensions (Narrow Size)

A Bore Diameter	B Groove Diameter	C Groove Width	D Piston Diameter*	Part Number
+.002/ -.000	+.000/ -.002	+.002/ -.000	+.000/ -.001	
1.750	1.473	0.130	1.747	**4304BP1750-130A**
2.000	1.582	0.175	1.997	**4304BP2000-175A**
2.250	1.973	0.130	2.247	**4304BP2250-130A**
2.500	2.223	0.130	2.497	**4304BP2500-130A**
2.500	2.082	0.175	2.497	**4304BP2500-175A**
2.750	2.348	0.160	2.747	**4304BP2750-160A**
3.000	2.598	0.160	2.997	**4304BP3000-160A**

*If used with wear rings, refer to wear ring piston diameter, see Section 9.

A Bore Diameter	B Groove Diameter	C Groove Width	D Piston Diameter*	Part Number
+.002/ -.000	+.000/ -.002	+.002/ -.000	+.000/ -.001	
3.250	2.848	0.160	3.247	**4304BP3250-160A**
3.500	3.098	0.160	3.497	**4304BP3500-160A**
3.750	3.348	0.160	3.747	**4304BP3750-160A**
4.000	3.598	0.160	3.997	**4304BP4000-160A**
4.250	3.848	0.160	4.247	**4304BP4250-160A**
4.500	4.098	0.160	4.497	**4304BP4500-160A**
5.000	4.598	0.160	4.997	**4304BP5000-160A**

*If used with wear rings, refer to wear ring piston diameter, see Section 9.

NOTE: For sizes larger than those shown in the table, please contact your local Parker Seal representative.

Parker Hannifin Corporation
Engineered Polymer Systems Division
Phone: 801 972 3000

PSP Profile, TPU Piston Cap Seal

Parker's PSP seal is a squeeze type, bi-directional piston seal for use in light to medium duty hydraulic applications. Available from proprietary Parker polyurethanes, the PSP offers low friction, abrasion and extrusion resistance. The nitrile elastomer energizer ensures resistance to compression set to increase seal life. The PSP seal's geometry provides a fluid reservoir between the two sealing lips which holds system fluid, resulting in reduced breakaway and running friction. Designed to retrofit grooves for a single o-ring or an o-ring with two back-ups, the PSP profile is easy to install and resist rolling and twisting in long stroke applications.

The PSP profile is sold only as an assembly (seal and energizer). See part number nomenclature.

Technical Data

Standard Materials*	Temperature Range	Pressure Range†	Surface Speed
Cap			
P4622A90	-65°F to 225°F (-54°C to 107°C)	5000 psi (344 bar)	< 1.6 ft/s (0.5 m/sec)
P4300A90	-65°F to 275°F (-54°C to 135°C)	5000 psi (344 bar)	< 1.6 ft/s (0.5 m/sec)
Energizer			
A 70A Nitrile	-30°F to 250°F (-34°C to 121°C)		

***Alternate Materials:** For applications that may require an alternate material, please contact your local Parker Seal representative.

†Pressure Range without wear rings (see Table 2-4, page 2-5).

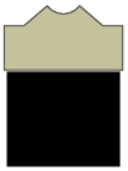

PSP Cross-Section

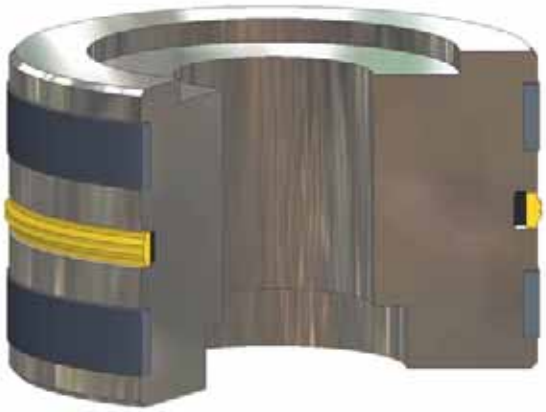

PSP installed in Piston Gland

Parker Hannifin Corporation
Engineered Polymer Systems Division
Phone: 801 972 3000

Part Number Nomenclature — PSP Profile

Table 7-6. PSP Profile — Inch

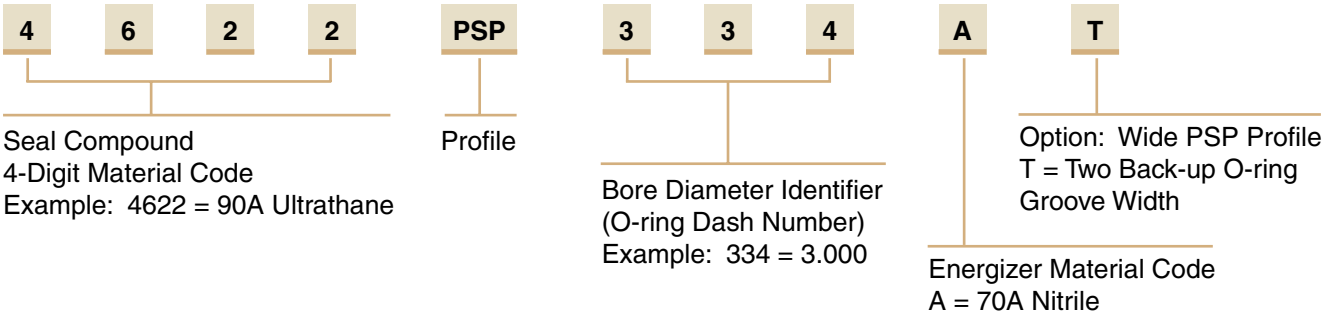

Gland Dimensions — PSP Profile

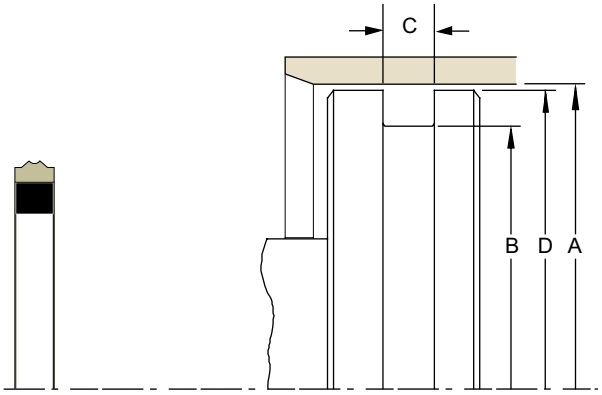

Please refer to Engineering Section 2, Page 2-8 for surface finish and additional hardware considerations.

Table 7-7. PSP Gland Dimensions

A Bore Diameter	B Groove Diameter	C Groove Width	D Piston Diameter*	Compound (X = Standard Offering)			Part Number	
				PSP		Wide PSP	Compound Code	
				4622	4300	4300		
+.002/-.000	+.000/-.002	+.005/-.000	+.000/-.001					
0.625	0.383	0.187	0.662		X		XXXX	PSP204A
0.750	0.508	0.187	0.747		X		XXXX	PSP206A
1.000	0.758	0.187	0.997	X	X		XXXX	PSP210A
1.250	1.008	0.187	1.247	X	X		XXXX	PSP214A
1.500	1.258	0.187	1.497	X	X		XXXX	PSP218A
1.500	1.258	0.275	1.497			X	XXXX	PSP218AT
1.750	1.508	0.187	1.747	X			XXXX	PSP222A
1.750	1.508	0.275	1.747			X	XXXX	PSP222AT
1.875	1.633	0.187	1.872		X		XXXX	PSP223A
2.125	1.833	0.187	2.122		X		XXXX	PSP225A
2.250	2.008	0.187	2.247		X		XXXX	PSP226A
1.875	1.505	0.281	1.872				XXXX	PSP325A
2.000	1.630	0.281	1.997	X	X		XXXX	PSP326A
2.000	1.630	0.410	1.997			X	XXXX	PSP326AT
2.250	1.880	0.281	2.247	X	X		XXXX	PSP328A
2.500	2.130	0.281	2.497	X	X		XXXX	PSP330A
2.500	2.130	0.410	2.497			X	XXXX	PSP330AT
2.625	2.255	0.281	2.622		X		XXXX	PSP331A
2.750	2.380	0.281	2.747	X	X		XXXX	PSP332A
3.000	2.630	0.281	2.997	X	X		XXXX	PSP334A

*If used with wear rings, refer to wear ring piston diameter, see Section 9.

Parker Hannifin Corporation
Engineered Polymer Systems Division
Phone: 801 972 3000

Table 7-7. PSP Gland Dimensions — Inch (Continued)

A Bore Diameter	B Groove Diameter	C Groove Width	D Piston Diameter*	Compound (X = Standard Offering)			Part Number	
				PSP		Wide PSP	Compound Code	
				4622	4300	4300		
+.002/-.000	+.000/-.002	+.005/-.000	+.000/-.001					
3.000	2.630	0.410	2.997			X	XXXX	PSP334AT
3.125	2.755	0.281	3.122		X		XXXX	PSP335A
3.250	2.880	0.281	3.247	X	X		XXXX	PSP336A
3.500	3.130	0.281	3.497	X	X		XXXX	PSP338A
3.500	3.130	0.410	3.497			X	XXXX	PSP338AT
3.625	3.255	0.281	3.622	X			XXXX	PSP339A
4.000	3.630	0.281	3.997	X	X		XXXX	PSP342A
4.000	3.630	0.410	3.997			X	XXXX	PSP342AT
4.500	4.130	0.281	4.497	X			XXXX	PSP346A
4.500	4.130	0.410	4.497			X	XXXX	PSP346AT
5.002	4.630	0.281	4.997	X			XXXX	PSP350A
5.002	4.528	0.538	4.997			X	XXXX	PSP425AT
5.502	5.028	0.375	5.498	X			XXXX	PSP429A
5.502	5.028	0.538	5.498			X	XXXX	PSP429AT
6.002	5.528	0.375	5.998	X			XXXX	PSP433A
6.002	5.528	0.538	5.998			X	XXXX	PSP433AT
6.502	6.028	0.375	6.498		X		XXXX	PSP437A
7.002	6.528	0.538	6.998			X	XXXX	PSP439AT
8.002	7.528	0.375	7.998		X		XXXX	PSP443A
12.002	11.528	0.375	11.998		X		XXXX	PSP452A

*If used with wear rings, refer to wear ring piston diameter, see Section 9.

NOTE: For sizes larger than those shown in the table, please contact your local Parker Seal representative.

Parker Hannifin Corporation
Engineered Polymer Systems Division
Phone: 801 972 3000

CC Profile, High Pressure Split Cap Piston Seal

Parker's CC profile, also known as the ChemCast™ seal, is a bi-directional piston seal designed for heavy duty applications. The CC profile design consists of a self-lubricated, glass reinforced, heat-stabilized, thermoplastic O.D. sealing ring that is energized by a flexible, oval shape, energizer. When installed in the bore, the precision step cut ring is aligned and compressed to provide drift free operation that can withstand pressure exceeding 50,000 psi. The hard thermoplastic cap allows the CC profile to work effectively in substandard, rough-surfaced cylinders with much lower tolerances. The CC is an excellent choice for mobile equipment experiencing shock loads. The CC profile can pass over ports, resist cold flow and protect against metal-to-metal contact.

The CC profile is sold only as an assembly (seal and energizer). See part number nomenclature.

Technical Data

Standard Materials		Temperature Range	Pressure Range†	Surface Speed
Cap				
W4650NHH		-65°F to 300°F (-54°C to 149°C)	50,000 psi (3,447 bar)	< 3.3 ft/s (1.0 m/sec)
Energizer				
A	80A Nitrile	-40°F to 250°F (-40°C to 121°C)		

†**Pressure Range** without wear rings (see Table 2-4, page 2-5).

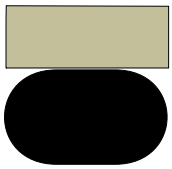

CC Cross-Section

Part Number Nomenclature — CC Profile

Part numbers are provided in Table 7-8, page 7-12.

CC installed in Piston Gland

Parker Hannifin Corporation
Engineered Polymer Systems Division
Phone: 801 972 3000

Gland Dimensions — CC Profile — Inch

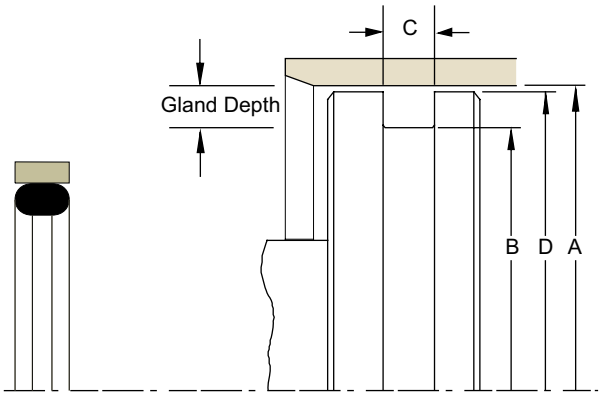

Please refer to Engineering Section 2, Page 2-8 for surface finish and additional hardware considerations.

Table 7-8. CC Gland Dimensions — Inch

A Bore Diameter	B Groove Diameter	C Groove Width	D Piston Diameter*	Custom Part Number
+.005/-.000	+.000/-.005	+.005/-.000	+.000/-.005	
1.500	1.042	0.252	1.448	**090150011**
1.750	1.292	0.252	1.698	**090175012**
2.000	1.462	0.282	1.935	**090200011**
2.000	1.462	0.312	1.935	**090200021**
2.250	1.712	0.282	2.185	**090225011**
2.500	1.962	0.282	2.435	**090250011**
2.500	1.962	0.312	2.435	**090250021**
2.750	2.212	0.282	2.685	**090275011**
3.000	2.442	0.282	2.920	**090300011**
3.000	2.442	0.312	2.920	**090300021**
3.025	2.467	0.282	2.945	**090302511**
3.250	2.692	0.282	3.170	**090325011**
3.500	2.942	0.282	3.420	**090350011**
3.500	2.942	0.312	3.420	**090350021**
4.000	3.442	0.312	3.920	**090400021**
4.000	3.442	0.282	3.920	**090400011**
4.000	3.442	0.424	3.920	**090400031**
4.250	3.692	0.282	4.170	**090425011**
4.500	3.942	0.375	4.420	**090450051**
4.500	3.942	0.312	4.420	**090450021**
4.525	3.967	0.282	4.445	**090452251**
5.000	4.442	0.282	4.920	**090500011**
5.000	4.442	0.375	4.920	**090500051**
5.025	4.467	0.282	4.945	**090502511**
5.025	4.467	0.375	4.945	**090502521**
6.000	5.240	0.375	5.900	**090600011**

*If used with wear rings, refer to wear ring piston diameter, see Section 9.

A Bore Diameter	B Groove Diameter	C Groove Width	D Piston Diameter*	Custom Part Number
+.005/-.000	+.000/-.005	+.005/-.000	+.000/-.005	
6.025	5.265	0.375	5.925	**090602511**
6.500	5.740	0.375	6.400	**090650011**
7.000	6.240	0.375	6.900	**090700011**
7.015	6.255	0.375	6.915	**090701511**
7.500	6.740	0.375	7.400	**090750011**
8.000	7.240	0.375	7.900	**090800011**
8.025	7.265	0.375	7.925	**090802511**
8.500	7.740	0.375	8.400	**090850011**
8.500	7.740	0.375	8.400	**090850021**
9.000	8.124	0.375	8.890	**090900011**
9.025	8.149	0.375	8.915	**090902511**
9.500	8.624	0.375	9.390	**090950011**
10.000	9.124	0.375	9.890	**091000011**
10.023	9.147	0.375	9.913	**091002311**
12.000	11.124	0.375	11.890	**091200011**
12.500	11.624	0.375	12.390	**091250011**
13.000	12.124	0.375	12.890	**091300011****
13.500	12.624	0.375	13.390	**091350011****
14.000	13.124	0.375	13.870	**091400011****
15.000	14.124	0.375	14.870	**091500011****
15.500	14.624	0.375	15.370	**091550011****
17.000	16.124	0.375	16.870	**091700011****
18.000	17.124	0.375	17.870	**091800011****
22.000	21.124	0.375	21.870	**092200011****
26.000	25.124	0.375	25.870	**092600011****
36.000	35.124	0.375	35.870	**093600011****

*If used with wear rings, refer to wear ring piston diameter, see Section 9.
**Segmented ring.

NOTE: For sizes larger than those shown in the table, please contact your local Parker Seal representative.

Parker Hannifin Corporation
Engineered Polymer Systems Division
Phone: 801 972 3000

OK Profile, High Pressure Split Cap Piston Seal

The OK profile is a bi-directional piston seal designed for heavy duty hydraulic applications. Its durable, two-piece design installs easily onto a solid piston without the necessity of auxiliary tools. When installed into the bore, the diameter of the OK profile is compressed to close the step cut in the cap to provide excellent, drift free sealing performance. The glass-filled nylon sealing surface handles the toughest applications. It will resist shock loads, wear, contamination, and will resist extrusion or chipping when passing over cylinder ports. The rectangular nitrile energizer ring ensures resistance to compression set to increase seal life.

The OK profile is sold only as an assembly. See part number nomenclature.

Technical Data

Standard Materials		Temperature Range	Pressure Range†	Surface Speed
Cap				
W4650NHH		-65°F to 275°F (-54°C to 135°C)	7250 psi (500 bar)	< 3.3 ft/s (1.0 m/sec)
Energizer				
A	70A Nitrile	-40°F to 250°F (-40°C to 121°C)		

†**Pressure Range** without wear rings (see Table 2-4, page 2-5).

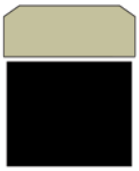

OK Cross-Section

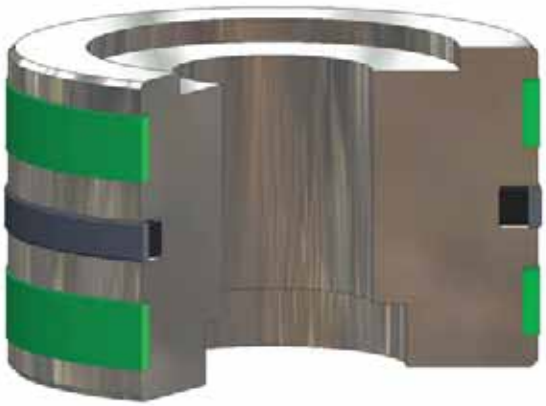

OK installed in Piston Gland

Parker Hannifin Corporation
Engineered Polymer Systems Division
Phone: 801 972 3000

Part Number Nomenclature — OK Profile

Table 7-9. OK Profile — Inch

4	6	5	0	OK	2	7	9	0	3	0	0	0	–	3	1	2	A

- Seal Compound 4-Digit Material Code Example: 4650 = MolyGard
- Profile
- Gland Depth (x1000) Example: .279 X 1000 = 279
- Bore Diameter (x1000) Example: 3.000 X 1000 = 03000
- Groove Width (x1000) Example: .312 X 1000 = 3120
- Energizer Material Code A = 70A Nitrile

Gland Dimensions — OK Profile

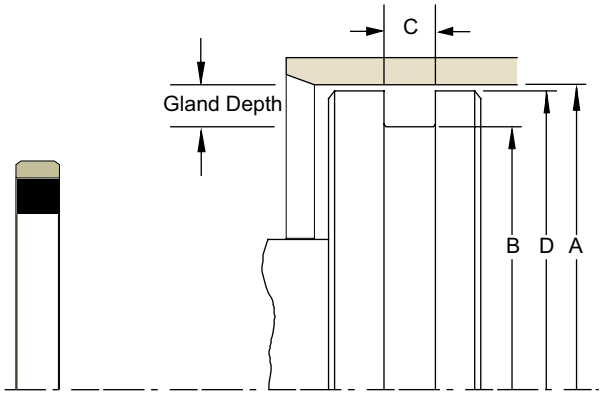

Please refer to Engineering Section 2, Page 2-8 for surface finish and additional hardware considerations.

Table 7-10. OK Gland Dimensions — Inch

A Bore Diameter	B Groove Diameter	C Groove Width	D Piston Diameter*	Part Number
+.005/-.000	+.000/-.005	+.005/-.000	+.000/-.001	
1.500	0.962	0.282	1.435	**4650OK26901500-282A**
2.000	1.462	0.282	1.935	**4650OK26902000-282A**
2.500	1.962	0.282	2.435	**4650OK26902500-282A**
2.500	1.962	0.312	2.435	**4650OK26902500-312A**
2.750	2.192	0.282	2.670	**4650OK27902750-282A**
3.000	2.442	0.312	2.920	**4650OK27903000-312A**
3.250	2.692	0.312	3.170	**4650OK27903250-312A**
3.500	2.942	0.282	3.420	**4650OK27903500-282A**
3.500	2.942	0.312	3.420	**4650OK27903500-312A**
3.750	3.192	0.282	3.670	**4650OK27903750-282A**
4.000	3.442	0.282	3.920	**4650OK27904000-282A**
4.000	3.402	0.315	3.920	**4650OK29904000-315A**
4.500	3.942	0.282	4.420	**4650OK27904500-282A**
5.000	4.442	0.282	4.920	**4650OK27905000-282A**
5.500	4.740	0.377	5.400	**4650OK38005500-377A**
6.000	5.240	0.377	5.900	**4650OK38006000-377A**
7.000	6.240	0.377	6.900	**4650OK38007000-377A**
8.000	7.240	0.377	7.900	**4650OK38008000-377A**

*If used with wear rings, refer to wear ring piston diameter, see Section 9.

NOTE: For sizes larger than those shown in the table, please contact your local Parker Seal representative.

Parker Hannifin Corporation
Engineered Polymer Systems Division
Phone: 801 972 3000

PIP Profile, Loaded Lip Seal with Pressure Inverting Pedestal

The Parker PIP profile combines a “Pressure Inverting Pedestal” with a Type B PolyPak to provide excellent, bi-directional piston sealing in hydraulic applications. The Pressure Inverting Pedestal conforms to the beveled sealing lips of the Type B PolyPak to provide extrusion resistance when pressure is applied to the heel side of the seal. The PIP profile requires only a single seal groove for installation. This eliminates the use of two PolyPaks on the piston to save space and increase bearing length.

Note: The PIP profile may be purchased as an assembly (Type B PolyPak and PIP ring) or separately as a PIP ring only. If purchasing as an assembly, the standard material is a 4615 Type B PolyPak with 4617 PIP ring. If you desire alternate material combinations, please order the PIP ring and Type B PolyPak separately. Call your Parker Seal representative for details.

Technical Data

Standard Materials*	Temperature Range	Pressure Range†	Surface Speed
Type B Polypak			
P4615A90	-65°F to 200°F (-54°C to 93°C)	5,000 psi (344 bar)	< 1.6 ft/s (0.5 m/s)
PIP Ring			
P4617D65	-65°F to 250°F (-54°C to 121°C)	5,000 psi (344 bar)	< 1.6 ft/s (0.5 m/s)
Optional Materials			
PIP Ring			
Z4652D65	-65°F to 275°F (-54°C to 135°C)	10,000 psi** (689 bar)	
W4685R119	-65°F to 500°F (-54°C to 260°C)	10,000+ psi (689 bar)	

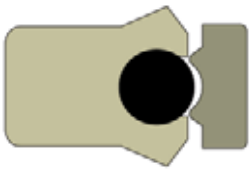

PIP Cross-Section

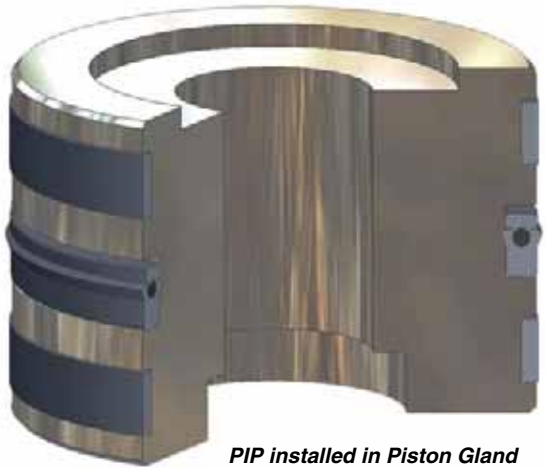

PIP installed in Piston Gland

***Alternate Materials:** For applications that may require an alternate material, please contact your local Parker Seal representative.

†Pressure Range without wear rings (see Table 2-4, page 2-5).

****Pressure rating** dependant on entire assembly of PolyPak shell/energizer and PIP ring.

Note: The PIP may be ordered separately. Please contact your local Parker Seal representative.

Parker Hannifin Corporation
Engineered Polymer Systems Division
Phone: 801 972 3000

Part Number Nomenclature — PIP Assembly Profile

Table 7-11. PIP Assembly Profile — Inch

4 6 1 5	2 5 0	0 2 5 0 0	P	3 7 5 B
Seal Compound 4-Digit Material Code Example: 4615 = 90A Molythane	Gland Depth (x1000) or Seal Nominal Radial Cross-Section Example: .250 x 1000 = 250	Seal Nominal I.D. (x1000) Example: 2.500 x 1000 = 02500	Cap Profile PIP 4617 is standard for assemblies only	Base Profile Type B PolyPak Axial Width

Part Number Nomenclature — PIP Ring Only Profile

Table 7-12. PIP Ring Only Profile — Inch

4 6 1 7	2 5 0	0 2 5 0 0	PR
PIP Ring Compound 4-Digit Material Code Example: 4617 = 90A Molythane 4652 = PolyMyte 4685 = UltraCOMP	Gland Depth (x1000) or Seal Nominal Radial Cross-Section Example: .250 x 1000 = 250	Seal Nominal I.D. (x1000) Example: 2.500 x 1000 = 02500	Profile

Gland Dimensions — PIP Profile

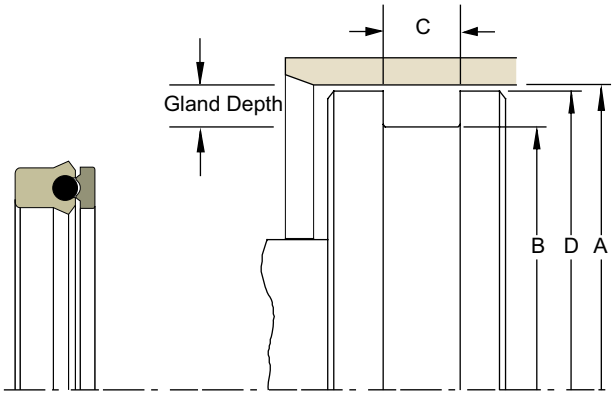

Please refer to Engineering Section 2, Page 2-8 for surface finish and additional hardware considerations.

Table 7-13. Gland Dimension Tolerances

Nominal Gland Depth	A Bore Diameter	B Groove Diameter	C Groove Width	D Piston Diameter
1/8	+.002/-.000	+.000/-.002	+.015/-.000	+.000/-.001
3/16	+.002/-.000	+.000/-.002		+.000/-.002
1/4	+.003/-.000	+.000/-.003		+.000/-.002
5/16	+.003/-.000	+.000/-.004		+.000/-.002
3/8	+.004/-.000	+.000/-.005		+.000/-.002
7/16	+.005/-.000	+.000/-.006		+.000/-.002
1/2	+.005/-.000	+.000/-.007		+.000/-.003
9/16	+.006/-.000	+.000/-.008		+.000/-.003
5/8	+.006/-.000	+.000/-.009		+.000/-.003
3/4	+.007/-.000	+.000/-.010		+.000/-.004
7/8	+.008/-.000	+.000/-.011		+.000/-.005
1	+.009/-.000	+.000/-.012		+.000/-.005

Table 7-14. PIP Gland Dimensions — Inch

A Bore Diameter	B Groove Diameter	C Groove Width	D Piston Diameter*	Part Number
1.250	0.875	0.453	1.249	**461518700875P312B**
1.250	1.000	0.340	1.249	**461512501000P250B**
1.500	1.000	0.550	1.499	**461525001000P375B**
1.500	1.125	0.453	1.498	**461518701125P312B**
1.500	1.250	0.340	1.499	**461512501250P250B**
1.562	1.312	0.271	1.561	**461512501312P187B**

*If used with wear rings, refer to wear ring piston diameter, see Section 9.

A Bore Diameter	B Groove Diameter	C Groove Width	D Piston Diameter*	Part Number
1.625	1.375	0.340	1.624	**461512501375P250B**
1.687	1.437	0.340	1.686	**461512501437P250B**
1.750	1.250	0.550	1.749	**461525001250P375B**
1.750	1.375	0.453	1.749	**461518701375P312B**
1.750	1.500	0.340	1.749	**461512501500P250B**
2.000	1.500	0.550	1.999	**461525001500P375B**

*If used with wear rings, refer to wear ring piston diameter, see Section 9.

09/01/07

Parker Hannifin Corporation
Engineered Polymer Systems Division
Phone: 801 972 3000
www.parkerseals.com

Table 7-14. PIP Gland Dimensions — Inch (Continued)

A Bore Diameter	B Groove Diameter	C Groove Width	D Piston Diameter*	Part Number
2.000	1.625	0.453	1.999	**461518701625P312B**
2.000	1.625	0.523	1.999	**461518701625P375B**
2.125	1.750	0.523	2.124	**461518701750P375B**
2.250	1.750	0.550	2.249	**461525001750P375B**
2.250	1.875	0.523	2.249	**461518701875P375B**
2.250	2.000	0.271	2.249	**461512502000P187B**
2.375	2.000	0.523	2.374	**461518702000P375B**
2.500	1.875	0.715	2.499	**461531201875P500B**
2.500	2.000	0.550	2.499	**461525002000P375B**
2.500	2.125	0.523	2.499	**461518702125P375B**
2.625	2.250	0.523	2.624	**461518702250P375B**
2.750	2.250	0.550	2.749	**461525002250P375B**
2.750	2.375	0.403	2.749	**461518702375P266B**
2.750	2.375	0.523	2.749	**461518702375P375B**
2.875	2.250	0.715	2.873	**461531202250P500B**
2.875	2.500	0.523	2.874	**461518702500P375B**
3.000	2.250	0.895	2.998	**461537502250P625B**
3.000	2.375	0.715	2.998	**461531202375P500B**
3.000	2.500	0.413	2.999	**461525002500P250B**
3.000	2.500	0.550	2.999	**461525002500P375B**
3.000	2.625	0.523	2.999	**461518702625P375B**
3.125	2.750	0.523	3.124	**461518702750P375B**
3.250	2.500	0.895	3.248	**461537502500P625B**
3.250	2.625	0.715	3.248	**461531202625P500B**
3.250	2.750	0.550	3.249	**461525002750P375B**
3.250	2.875	0.523	3.249	**461518702875P375B**
3.375	2.875	0.550	3.374	**461525002875P375B**
3.375	3.000	0.523	3.374	**461518703000P375B**
3.500	3.000	0.550	3.499	**461525003000P375B**
3.500	3.125	0.523	3.499	**461518703125P375B**
3.625	3.125	0.550	3.624	**461525003125P375B**
3.750	3.250	0.550	3.749	**461525003250P375B**
3.875	3.375	0.550	3.874	**461525003375P375B**
4.000	3.250	0.895	3.998	**461537503250P625B**
4.000	3.375	0.715	3.998	**461531203375P500B**
4.000	3.500	0.550	3.999	**461525003500P375B**
4.000	3.625	0.523	3.999	**461518703625P375B**
4.250	3.750	0.550	4.249	**461525003750P375B**
4.250	3.875	0.523	4.249	**461518703875P375B**
4.375	4.000	0.523	4.374	**461518704000P375B**
4.500	3.750	0.895	4.498	**461537503750P625B**
4.500	4.000	0.550	4.499	**461525004000P375B**
4.500	4.000	0.756	4.499	**461525004000P562B**
4.750	4.000	0.895	4.748	**461537504000P625B**
4.750	4.250	0.550	4.749	**461525004250P375B**
4.750	4.250	0.756	4.749	**461525004250P562B**
4.875	4.250	0.783	4.873	**461531204250P562B**
5.000	4.000	1.100	4.998	**461550004000P750B**
5.000	4.250	0.895	4.998	**461537504250P625B**
5.000	4.375	0.783	4.998	**461531204375P562B**

*If used with wear rings, refer to wear ring piston diameter, see Section 9.

A Bore Diameter	B Groove Diameter	C Groove Width	D Piston Diameter*	Part Number
5.000	4.500	0.550	4.999	**461525004500P375B**
5.000	4.500	0.688	4.999	**461525004500P500B**
5.000	4.500	0.756	4.999	**461525004500P562B**
5.125	4.500	0.853	5.123	**461531204500P625B**
5.125	4.625	0.756	5.124	**461525004625P562B**
5.250	4.750	0.756	5.249	**461525004750P562B**
5.375	4.875	0.756	5.374	**461525004875P562B**
5.500	4.750	0.895	5.498	**461537504750P625B**
5.500	5.000	0.550	5.499	**461525005000P375B**
5.500	5.000	0.756	5.499	**461525005000P562B**
5.750	5.000	0.895	5.748	**461537505000P625B**
5.750	5.250	0.550	5.749	**461525005250P375B**
5.750	5.250	0.756	5.749	**461525005250P562B**
6.000	5.000	1.100	5.998	**461550005000P750B**
6.000	5.250	0.758	5.998	**461537505250P500B**
6.000	5.250	0.895	5.998	**461537505250P625B**
6.000	5.500	0.550	5.999	**461525005500P375B**
6.000	5.500	0.756	5.999	**461525005500P562B**
6.125	5.500	0.853	6.123	**461531205500P625B**
6.250	5.250	0.825	6.248	**461550005250P500B**
6.250	5.250	1.100	6.248	**461550005250P750B**
6.250	5.500	0.895	6.248	**461537505500P625B**
6.375	5.625	0.895	6.373	**461537505625P625B**
6.500	5.750	0.895	6.498	**461537505750P625B**
6.500	6.000	0.550	6.499	**461525006000P375B**
6.500	6.000	0.618	6.499	**461525006000P437B**
6.500	6.000	0.756	6.499	**461525006000P562B**
6.750	6.250	0.756	6.749	**461525006250P562B**
7.000	6.250	0.895	6.998	**461537506250P625B**
7.000	6.500	0.550	6.999	**461525006500P375B**
7.000	6.500	0.756	6.999	**461525006500P562B**
7.250	6.500	0.895	7.248	**461537506500P625B**
7.250	6.750	0.756	7.249	**461525006750P562B**
7.500	6.750	0.895	7.498	**461537506750P625B**
7.500	7.000	0.756	7.499	**461525007000P562B**
8.000	7.000	1.100	7.998	**461550007000P750B**
8.000	7.250	0.895	7.998	**461537507250P625B**
8.000	7.500	0.756	7.999	**461525007500P562B**
8.250	7.750	0.756	8.249	**461525007750P562B**
8.500	7.750	0.895	8.498	**461537507750P625B**
9.000	8.000	1.100	8.998	**461550008000P750B**
9.250	8.500	0.895	9.248	**461537508500P625B**
9.875	9.250	0.853	9.873	**461531209250P625B**
10.000	9.000	1.100	9.998	**461550009000P750B**
10.375	9.750	0.853	10.373	**461531209750P625B**
10.500	9.500	1.100	10.498	**461550009500P750B**
11.000	10.000	1.100	10.998	**461550010000P750B**
11.500	10.500	1.100	11.498	**461550010500P750B**
12.000	11.000	1.100	11.998	**461550011000P750B**
12.250	11.250	1.100	12.248	**461550011250P750B**

*If used with wear rings, refer to wear ring piston diameter, see Section 9.

Parker Hannifin Corporation
Engineered Polymer Systems Division
Phone: 801 972 3000

Table 7-14. PIP Gland Dimensions — Inch (Continued)

A Bore Diameter	B Groove Diameter	C Groove Width	D Piston Diameter*	Part Number
12.500	11.500	1.100	12.498	**461550011500P750B**
12.875	11.875	1.100	12.873	**461550011875P750B**
13.000	12.000	1.100	12.998	**461550012000P750B**
13.000	12.250	0.895	12.998	**461537512250P625B**
14.000	13.500	0.756	13.998	**461525013500P562B**
15.000	14.000	1.100	14.998	**461550014000P750B**
15.000	14.250	0.895	14.998	**461537514250P625B**
15.750	14.750	1.100	15.748	**461550014750P750B**

*If used with wear rings, refer to wear ring piston diameter, see Section 9.

A Bore Diameter	B Groove Diameter	C Groove Width	D Piston Diameter*	Part Number
16.000	14.500	1.788	15.997	**461575014500P1250B**
16.000	15.000	1.100	15.998	**461550015000P750B**
20.000	19.000	1.100	19.998	**461550019000P750B**
21.250	20.250	1.100	21.248	**461550020250P750B**
22.000	21.000	1.100	21.998	**461550021000P750B**
25.500	24.500	1.100	25.498	**461550024500P750B**
39.250	38.250	1.100	39.248	**461550038250P750B**
43.000	42.000	1.100	42.998	**461550042000P750B**

*If used with wear rings, refer to wear ring piston diameter, see Section 9.

NOTE: For sizes larger than those shown in the table, please contact your local Parker Seal representative.

Parker Hannifin Corporation
Engineered Polymer Systems Division
Phone: 801 972 3000

Piston Seal
B7 Profile

B7 Profile, U-cup Piston Seal

The B7 profile is a non-symmetrical, hydraulic cylinder piston seal. The knife trimmed, beveled lip contacts the bore to provide enhanced low to high pressure sealing and wiping action. When installed, the diameter of the B7 profile is stretched slightly to fit the gland. This ensures a tight static seal with the gland and improves stability in application. The B7 profile is available in Parker proprietary urethane compounds providing excellent wear, extrusion and compression set resistance. The B7 profile is a uni-directional seal. Two seals can be placed on a piston, back to back, in separate glands offering bi-directional fluid sealing.

Technical Data

Standard Materials*	Temperature Range	Pressure Range†	Surface Speed
P4300A90	-65°F to 275°F (-54°C to 135°C)	5,000 psi (344 bar)	< 1.6 ft/s (0.5 m/s)
P4301A90	-65°F to 275°F (-54°C to 135°C)	5000 psi (344 bar)	< 1.6 ft/s (0.5 m/s)
P4700A90	-65°F to 200°F (-54°C to 93°C)	5,000 psi (344 bar)	< 1.6 ft/s (0.5 m/s)
P5065A88	-70°F to 200°F (-57°C to 93°C)	3,500 psi (241 bar)	< 1.6 ft/s (0.5 m/s)

***Alternate Materials:** For applications that may require an alternate material, please contact your local Parker Seal representative.

†Pressure Range without wear rings (see Table 2-4, page 2-5).

B7 Cross-Section

B7 installed in Piston Gland

Parker Hannifin Corporation
Engineered Polymer Systems Division
Phone: 801 972 3000

Part Number Nomenclature — B7 Profile

Table 7-15. B7 Profile — Inch

4	3	0	0	B7	2	5	0	0	2	5	0	0	–	3	7	5

Seal Compound
4-Digit Material Code
Example:
4300 = 90A Resilon
HT Polyurethane

Profile

Gland Depth (x1000)
or Seal Nominal Radial
Cross-Section
Example: .250 x 1000 = 250

Seal Nominal I.D.
(x1000)
Example:
2.500 x 1000 = 02500

Seal Nominal
Axial Width
Example:
.375 x 1000 = 375

Gland Dimensions — B7 Profile

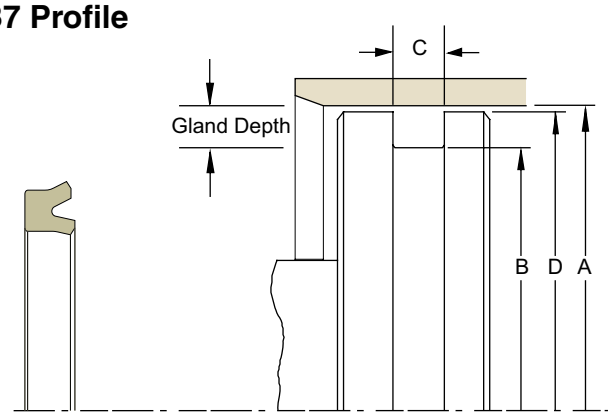

Table 7-16. Gland Dimension Tolerances

Nominal Gland Depth	A Bore Diameter	B Groove Diameter	C Groove Width	D Piston Diameter
1/8	+.002/-.000	+.000/-.002	+.015/-.000	+.000/-.001
3/16	+.002/-.000	+.000/-.002		+.000/-.002
1/4	+.003/-.000	+.000/-.003		+.000/-.002
5/16	+.003/-.000	+.000/-.004		+.000/-.002
3/8	+.004/-.000	+.000/-.005		+.000/-.002

Please refer to Engineering Section 2, Page 2-8 for surface finish and additional hardware considerations.

Table 7-17. B7 Gland Dimensions — Inch

A Bore Diameter	B Groove Diameter	C Groove Width	D Piston Diameter*	Compound Code (X = Standard Offering)			Part Number		
				4300	4700	5065	Compound Code	Profile Code	
1.125	0.750	0.206	1.124	X		X	XXXX	B7	18700750-187
1.375	0.875	0.275	1.374	X		X	XXXX	B7	25000875-250
1.500	1.250	0.206	1.499	X		X	XXXX	B7	12501250-187
1.625	1.125	0.343	1.624		X	X	XXXX	B7	25001125-312
1.625	1.250	0.343	1.624	X		X	XXXX	B7	18701250-312
1.750	1.375	0.206	1.749	X		X	XXXX	B7	18701375-187
1.875	1.500	0.413	1.874	X		X	XXXX	B7	18701500-375
2.000	1.625	0.343	1.999	X		X	XXXX	B7	18701625-312

*If used with wear rings, refer to wear ring piston diameter, see Section 9.

09/01/07

Parker Hannifin Corporation
Engineered Polymer Systems Division
Phone: 801 972 3000
www.parkerseals.com

Table 7-17. B7 Gland Dimensions — Inch (Continued)

A Bore Diameter	B Groove Diameter	C Groove Width	D Piston Diameter*	Compound Code (X = Standard Offering)			Part Number		
				4300	4700	5065	Compound Code	Profile Code	
2.250	2.000	0.275	2.249	X		X	XXXX	B7	12502000-250
2.375	2.000	0.343	2.374	X		X	XXXX	B7	18702000-312
2.500	2.000	0.413	2.499	X		X	XXXX	B7	25002000-375
2.625	2.000	0.275	2.624	X		X	XXXX	B7	25002125-250
2.750	2.250	0.413	2.749	X		X	XXXX	B7	25002250-375
3.000	2.250	0.413	2.998		X	X	XXXX	B7	37502250-375
3.000	2.625	0.343	2.999	X		X	XXXX	B7	18702625-312
3.125	2.625	0.275	3.124	X		X	XXXX	B7	25002625-250
3.250	2.500	0.481	3.248		X	X	XXXX	B7	37502500-437
3.250	2.750	0.413	3.249	X		X	XXXX	B7	25002750-375
4.000	3.250	0.413	3.998		X	X	XXXX	B7	37503250-375
4.000	3.500	0.413	3.999	X		X	XXXX	B7	25003500-375
4.500	3.750	0.550	4.498		X	X	XXXX	B7	37503750-500
6.000	4.250	0.550	5.998		X	X	XXXX	B7	37505250-500

*If used with wear rings, refer to wear ring piston diameter, see Section 9.

NOTE: For sizes larger than those shown in the table, please contact your local Parker Seal representative.

Part Number Nomenclature — B7 Profile

Table 7-18. B7 Profile — Metric

M 3 0 0 B7 0 5 . 0 0 7 0 – 8 . 6

Seal Compound
4-Digit Material Code
Example:
M300 = 90A Resilon HT Polyurethane

Profile

Gland Depth (mm)
or Seal Nominal Radial Cross-Section
Example: 05.0 = 5.0mm

Seal Nominal I.D. (mm)
Example:
070 = 70mm

Seal Nominal Axial Width
Example:
8.6 = 8.6mm

7

Parker Hannifin Corporation
Engineered Polymer Systems Division
Phone: 801 972 3000

Gland Dimensions — B7 Profiles

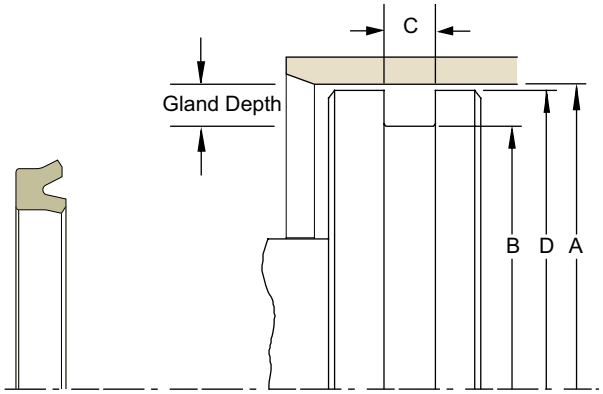

Please refer to Engineering Section 2, Page 2-8 for surface finish and additional hardware considerations.

Table 7-19. B7 Gland Dimensions — Metric (mm)

A Bore Diameter	B Groove Diameter	C Groove Width	D Piston Diameter*	Compound Code (X = Standard Offering)			Part Number		
				M300	M700	M065	Compound Code	Profile Code	
H9	h9	+.25/-.00	f8						
For ISO tolerances refer to Appendix F.									
40	30	8	40	X		X	XXXX	B7	05.0030-7.3
43	35	10	43	X		X	XXXX	B7	04.0035-9
45	34	8	45		X	X	XXXX	B7	05.5034-7.3
45	35	8	45	X		X	XXXX	B7	05.0035-7.3
50	40	8	50	X		X	XXXX	B7	05.0040-7.3
55	45	8	55	X		X	XXXX	B7	05.0045-7.3
60	50	7	60	X		X	XXXX	B7	05.0050-6
60	50	8	60	X		X	XXXX	B7	05.0050-7.3
60	50	8	60		X	X	XXXX	B7	05.0050-7.3
65	55	7.6	65	X		X	XXXX	B7	05.0055-7
70	60	8	70	X		X	XXXX	B7	05.0060-7.3
75	63	8	75	X		X	XXXX	B7	06.0063-7.3
80	65	12.5	80	X		X	XXXX	B7	07.5065-11.4
80	70	7.6	80	X		X	XXXX	B7	05.0070-7.0
80	70	9.5	80	X		X	XXXX	B7	05.0070-8.6
120	100	16	120	X		X	XXXX	B7	10.0100-14.5

*If used with wear rings, refer to wear ring piston diameter, see Section 9.

NOTE: For sizes larger than those shown in the table, please contact your local Parker Seal representative.

Parker Hannifin Corporation
Engineered Polymer Systems Division
Phone: 801 972 3000

UP Profile, Industrial U-cup Piston Seal

The UP profile is a non-symmetrical, hydraulic piston seal. The knife trimmed, beveled lip faces the bore to provide enhanced low to high pressure sealing and wiping action. The UP profile is a uni-directional seal. Two UP seals can be used, back to back, in separate grooves to provide bi-directional pressure sealing. The UP profile is an economical choice, available in Parker's wear and extrusion resistant Molythane compound.

Technical Data

Standard Materials*	Temperature Range	Pressure Range†	Surface Speed
P4615A90	-65°F to 200°F (-54°C to 93°C)	5,000 psi (344 bar)	< 1.6 ft/s (0.5 m/s)

***Alternate Materials:** For applications that may require an alternate material, please contact your local Parker Seal representative.

†**Pressure Range** without wear rings (see Table 2-4, page 2-5).

UP Cross-Section

UP installed in Piston Gland

Parker Hannifin Corporation
Engineered Polymer Systems Division
Phone: 801 972 3000

Part Number Nomenclature — UP Profile

Table 7-20. UP Profile — Inch

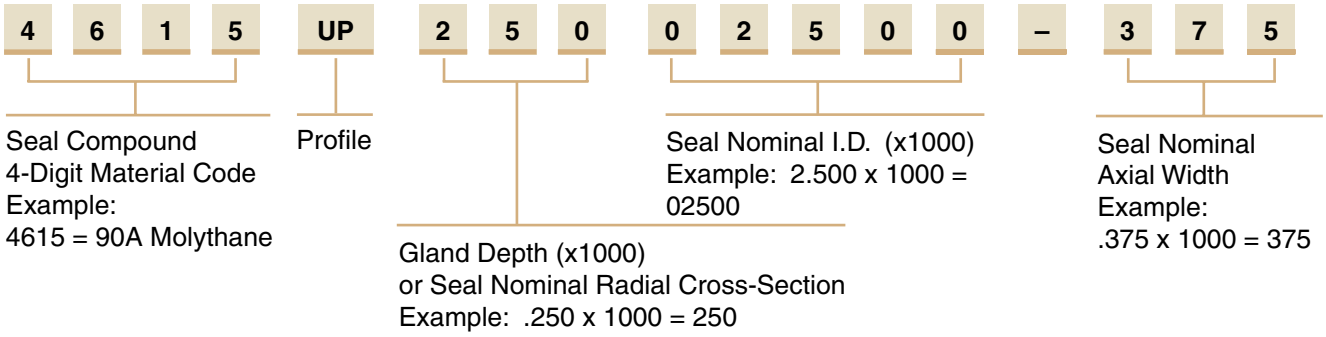

Gland Dimensions — UP Profile

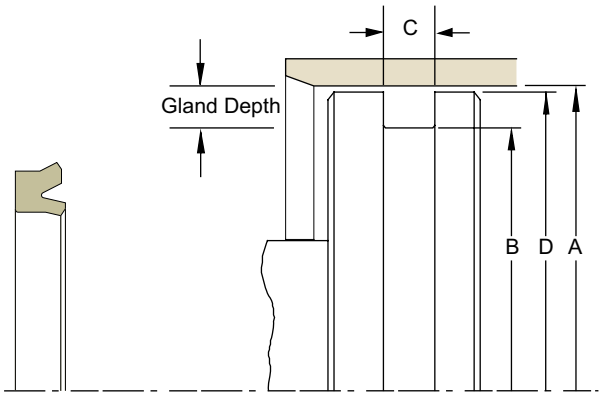

Table 7-21. Gland Dimension Tolerances

Nominal Gland Depth	A Bore Diameter	B Groove Diameter	C Groove Width	D Piston Diameter
1/8	+.002/-.000	+.000/-.002	+.015/-.000	+.000/-.001
3/16	+.002/-.000	+.000/-.002		+.000/-.002
1/4	+.003/-.000	+.000/-.003		+.000/-.002
5/16	+.003/-.000	+.000/-.004		+.000/-.002
3/8	+.004/-.000	+.000/-.005		+.000/-.002

7

Please refer to Engineering Section 2, Page 2-8 for surface finish and additional hardware considerations.

Table 7-22. UP Gland Dimensions — Inch

A Bore Diameter	B Groove Diameter	C Groove Width	D Piston Diameter*	Part Number
0.750	0.500	0.206	0.749	**4615UP12500500-187**
0.750	0.500	0.275	0.749	**4615UP12500500-250**
1.250	1.000	0.206	1.249	**4615UP12501000-187**
1.500	1.000	0.413	1.499	**4615UP25001000-375**
1.625	1.250	0.343	1.624	**4615UP18701250-312**
1.750	1.250	0.413	1.749	**4615UP25001250-375**
2.000	1.500	0.413	1.999	**4615UP25001500-375**
2.000	1.625	0.343	1.999	**4615UP18701625-312**
2.000	1.625	0.413	1.999	**4615UP18701625-375**
2.500	1.875	0.550	2.498	**4615UP31201875-500**
2.500	2.000	0.413	2.499	**4615UP25002000-375**
2.500	2.125	0.343	2.499	**4615UP18702125-312**
2.500	2.125	0.413	2.499	**4615UP18702125-375**
2.625	2.125	0.413	2.624	**4615UP25002125-375**
2.750	2.250	0.413	2.749	**4615UP25002250-375**
3.000	2.375	0.550	2.998	**4615UP31202375-500**

*If used with wear rings, refer to wear ring piston diameter, see Section 9.

Parker Hannifin Corporation
Engineered Polymer Systems Division
Phone: 801 972 3000

Table 7-22. UP Gland Dimensions — Inch (Continued)

A Bore Diameter	B Groove Diameter	C Groove Width	D Piston Diameter*	Part Number
3.000	2.500	0.413	2.999	**4615UP25002500-375**
3.250	2.750	0.413	3.249	**4615UP25002750-375**
3.250	2.875	0.413	3.249	**4615UP18702875-375**
3.500	2.875	0.550	3.498	**4615UP31202875-500**
3.500	3.000	0.413	3.499	**4615UP25003000-375**
3.750	3.000	0.688	3.748	**4615UP37503000-625**
3.750	3.125	0.550	3.748	**4615UP31203125-500**
3.750	3.250	0.413	3.749	**4615UP25003250-375**
4.000	3.250	0.688	3.998	**4615UP37503250-625**
4.000	3.375	0.550	3.998	**4615UP31203375-500**
4.000	3.500	0.413	3.999	**4615UP25003500-375**
4.000	3.625	0.413	3.999	**4615UP18703625-375**
4.250	3.750	0.413	4.249	**4615UP25003750-375**
4.500	3.750	0.688	4.498	**4615UP37503750-625**
4.500	4.000	0.413	4.499	**4615UP25004000-375**
5.000	4.250	0.688	4.998	**4615UP37504250-625**
5.000	4.375	0.618	4.998	**4615UP31204375-562**
5.000	4.500	0.413	4.999	**4615UP25004500-375**
5.000	4.500	0.618	4.999	**4615UP25004500-562**
5.500	5.000	0.413	5.499	**4615UP25005000-375**
5.500	5.000	0.618	5.499	**4615UP25005000-562**
6.000	5.250	0.688	5.998	**4615UP37505250-625**
6.000	5.500	0.413	5.999	**4615UP25005500-375**
6.500	5.750	0.688	6.498	**4615UP37505750-625**
7.000	6.250	0.688	6.998	**4615UP37506250-625**
7.500	6.750	0.688	7.498	**4615UP37506750-625**
9.000	8.250	0.688	8.998	**4615UP37508250-625**

*If used with wear rings, refer to wear ring piston diameter, see Section 9.

NOTE: For sizes larger than those shown in the table, please contact your local Parker Seal representative.

Parker Hannifin Corporation
Engineered Polymer Systems Division
Phone: 801 972 3000

E4 Profile, Premium Rounded Lip U-cup Piston Seal

Parker's E4 profile is a non-symmetrical piston seal designed to seal both lubricated and non-lubricated air. To ensure that critical surfaces retain lubrication, the radius edge of the lip is designed to hydroplane over pre-lubricated surfaces. The standard compound for the E4 profile is Parker proprietary Nitroxile ELF compound N4274A85. This compound is formulated with proprietary internal lubricants to provide "Extreme Low Friction" and excellent wear resistance. This compound provides extended cycle life over standard nitrile and carboxylated nitrile compounds.

E4 Cross-Section

Technical Data

Standard Materials*	Temperature Range	Pressure Range†	Surface Speed
N4274A85	-10°F to 250°F (-23°C to 121°C)	250 psi (17 bar)	< 3 ft/s (1 m/s)
N4180A80	-40°F to 250°F (-40°C to 121°C)	250 psi (17 bar)	< 3 ft/s (1 m/s)
V4208A90	-5°F to 400°F (-21°C to 204°C)	250 psi (17 bar)	< 3 ft/s (1 m/s)
P5065A88	-70°F to 200°F (-57°C to 93°C)	250 psi (17 bar)	< 3 ft/s (1 m/s)

***Alternate Materials:** For applications that may require an alternate material, please contact your local Parker Seal representative.

†Pressure Range without wear rings (see Table 2-4, page 2-5).

E4 installed in Piston Gland

Parker Hannifin Corporation
Engineered Polymer Systems Division
Phone: 801 972 3000

Part Number Nomenclature — E4 Profile

Table 7-23. E4 Profile — Inch

4	2	7	4	E4	0	6	0	2	1	2	5

Seal Compound
4-Digit Material Code
Example: 4274 = 85A Niroxile

Profile

Gland Depth (xx/32") or Seal
Nominal Radial Cross-Section
Example: 06 = 6/32" or 0.187

Seal Nominal I.D. (x1000)
Example: 2.125 x 1000 = 02125

Gland Dimensions — E4 Profile

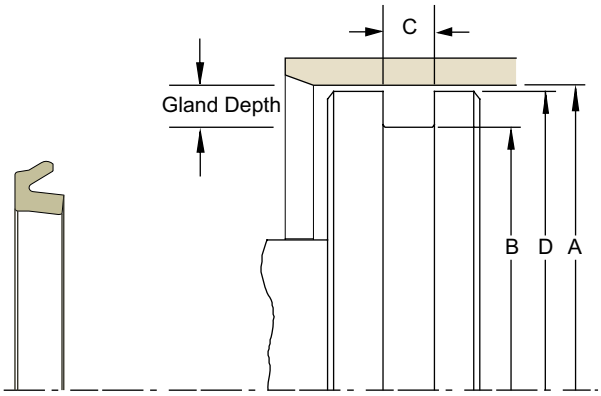

Please refer to Engineering Section 2, Page 2-8 for surface finish and additional hardware considerations.

Table 7-24. Gland Dimension Tolerances

Nominal Gland Depth	A Bore Diameter	B Groove Diameter	C Groove Width	D Piston Diameter
1/8	+.002/-.000	+.000/-.002	+.015/-.000	+.000/-.001
3/16	+.002/-.000	+.000/-.002		+.000/-.002
1/4	+.003/-.000	+.000/-.003		+.000/-.002
5/16	+.003/-.000	+.000/-.004		+.000/-.002
3/8	+.004/-.000	+.000/-.005		+.000/-.002
7/16	+.005/-.000	+.000/-.006		+.000/-.002
1/2	+.005/-.000	+.000/-.007		+.000/-.003
9/16	+.006/-.000	+.000/-.008		+.000/-.003
5/8	+.006/-.000	+.000/-.009		+.000/-.003
3/4	+.007/-.000	+.000/-.010		+.000/-.004
7/8	+.008/-.000	+.000/-.011		+.000/-.005
1	+.009/-.000	+.000/-.012		+.000/-.005

Table 7-25. E4 Gland Dimensions — Inch

A Bore Diameter	B Groove Diameter	C Groove Width	D Piston Diameter*	Compound Code				Part Number	
				4180	4274	4208	5065	Compound Code	
0.625	0.375	0.156	0.623	X	X		X	**XXXX**	**E40400375**
0.750	0.500	0.156	0.748	X	X			**XXXX**	**E40400500**
0.875	0.625	0.156	0.873	X	X			**XXXX**	**E40400625**
1.000	0.750	0.156	0.998	X	X		X	**XXXX**	**E40400750**
1.062	0.812	0.156	1.060	X				**XXXX**	**E40400812**
1.125	0.875	0.156	1.123	X	X			**XXXX**	**E40400875**
1.500	1.250	0.156	1.498		X			**XXXX**	**E40401250**
1.500	1.187	0.188	1.498	X	X	X	X	**XXXX**	**E40501187**
1.500	1.000	0.281	1.497		X			**XXXX**	**E40801000**
1.625	1.312	0.188	1.623		X			**XXXX**	**E40501312**
1.750	1.375	0.219	1.748	X	X			**XXXX**	**E40601375**
1.813	1.500	0.188	1.811	X				**XXXX**	**E40501500**
2.000	1.625	0.219	1.998	X	X	X	X	**XXXX**	**E40601625**
2.125	1.750	0.219	2.123		X			**XXXX**	**E40601750**
2.500	2.125	0.219	2.498	X	X	X	X	**XXXX**	**E40602125**
3.000	2.562	0.250	2.998	X	X	X	X	**XXXX**	**E40702562**
3.250	2.812	0.250	3.248	X	X	X		**XXXX**	**E40702812**
4.000	3.500	0.281	3.997	X	X		X	**XXXX**	**E40803500**

*If used with wear rings, refer to wear ring piston diameter, see Section 9.

Parker Hannifin Corporation
Engineered Polymer Systems Division
Phone: 801 972 3000

Table 7-25. E4 Gland Dimensions — Inch (Continued)

A Bore Diameter	B Groove Diameter	C Groove Width	D Piston Diameter*	Compound Code				Part Number	
				4180	4274	4208	5065	Compound Code	
5.000	4.500	0.281	4.997	X		X		**XXXX**	**E40804500**
5.000	4.437	0.312	4.997		X			**XXXX**	**E40904437**
6.000	5.500	0.281	5.997		X			**XXXX**	**E40805500**
6.000	5.437	0.312	5.997		X			**XXXX**	**E40905437**
6.000	5.375	0.344	5.997		X			**XXXX**	**E41005375**
8.000	7.375	0.344	7.997		X			**XXXX**	**E41007375**
8.000	7.250	0.406	7.997		X			**XXXX**	**E41207250**
10.000	9.312	0.375	9.997		X			**XXXX**	**E41109312**

*If used with wear rings, refer to wear ring piston diameter, see Section 9.

NOTE: For sizes larger than those shown in the table, please contact your local Parker Seal representative.

Part Number Nomenclature — E4 Profile

Table 7-26. E4 Profile — Metric

M 2 7 4 — Seal Compound
4-Digit Material Code
(First digit "4" replaced with "M" for Metric)
Example:
M274 = 85A Niroxile ELF

E4 — Profile

0 5 . 5 — Gland Depth (mm) or Seal Nominal Radial Cross-Section
Example: 05.5 = 5.5mm

-

0 5 3 — Seal Nominal I.D. (mm)
Example: 020 = 20mm

7 — Seal Nominal Axial Width (mm)
Example: 7 = 7mm

7

Gland Dimensions — E4 Profile

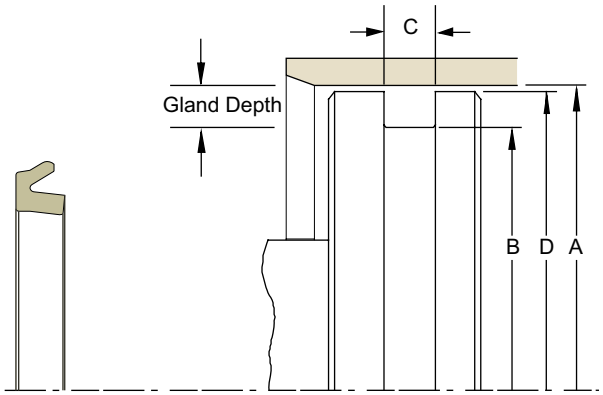

Please refer to Engineering Section 2, Page 2-8 for surface finish and additional hardware considerations.

Table 7-27. E4 Gland Dimensions — Metric (mm)

A Bore Diameter	B Groove Diameter	C Groove Width	D Piston Diameter*	Compound Code				Part Number	
				4180	4274	4208	5065	Compound Code	
H11	**h9**	**+0.20/-.00**	**f8**						
43	33	7.5	43		X			**XXXX**	**E405.0033-7**
45	37	4.5	45		X			**XXXX**	**E404.0037-4**
63	53	7.5	63		X			**XXXX**	**E405.0053-7**
200	190	15	200			X		**XXXX**	**E405.0190-14**

*If used with wear rings, refer to wear ring piston diameter, see Section 9.

NOTE: For sizes larger than those shown in the table, please contact your local Parker Seal representative.

09/01/07

Parker Hannifin Corporation
Engineered Polymer Systems Division
Phone: 801 972 3000
www.parkerseals.com

BMP Profile, Rounded Lip Seal with Bumper Cushion

The Parker BMP profile is a low friction bumper and seal providing quiet deceleration and reduced end stroke noise in pneumatic piston applications. Designed to mount on the ends of the piston and to be used along with Parker's V6 profile cushion seal, the bumper pad absorbs the final inertia which prevents contact between the piston and tube ends. The BMP profile can also be used without cushion seals in less critical applications. The BMP profile has a rounded sealing edge which hydroplanes over pre-lubricated surfaces extending cycle life and reducing friction. The BMP profile is available in Parker proprietary Nitroxile compound, offering low friction and wear resistance, as well as fluorocarbon for extended temperature range.

Technical Data

Standard Materials*	Temperature Range	Pressure Range†	Surface Speed
N4274A85	-10°F to 250°F (-23°C to 121°C)	250 psi (17 bar)	< 3 ft/s (1 m/s)
V4208A90	-5°F to 400°F (-21°C to 204°C)	250 psi (17 bar)	< 3 ft/s (1 m/s)

***Alternate Materials:** For applications that may require an alternate material, please contact your local Parker Seal representative.

†Pressure Range without wear rings (see Table 2-4, page 2-5).

BMP Cross-Section

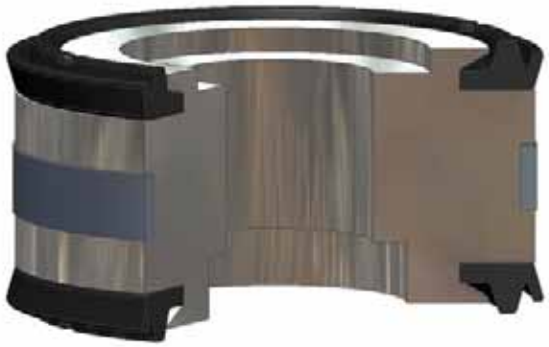

BMP installed in Piston Gland

Parker Hannifin Corporation
Engineered Polymer Systems Division
Phone: 801 972 3000

Part Number Nomenclature — BMP Profile

Table 7-28. BMP Profile — Inch

4	2	7	4	BMP	2	5	0	0	-	3	7	5

Seal Compound
4-Digit Material Code
Example:
4274 = 85A Nitroxile

Profile

Bore Diameter or Nominal Seal O.D. (x1000)
Example:
2.500 x 1000 = 2500

Seal Nominal Axial Width
Example:
.375 x 1000 = 375

Gland Dimensions — BMP Profile

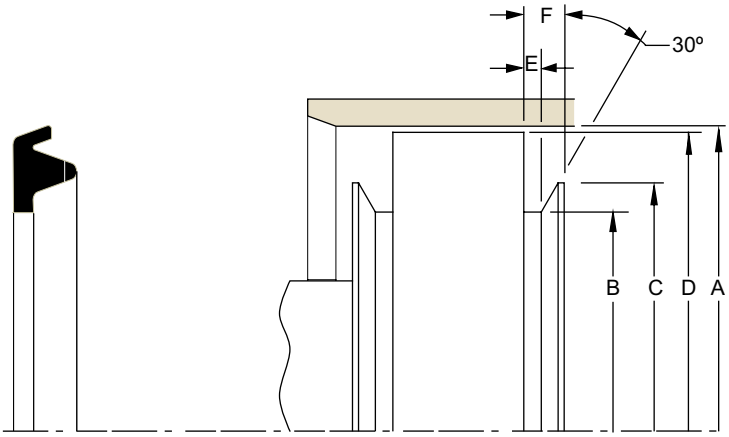

Please refer to Engineering Section 2, Page 2-8 for surface finish and additional hardware considerations.

Table 7-29. BMP Gland Dimensions — Inch

A Bore Diameter	B Groove Diameter	C Shoulder Diameter	D Piston Diameter*	E Groove Width	F Shoulder Height	Compound Codes		Part Number	
						4274	4208	Compound Code	
+.002/-.000	+.000-/.005	+.000/-.005	+.000/-.002	+.005-/.000	+.005/-.000				
1.125	0.639	0.851	1.123	0.110	0.204	X	X	XXXX	BMP1125-312
1.500	0.810	1.050	1.498	0.138	0.256	X	X	XXXX	BMP1500-312
2.000	1.202	1.440	1.998	0.138	0.256	X	X	XXXX	BMP2000-312
2.500	1.640	1.925	2.498	0.157	0.315	X	X	XXXX	BMP2500-375
3.250	2.150	2.550	3.248	0.157	0.315	X	X	XXXX	BMP3250-375
4.000	2.810	3.268	3.998	0.157	0.315	X	X	XXXX	BMP4000-375
5.000	3.525	4.095	4.998	0.157	0.315	X	X	XXXX	BMP5000-500

*If used with wear rings, refer to wear ring piston diameter, see Section 9.
NOTE: For sizes larger than those shown in the table, please contact your local Parker Seal representative.

Parker Hannifin Corporation
Engineered Polymer Systems Division
Phone: 801 972 3000

TP Profile (Piston T-seal), Compact Seal with Anti-Extrusion Technology

Parker's Piston T-seal is designed to retrofit o-rings in no back-up, single back-up and two back-up standard industrial reciprocating glands. Its compact design provides improved stability and extrusion resistance in dynamic fluid sealing applications. The flange or base of the T-seal forms a tight seal in the gland and supports the anti-extrusion back-up rings. When energized, the back-up rings bridge the extrusion gap to protect the rubber sealing element from extrusion and system contamination. The Piston T-seal eliminates the spiral or twisting failure that can occur when o-rings are used against a dynamic surface. Parker offers the Piston T-seal in a variety of elastomer and back-up ring compounds to cover a wide range of fluid compatibility, pressure and temperature.

Profile **TP0** for **no** back-up o-ring gland (standard offering)
Profile **TPS** for **single** back-up o-ring gland
Profile **TPT** for **two** back-up o-ring gland

The TP profile is sold only as an assembly (elastomer and back-up).

Technical Data

Standard Materials

TP Cross-Section

Base Elastomer*	Temperature Range	Surface Speed
N4115A75	-40°F to 225°F (-40°C to 107°C)	< 1.6 ft/s (0.5 m/s)
N4274A85	-10°F to 250°F (-23°C to 121°C)	< 1.6 ft/s (0.5 m/s)
V4205A75	-20°F to 400°F (-29°C to 204°C)	< 1.6 ft/s (0.5 m/s)
E4259A80	-65°F to 300°F (-54°C to 149°C)	< 1.6 ft/s (0.5 m/s

***Alternate Materials:** For applications that may require an alternate material, please see Section 3 for alternate elastomer materials.

TP installed in Piston Gland

Parker Hannifin Corporation
Engineered Polymer Systems Division
Phone: 801 972 3000

Technical Data (Continued)

Standard Materials

Back-up Rings**	Temperature Range	Pressure Range†
B001 Nylatron	-65°F to 250°F (-54°C to 121°C)	5,000 psi (344 bar)
B011 Virgin PTFE	-20°F to 250°F (-29°C to 121°C)	3,000 psi (206 bar)
B085 PEEK	-65°F to 500°F (-54°C to 260°C)	10,000 psi (689 bar)

****Alternate Materials:** For applications that may require an alternate material, please see Section 3 for T-seal back-up materials.

†Pressure Range without wear rings (see Table 2-4, page 2-5).

Part Number Nomenclature — T-seal Profile

Table 7-30. T-seal Profile — Inch

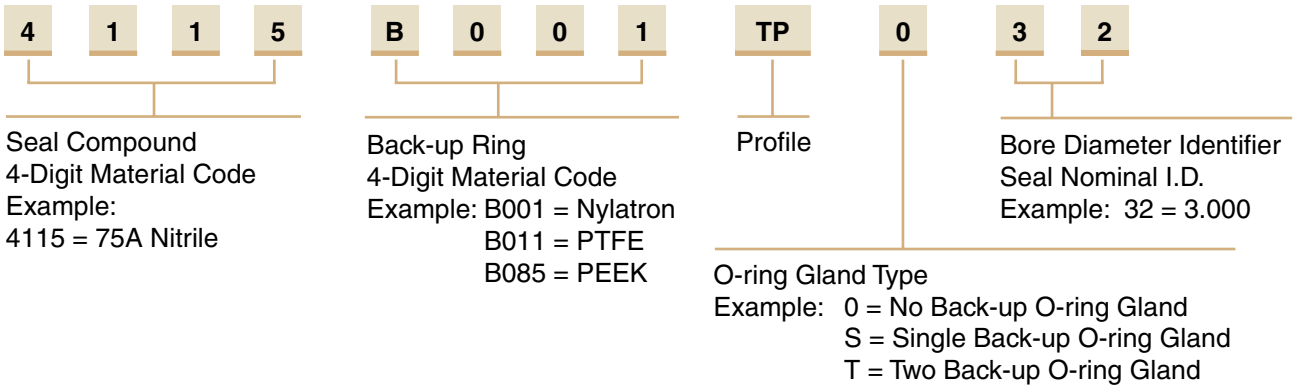

7

Gland Dimensions — TP Profile

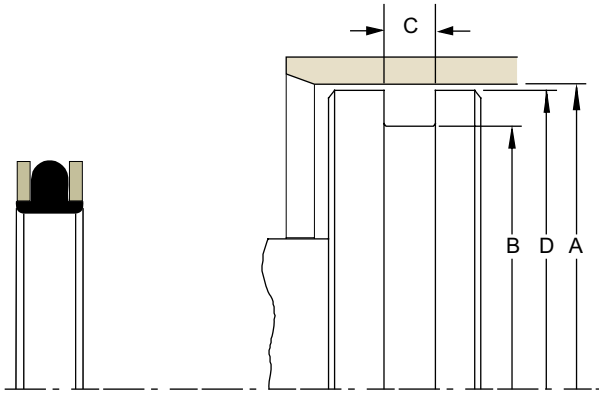

Please refer to Engineering Section 2, Page 2-8 for surface finish and additional hardware considerations.

Table 7-31. TP Gland Dimensions — Inch

A Bore Diameter	B Groove Diameter	C TP0 Groove Width	C TPS Groove Width	C TPT Groove Width	D Piston Diameter*	Ref. O-ring Dash Number	Compound Code 4115	Compound Code 4274	Compound Code 4205	Compound Code 4259	Part Number Compound Code	Part Number Back-up Ring Code	Part Number Groove Width Code**	Part Number Size Code
+.002/ -.000	+.000/ -.002	+.005/ -.000	+.005/ -.000	+.005/ -.000	+.000/ -.001									
0.374	0.198	0.140	0.171	0.238	0.372	106	X		X		**XXXX**	**B0xx**	**TP0**	**01**
0.437	0.261	0.140	0.171	0.238	0.435	108	X		X		**XXXX**	**B0xx**	**TP0**	**02**
0.499	0.323	0.140	0.171	0.238	0.497	109	X		X		**XXXX**	**B0xx**	**TP0**	**03**
0.562	0.320	0.187	0.208	0.275	0.559	203	X		X		**XXXX**	**B0xx**	**TP0**	**04**

* If used with wear rings, refer to wear ring piston diameter, see Section 9.
**Chart reflects availability for TP0 only. For availability of TPS and TPT contact your local Parker Seal representative.

09/01/07

Parker Hannifin Corporation
Engineered Polymer Systems Division
Phone: 801 972 3000
www.parkerseals.com

Table 7-31. TP Gland Dimensions — Inch (Continued)

A Bore Diameter	B Groove Diameter	C			D Piston Diameter*	Ref. O-ring Dash Number	Compound Code				Part Number			
		TP0 Groove Width	TPS Groove Width	TPT Groove Width			4115	4274	4205	4259	Compound Code	Back-up Ring Code	Groove Width Code**	Size Code
+.002/ -.000	+.000/ -.002	+.005/ -.000	+.005/ -.000	+.005/ -.000	+.000/ -.001									
0.625	0.383	0.187	0.208	0.275	0.662	204	X		X		XXXX	B0xx	TP0	05
0.687	0.445	0.187	0.208	0.275	0.684	205	X		X		XXXX	B0xx	TP0	06
0.750	0.508	0.187	0.208	0.275	0.747	206	X		X	X	XXXX	B0xx	TP0	07
0.812	0.570	0.187	0.208	0.275	0.809	207	X		X		XXXX	B0xx	TP0	08
0.875	0.633	0.187	0.208	0.275	0.872	208	X		X	X	XXXX	B0xx	TP0	09
0.937	0.695	0.187	0.208	0.275	0.934	209	X				XXXX	B0xx	TP0	10
1.000	0.758	0.187	0.208	0.275	0.997	210	X	X	X	X	XXXX	B0xx	TP0	11
1.062	0.820	0.187	0.208	0.275	1.059	211	X		X	X	XXXX	B0xx	TP0	12
1.125	0.833	0.187	0.208	0.275	1.122	212	X	X	X	X	XXXX	B0xx	TP0	13
1.187	0.945	0.187	0.208	0.275	1.184	213	X		X		XXXX	B0xx	TP0	14
1.250	1.008	0.187	0.208	0.275	1.247	214	X		X		XXXX	B0xx	TP0	15
1.312	1.070	0.187	0.208	0.275	1.309	215	X		X		XXXX	B0xx	TP0	16
1.375	1.133	0.187	0.208	0.275	1.372	216	X		X	X	XXXX	B0xx	TP0	17
1.437	1.195	0.187	0.208	0.275	1.434	217	X		X		XXXX	B0xx	TP0	18
1.500	1.258	0.187	0.208	0.275	1.497	218	X	X	X	X	XXXX	B0xx	TP0	19
1.562	1.320	0.187	0.208	0.275	1.559	219	X				XXXX	B0xx	TP0	20
1.625	1.383	0.187	0.208	0.275	1.622	220	X	X	X		XXXX	B0xx	TP0	21
1.750	1.508	0.187	0.208	0.275	1.747	222	X	X	X	X	XXXX	B0xx	TP0	22
1.875	1.505	0.281	0.311	0.410	1.872	325	X	X	X	X	XXXX	B0xx	TP0	23
2.000	1.630	0.281	0.311	0.410	1.997	326	X	X	X	X	XXXX	B0xx	TP0	24
2.125	1.755	0.281	0.311	0.410	2.122	327	X		X	X	XXXX	B0xx	TP0	25
2.250	1.880	0.281	0.311	0.410	2.247	328	X		X		XXXX	B0xx	TP0	26
2.375	2.005	0.281	0.311	0.410	2.372	329	X		X		XXXX	B0xx	TP0	27
2.500	2.130	0.281	0.311	0.410	2.497	330	X	X	X	X	XXXX	B0xx	TP0	28
2.625	2.255	0.281	0.311	0.410	2.622	331	X		X	X	XXXX	B0xx	TP0	29
2.750	2.380	0.281	0.311	0.410	2.747	332	X		X		XXXX	B0xx	TP0	30
2.875	2.505	0.281	0.311	0.410	2.872	333	X		X	X	XXXX	B0xx	TP0	31
3.000	2.630	0.281	0.311	0.410	2.997	334	X	X	X		XXXX	B0xx	TP0	32
3.125	2.755	0.281	0.311	0.410	3.122	335	X		X		XXXX	B0xx	TP0	33
3.250	2.880	0.281	0.311	0.410	3.247	336	X	X	X	X	XXXX	B0xx	TP0	34
3.500	3.130	0.281	0.311	0.410	3.497	338	X	X	X	X	XXXX	B0xx	TP0	35
3.625	3.255	0.281	0.311	0.410	3.622	339	X		X		XXXX	B0xx	TP0	36
3.750	3.380	0.281	0.311	0.410	3.747	340	X		X		XXXX	B0xx	TP0	37
3.875	3.505	0.281	0.311	0.410	3.872	341	X		X		XXXX	B0xx	TP0	38
4.000	3.630	0.281	0.311	0.410	3.997	342	X	X	X	X	XXXX	B0xx	TP0	39
4.125	3.755	0.281	0.311	0.410	4.122	343	X		X	X	XXXX	B0xx	TP0	40
4.250	3.880	0.281	0.311	0.410	4.247	344	X	X	X		XXXX	B0xx	TP0	41
4.375	4.005	0.281	0.311	0.410	4.372	345	X		X		XXXX	B0xx	TP0	42
4.500	4.130	0.281	0.311	0.410	4.497	346	X	X	X	X	XXXX	B0xx	TP0	43
4.625	4.255	0.281	0.311	0.410	4.622	347	X				XXXX	B0xx	TP0	44
4.750	4.380	0.281	0.311	0.410	4.747	348	X	X	X	X	XXXX	B0xx	TP0	45
4.875	4.505	0.281	0.311	0.410	4.872	349	X		X		XXXX	B0xx	TP0	46
5.002	4.630	0.281	0.311	0.410	4.997	350	X	X	X		XXXX	B0xx	TP0	47
5.127	4.653	0.375	0.408	0.538	5.123	426	X		X		XXXX	B0xx	TP0	48
5.252	4.778	0.375	0.408	0.538	5.248	427	X	X	X		XXXX	B0xx	TP0	49
5.377	4.903	0.375	0.408	0.538	5.373	428	X	X	X		XXXX	B0xx	TP0	50

* If used with wear rings, refer to wear ring piston diameter, see Section 9.
**Chart reflects availability for TP0 only. For availability of TPS and TPT contact your local Parker Seal representative.

Parker Hannifin Corporation
Engineered Polymer Systems Division
Phone: 801 972 3000

Table 7-31. TP Gland Dimensions — Inch (Continued)

A Bore Diameter	B Groove Diameter	C			D Piston Diameter*	Ref. O-ring Dash Number	Compound Code				Part Number			
		TP0 Groove Width	TPS Groove Width	TPT Groove Width			4115	4274	4205	4259	Compound Code	Back-up Ring Code	Groove Width Code**	Size Code
+.002/ -.000	+.000/ -.002	+.005/ -.000	+.005/ -.000	+.005/ -.000	+.000/ -.001									
5.502	5.028	0.375	0.408	0.538	5.498	429	X	X		X	**XXXX**	**B0xx**	**TP0**	**51**
5.627	5.153	0.375	0.408	0.538	5.623	430	X				**XXXX**	**B0xx**	**TP0**	**52**
5.752	5.278	0.375	0.408	0.538	5.748	431	X	X	X	X	**XXXX**	**B0xx**	**TP0**	**53**
5.877	5.403	0.375	0.408	0.538	5.873	432	X				**XXXX**	**B0xx**	**TP0**	**54**
6.002	5.528	0.375	0.408	0.538	5.998	433	X	X	X		**XXXX**	**B0xx**	**TP0**	**55**
6.127	5.653	0.375	0.408	0.538	6.123	434	X				**XXXX**	**B0xx**	**TP0**	**56**
6.252	5.778	0.375	0.408	0.538	6.248	435	X				**XXXX**	**B0xx**	**TP0**	**57**
6.502	6.028	0.375	0.408	0.538	6.498	437	X		X		**XXXX**	**B0xx**	**TP0**	**58**
6.752	6.278	0.375	0.408	0.538	6.748	438	X		X		**XXXX**	**B0xx**	**TP0**	**59**
7.002	6.528	0.375	0.408	0.538	6.998	439	X		X		**XXXX**	**B0xx**	**TP0**	**60**
7.252	6.778	0.375	0.408	0.538	7.248	440	X		X		**XXXX**	**B0xx**	**TP0**	**61**
7.502	7.028	0.375	0.408	0.538	7.498	441	X			X	**XXXX**	**B0xx**	**TP0**	**62**
7.752	7.278	0.375	0.408	0.538	7.748	442	X				**XXXX**	**B0xx**	**TP0**	**63**
8.002	7.528	0.375	0.408	0.538	7.998	443	X	X	X		**XXXX**	**B0xx**	**TP0**	**64**
8.252	7.778	0.375	0.408	0.538	8.248	444	X				**XXXX**	**B0xx**	**TP0**	**65**
8.502	8.028	0.375	0.408	0.538	8.498	445	X		X		**XXXX**	**B0xx**	**TP0**	**66**
9.002	8.528	0.375	0.408	0.538	8.998	446	X				**XXXX**	**B0xx**	**TP0**	**67**
9.502	9.028	0.375	0.408	0.538	9.498	447	X				**XXXX**	**B0xx**	**TP0**	**68**
10.002	9.528	0.375	0.408	0.538	9.998	448	X				**XXXX**	**B0xx**	**TP0**	**69**
10.502	10.028	0.375	0.408	0.538	10.498	449	X				**XXXX**	**B0xx**	**TP0**	**70**
11.002	10.528	0.375	0.408	0.538	10.998	450	X				**XXXX**	**B0xx**	**TP0**	**71**
11.502	11.028	0.375	0.408	0.538	11.498	451	X				**XXXX**	**B0xx**	**TP0**	**72**
12.002	11.528	0.375	0.408	0.538	11.998	452	X		X		**XXXX**	**B0xx**	**TP0**	**73**
14.002	13.528	0.375	0.408	0.538	13.998	456	X			X	**XXXX**	**B0xx**	**TP0**	**77**
15.502	15.028	0.375	0.408	0.538	15.498	459	X				**XXXX**	**B0xx**	**TP0**	**80**
16.002	15.528	0.375	0.408	0.538	15.998	460	X			X	**XXXX**	**B0xx**	**TP0**	**81**
17.002	16.528	0.375	0.408	0.538	16.998	462	X				**XXXX**	**B0xx**	**TP0**	**83**
17.502	17.028	0.375	0.408	0.538	17.498	463	X				**XXXX**	**B0xx**	**TP0**	**84**
24.002	23.528	0.375	0.408	0.538	23.998	N/A	X		X	X	**XXXX**	**B0xx**	**TP0**	**97**

* If used with wear rings, refer to wear ring piston diameter, see Section 9.
**Chart reflects availability for TP0 only. For availability of TPS and TPT contact your local Parker Seal representative.
NOTE: For sizes larger than those shown in the table, please contact your local Parker Seal representative.

Parker Hannifin Corporation
Engineered Polymer Systems Division
Phone: 801 972 3000

Piston Seal
S5 Profile

S5 Profile, Square PTFE Cap Seal

The Parker S5 profile is a bi-directional piston seal for use in low to medium duty hydraulic actuators and is suitable for sealing against hardened surfaces in pneumatic applications. The S5 profile is a two piece design comprised of a standard size Parker o-ring energizing a glass-filled PTFE cap. The S5 profile offers long wear, low friction and because of its short assembly length requires minimal gland space on the piston. The seal is commonly used in applications such as agriculture hydraulics, mobile hydraulics, machine tools, and hydraulic presses. Parker's S5 profile will retrofit non-Parker seals of similar design and is an updated version of the Parker S5000 piston seal.

The S5 profile may be ordered without the energizer by omitting the energizer code. See part number nomenclature.

Technical Data

Standard Materials*		Temperature Range	Pressure Range†	Surface Speed
Cap				
0203	15% fiberglass filled PTFE	-200°F to 575°F (-129°C to 302°C)	3500 psi (241 bar)	< 13 ft/s (4 m/sec)
Energizer				
A	70A Nitrile	-30°F to 250°F (-34°C to 121°C)		

***Alternate Materials:** For applications that may require an alternate material, please see Section 3 for alternate PTFE (Table 3-4) and energizer (Table 3-5) materials.

†**Pressure Range** without wear rings (see Table 2-4, page 2-5).

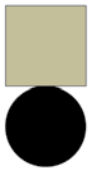

S5 Cross-Section

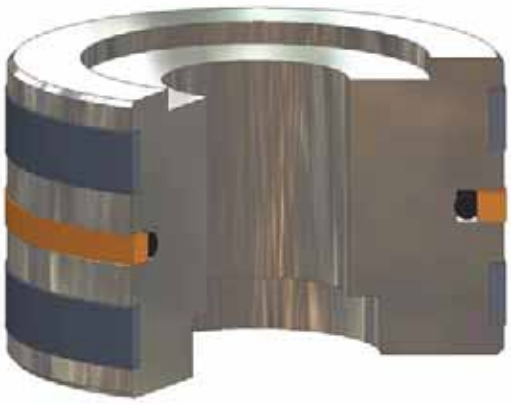

S5 installed in Piston Gland

Parker Hannifin Corporation
Engineered Polymer Systems Division
Phone: 801 972 3000

Technical Data (Continued)

Options

Split Rings: To aid in installation, the PTFE ring can be supplied in one of the following split configurations. To indicate that the S5 profile is to be split, add the appropriate split type indicator to the end of the part number.

S = Step Cut
T = Butt Cut
V = Bevel cut

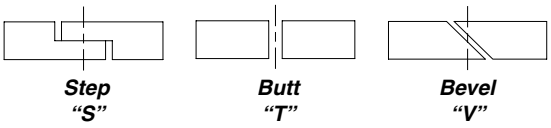

Metric: To configure metric part numbering, see Table 7-34 on page 7-38, and call your local Parker Seal representative for availability.

Part Number Nomenclature — S5 Profile

Table 7-32. S5 Profile — Inch

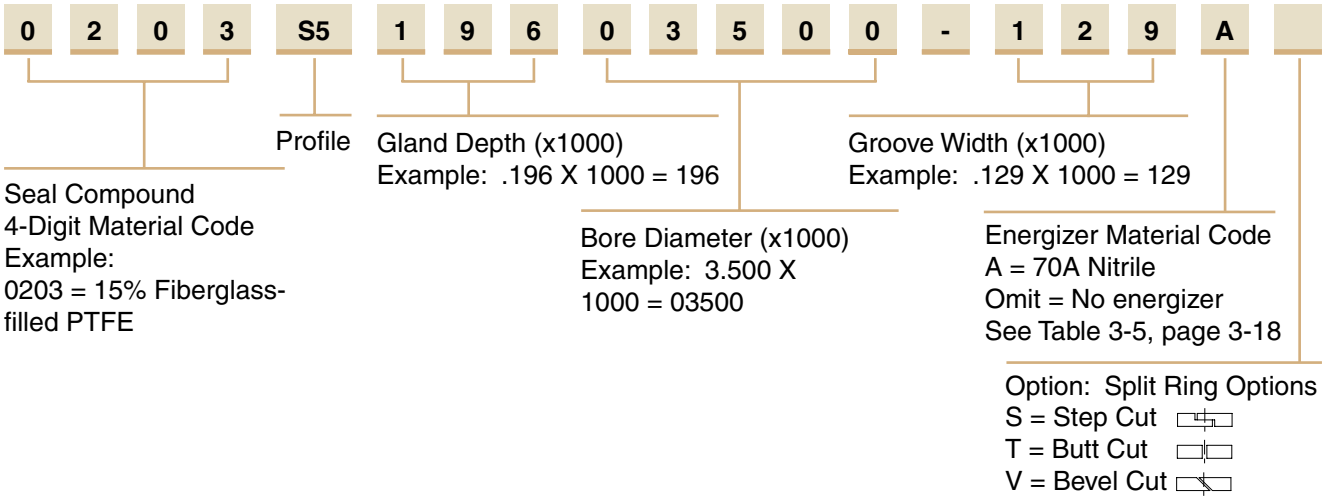

Gland Dimensions — S5 Profile

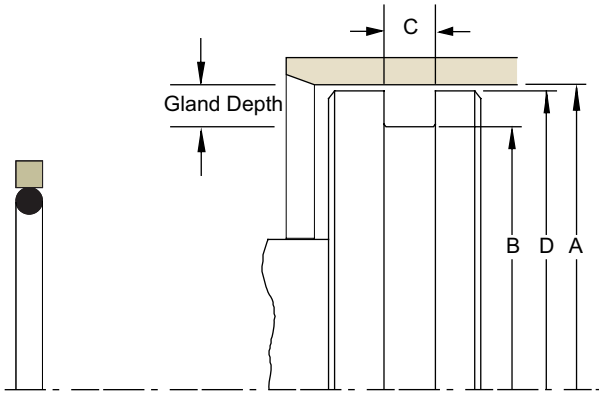

Please refer to Engineering Section 2, Page 2-8 for surface finish and additional hardware considerations.

Table 7-33. S5 Gland Dimensions — Inch

A Bore Diameter	B Groove Diameter	C Groove Width	D Piston Diameter*	O-ring Dash Number	Part Number
+.002/-.000	+.001/-.001	+.002/-.002	+.000/-.002		
0.500	0.240	0.083	0.499	009	**0203S513000500-083A**
0.625	0.365	0.083	0.624	011	**0203S513000625-083A**
0.750	0.490	0.083	0.749	013	**0203S513000750-083A**

*If used with wear rings, refer to wear ring piston diameter, see Section 9.

09/01/07

Parker Hannifin Corporation
Engineered Polymer Systems Division
Phone: 801 972 3000

Table 7-33. S5 Gland Dimensions — Inch (Continued)

A Bore Diameter	B Groove Diameter	C Groove Width	D Piston Diameter*	O-ring Dash Number	Part Number
+.002/-.000	+.001/-.001	+.002/-.002	+.000/-.002		
0.875	0.615	0.083	0.874	016	**0203S513000875-083A**
1.000	0.740	0.083	0.999	017	**0203S513001000-083A**
1.125	0.865	0.083	1.124	019	**0203S513001125-083A**
1.250	0.990	0.083	1.249	022	**0203S513001250-083A**
1.375	1.115	0.083	1.374	022	**0203S513001375-083A**
1.500	1.240	0.083	1.499	025	**0203S513001500-083A**
+.002/-.000	+.002/-.002	+.002/-.002	+.000/-.002		
1.625	1.233	0.122	1.624	123	**0203S519601625-122A**
1.750	1.358	0.122	1.749	125	**0203S519601750-122A**
1.875	1.483	0.122	1.874	127	**0203S519601875-122A**
+.003/-.000	+.002/-.002	+.003/-.003	+.000/-.003		
2.000	1.608	0.130	1.999	129	**0203S519602000-130A**
2.125	1.733	0.130	2.14	131	**0203S519602125-130A**
2.250	1.858	0.130	2.249	133	**0203S519602250-130A**
2.375	1.983	0.130	2.374	135	**0203S519602375-130A**
2.500	2.108	0.130	2.499	137	**0203S519602500-130A**
2.625	2.233	0.130	2.624	139	**0203S519602625-130A**
2.750	2.358	0.130	2.749	141	**0203S519602750-130A**
2.875	2.483	0.130	2.874	143	**0203S519602875-130A**
3.000	2.608	0.130	2.999	145	**0203S519603000-130A**
3.250	2.858	0.130	3.249	149	**0203S519603250-130A**
3.375	2.983	0.130	3.374	150	**0203S519603375-130A**
3.500	3.108	0.130	3.499	151	**0203S519603500-130A**
3.625	3.233	0.130	3.624	152	**0203S519603625-130A**
3.750	3.358	0.130	3.749	152	**0203S519603750-130A**
4.000	3.608	0.130	3.999	153	**0203S519604000-130A**
4.250	3.858	0.130	4.249	154	**0203S519604250-130A**
4.500	4.108	0.130	4.499	155	**0203S519604500-130A**
4.750	4.358	0.130	4.749	156	**0203S519604750-130A**
4.875	4.483	0.130	4.874	156	**0203S519604875-130A**
5.000	4.608	0.130	4.999	157	**0203S519605000-130A**
5.250	4.858	0.130	5.249	158	**0203S519605250-130A**
5.500	5.108	0.130	5.499	159	**0203S519605500-130A**
+.004/-.000	+.003/-.003	+.004/-.004	+.000/-.003		
5.750	5.232	0.160	5.748	251	**0203S525905750-160A**
5.875	5.357	0.160	5.873	252	**0203S525905875-160A**
6.000	5.482	0.160	5.998	253	**0203S525906000-160A**
6.250	5.732	0.160	6.248	255	**0203S525906250-160A**
6.500	5.982	0.160	6.498	257	**0203S525906500-160A**
6.750	6.232	0.160	6.748	258	**0203S525906750-160A**
7.000	6.482	0.160	6.998	259	**0203S525907000-160A**
7.125	6.607	0.160	7.123	260	**0203S525907125-160A**
7.250	6.732	0.160	7.248	260	**0203S525907250-160A**
7.500	6.982	0.160	7.498	261	**0203S525907500-160A**
7.750	7.232	0.160	7.748	262	**0203S525907750-160A**
8.000	7.482	0.160	7.998	263	**0203S525908000-160A**
8.250	7.732	0.160	8.248	264	**0203S525908250-160A**
8.500	7.982	0.160	8.498	265	**0203S525908500-160A**
8.750	8.232	0.160	8.748	266	**0203S525908750-160A**
9.000	8.482	0.160	8.998	267	**0203S525909000-160A**

*If used with wear rings, refer to wear ring piston diameter, see Section 9.

Parker Hannifin Corporation
Engineered Polymer Systems Division
Phone: 801 972 3000

Table 7-33. S5 Gland Dimensions — Inch (Continued)

A Bore Diameter	B Groove Diameter	C Groove Width	D Piston Diameter*	O-ring Dash Number	Part Number
+.004/-.000	+.003/-.003	+.004/-.004	+.000/-.003		
9.250	8.732	0.160	9.248	268	**0203S525909250-160A**
9.500	8.982	0.160	9.498	269	**0203S525909500-160A**
9.750	9.232	0.160	9.748	270	**0203S525909750-160A**
10.000	9.482	0.160	9.998	271	**0203S525910000-160A**
10.250	9.732	0.160	10.248	272	**0203S525910250-160A**
10.500	9.982	0.160	10.498	273	**0203S525910500-160A**
10.750	10.232	0.160	10.748	274	**0203S525910750-160A**
11.000	10.482	0.160	10.998	275	**0203S525911000-160A**
11.500	10.982	0.160	11.498	276	**0203S525911500-160A**
12.000	11.482	0.160	11.998	277	**0203S525912000-160A**
12.500	11.982	0.160	12.498	278	**0203S525912500-160A**
13.000	12.482	0.160	12.998	278	**0203S525913000-160A**
14.000	13.482	0.160	13.998	279	**0203S525914000-160A**
15.000	14.482	0.160	14.998	280	**0203S525915000-160A**
16.000	15.482	0.160	15.998	281	**0203S525916000-160A**

*If used with wear rings, refer to wear ring piston diameter, see Section 9.

NOTE: For sizes larger than those shown in the table, please contact your local Parker Seal representative.

Part Number Nomenclature — S5 Profile

Table 7-34. S5 Profile — Metric (mm)

7

M 2 0 3 S5 0 7 . 7 2 0 0 - 6 . 3 A

Seal Compound
4-Digit Material Code
(First digit "0" replaced with "M" for Metric)
Example:
M203 = 15% Fiberglass-filled PTFE

Profile

Gland Depth (mm)
Example: 07.7 = 7.7mm

Bore Diameter (mm)
(3 digits; use leading zeros if needed)
Example:
002 = 2mm
020 = 20mm
200 = 200mm

Groove Width (mm)
Example: 6.3 = 6.3mm

Energizer Material Code
A = 70A Nitrile
Omit = No energizer

Option: Split Ring Options
S = Step Cut
T = Butt Cut
V = Bevel Cut

Parker Hannifin Corporation
Engineered Polymer Systems Division
Phone: 801 972 3000

R5 Profile, Rectangular PTFE Cap Seal

The Parker R5 profile is a bi-directional piston seal for use in medium to heavy duty hydraulic actuators and is suitable for sealing against hardened surfaces in pneumatic applications. The R5 profile is a two piece design comprised of a standard size rubber square ring energizing a rectangular shaped PTFE cap. The R5 profile offers excellent stability, long wear, low friction and extrusion protection. The seal is commonly used in applications such as agriculture hydraulics, mobile hydraulics, machine tools and hydraulic presses. Parker's R5 profile will retrofit non-Parker seals of similar design and is an updated version of the Parker R5100 piston seal.

The R5 profile may be ordered without the energizer by omitting the energizer code. See part number nomenclature.

Technical Data

Standard Materials*		Temperature Range	Pressure Range†	Surface Speed
Cap				
0203	15% fiberglass filled PTFE	-200°F to 575°F (-129°C to 302°C)	3500 psi (241 bar)	< 13 ft/s (4 m/sec)
Energizer				
A	70A Nitrile	-30°F to 250°F (-34°C to 121°C)		

****Alternate Materials:** For applications that may require an alternate material, please see Section 3 for alternate PTFE (Table 4) and energizer (Table 3-5) materials.

†Pressure Range without wear rings (see Table 2-4, page 2-5).

R5 Cross-Section

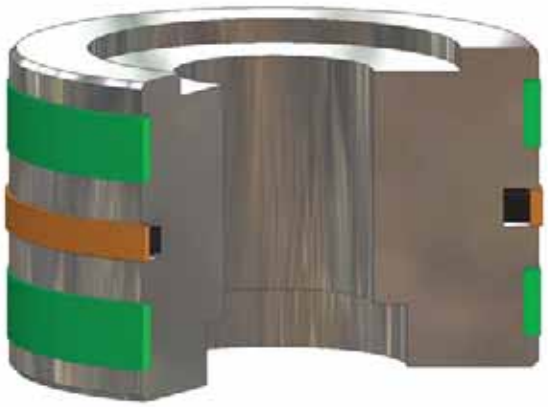

R5 installed in Piston Gland

Parker Hannifin Corporation
Engineered Polymer Systems Division
Phone: 801 972 3000

Technical Data (Continued)

Options

Split Rings: To aid in installation, the PTFE ring can be supplied in one of the following split configurations. To indicate that the R5 profile is to be split, add the appropriate split type indicator to the end of the part number.

S = Step Cut
T = Butt Cut
V = Bevel cut

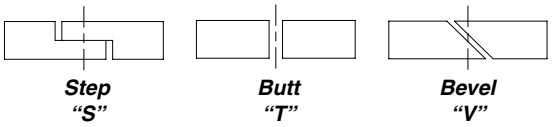

Metric: To configure metric part numbering, see Table 7-37 on page 7-42, and call your local Parker Seal representative for availability.

Part Number Nomenclature — R5 Profile

Table 7-35. R5 Profile — Inch

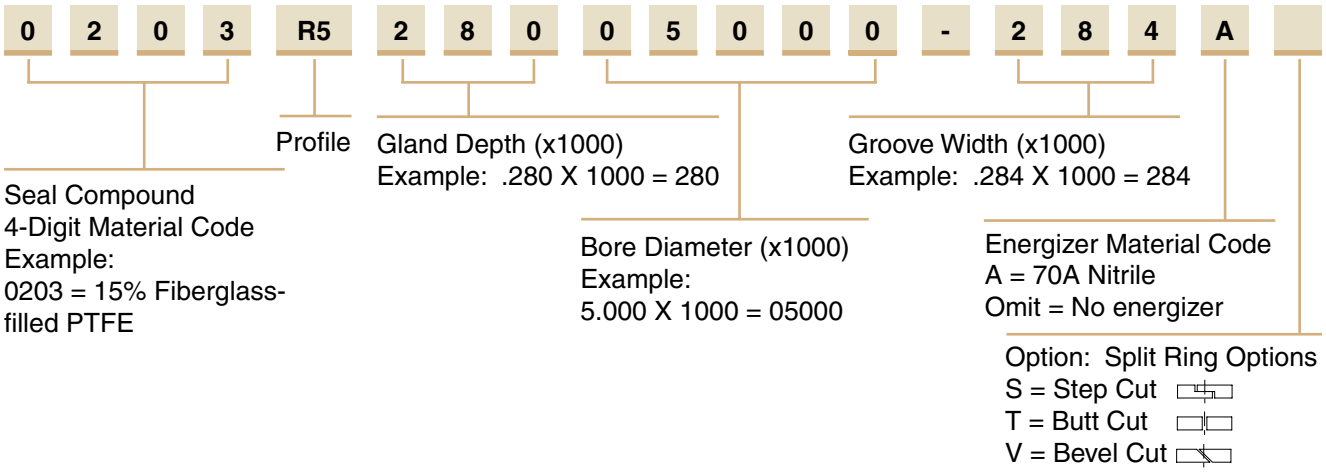

7

Gland Dimensions — R5 Profile

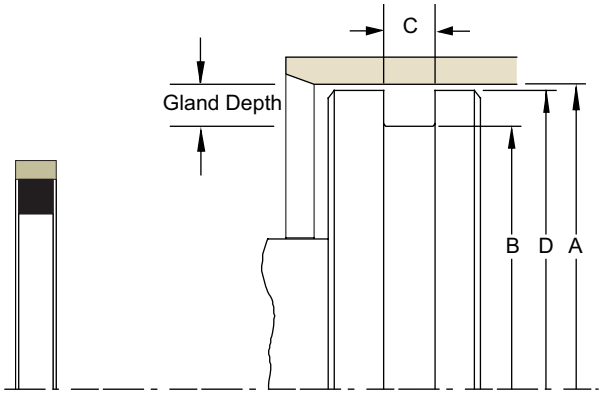

Please refer to Engineering Section 2, Page 2-8 for surface finish and additional hardware considerations.

Table 7-36. R5 Gland Dimensions — Inch

A Bore Diameter	B Groove Diameter	C Groove Width	D Piston Diameter*	O-ring Dash Number	Part Number
+.002/-.000	+.001/-.001	+.002/-.002	+.000/-.001		
1.000	0.692	0.129	0.999	115	**0203R515501000-129A**
1.250	0.942	0.129	1.249	119	**0203R515501250-129A**
1.500	1.192	0.129	1.499	123	**0203R515501500-129A**

*If used with wear rings, refer to wear ring piston diameter, see Section 9.

09/01/07

Parker Hannifin Corporation
Engineered Polymer Systems Division
Phone: 801 972 3000

Table 7-36. R5 Gland Dimensions — Inch (Continued)

A Bore Diameter	B Groove Diameter	C Groove Width	D Piston Diameter*	O-ring Dash Number	Part Number
+.002/-.000	+.001/-.001	+.002/-.002	+.000/-.001		
1.750	1.442	0.129	1.749	127	**0203R515501750-129A**
2.000	1.692	0.129	1.999	131	**0203R515502000-129A**
2.250	1.942	0.129	2.249	135	**0203R515502250-129A**
2.500	2.192	0.129	2.499	139	**0203R515502500-129A**
2.750	2.442	0.129	2.749	143	**0203R515502750-129A**
+.003/-.000	+.002/-.002	+.003/-.003	+.000/-.002		
3.000	2.444	0.284	2.998	333	**0203R528003000-284A**
3.250	2.694	0.284	3.248	335	**0203R528003250-284A**
3.500	2.944	0.284	3.498	337	**0203R528003500-284A**
3.750	3.194	0.284	3.748	339	**0203R528003750-284A**
4.000	3.444	0.284	3.998	341	**0203R528004000-284A**
4.125	3.569	0.284	4.123	342	**0203R528004125-284A**
4.250	3.694	0.284	4.248	343	**0203R528004250-284A**
4.500	3.944	0.284	4.498	345	**0203R528004500-284A**
4.750	4.194	0.284	4.748	347	**0203R528004750-284A**
5.000	4.444	0.284	4.998	349	**0203R528005000-284A**
+.004/-.000	+.003/-.003	+.004/-.004	+.000/-.003		
5.250	4.488	0.379	5.247	425	**0203R538105250-379A**
5.500	4.738	0.379	5.497	427	**0203R538105500-379A**
5.750	4.988	0.379	5.747	429	**0203R538105750-379A**
6.000	5.238	0.379	5.997	431	**0203R538106000-379A**
6.250	5.488	0.379	6.247	433	**0203R538106250-379A**
6.500	5.738	0.379	6.497	435	**0203R538106500-379A**
6.750	5.988	0.379	6.747	437	**0203R538106750-379A**
7.000	6.238	0.379	6.997	438	**0203R538107000-379A**
7.250	6.488	0.379	7.247	439	**0203R538107250-379A**
7.500	6.738	0.379	7.497	440	**0203R538107500-379A**
7.750	6.988	0.379	7.747	441	**0203R538107750-379A**
8.000	7.238	0.379	7.997	442	**0203R538108000-379A**
8.250	7.488	0.379	8.247	443	**0203R538108250-379A**
8.500	7.738	0.379	8.497	444	**0203R538108500-379A**
+.004/-.000	+.004/-.004	+.004/-.004	+.000/-.004		
9.000	8.122	0.379	8.996	445	**0203R543909000-379A**
9.500	8.622	0.379	9.496	446	**0203R543909500-379A**
10.000	9.122	0.379	9.996	447	**0203R543910000-379A**
11.000	10.122	0.379	10.996	449	**0203R543911000-379A**
12.000	11.122	0.379	11.996	451	**0203R543912000-379A**
13.000	12.122	0.379	12.996	453	**0203R543913000-379A**
14.000	13.122	0.379	13.996	455	**0203R543914000-379A**

*If used with wear rings, refer to wear ring piston diameter, see Section 9.

NOTE: For sizes larger than those shown in the table, please contact your local Parker Seal representative.

Parker Hannifin Corporation
Engineered Polymer Systems Division
Phone: 801 972 3000

Part Number Nomenclature — R5 Profile

Table 7-37. R5 Profile — Metric (mm)

M	2	0	3	R5	0	7	.	7	2	0	0	-	6	.	3	A	

M203 — 4-Digit Material Code (First digit "0" replaced with "M" for Metric)
Example:
M203 = 15% Fiberglass-filled PTFE

R5 — Profile

07.7 — Gland Depth (mm)
Example: 07.7 = 7.7mm

200 — Bore Diameter (mm) (3 digits; use leading zeros if needed)
Example:
002 = 2mm
020 = 20mm
200 = 200mm

6.3 — Groove Width (mm)
Example: 6.3 = 6.3mm

A — Energizer Material Code
A = 70A Nitrile
Omit = No energizer

Blank — Option: Split Ring Options
S = Step Cut
T = Butt Cut
V = Bevel Cut

Parker Hannifin Corporation
Engineered Polymer Systems Division
Phone: 801 972 3000

CT Profile, Premium PTFE Cap Seal with Anti-Extrusion Technology

The Parker CT Profile is a robust design for heavy duty hydraulic applications. The CT Profile is an excellent choice for sealing mobile hydraulic applications that experience shock loads. The CT profile is a four piece assembly made up of a rubber energizer, PTFE cap and two back-up rings. In application, fluid pressure forces the rubber energizer to apply increased load against the PTFE cap and back-up rings. This results in increased sealing force against the bore and allows the back-up rings to close off the extrusion gap between the piston and the bore. Once activated by pressure, the back-up rings protect the seal from extruding and keep internal contamination away from the PTFE cap. Parker's CT profile will retrofit non-Parker seals of similar design.

The CT Profile is sold only as an assembly (seal and energizer). See part number nomenclature.

Technical Data

Standard Materials*		Temperature Range**	Surface Speed
Cap			
0401	40% bronze filled PTFE	-200°F to 575°F (-129°C to 302°C)	< 5 ft/s (1.5 m/sec)
Energizer			
A	70A Nitrile	-30°F to 250°F (-34°C to 121°C)	

CT Cross-Section Standard

***Alternate Materials:** For applications that may require an alternate material, please see Section 3 for alternate PTFE, energizer and back-up materials.

**The temperature range of the CT profile is limited to the energizer. A wider temperature range can be achieved by using alternate energizer and back-up ring compounds.

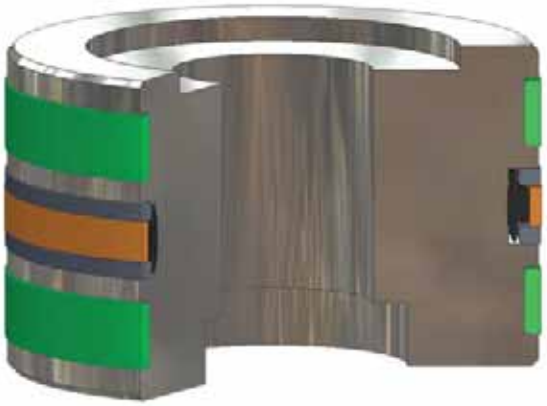

CT installed in Piston Gland

Parker Hannifin Corporation
Engineered Polymer Systems Division
Phone: 801 972 3000

Technical Data (Continued)

Standard Materials*

Back-up Rings		Temperature Range	Pressure Range†
B001	Nylatron	-65°F to 250°F (-44°C to 121°C)	7,500 psi (500 bar)

***Alternate Materials:** For applications that may require an alternate material, please see Section 3 for alternate PTFE, energizer and back-up materials.

†Pressure Range without wear rings (see Table 2-4, page 2-5).

Options

Metric: To configure metric part numbering, see Table 7-41 on page 7-47, and call your local Parker Seal representative for availability.

Part Number Nomenclature — CT Profile

Table 7-38. CT Profile — Inch

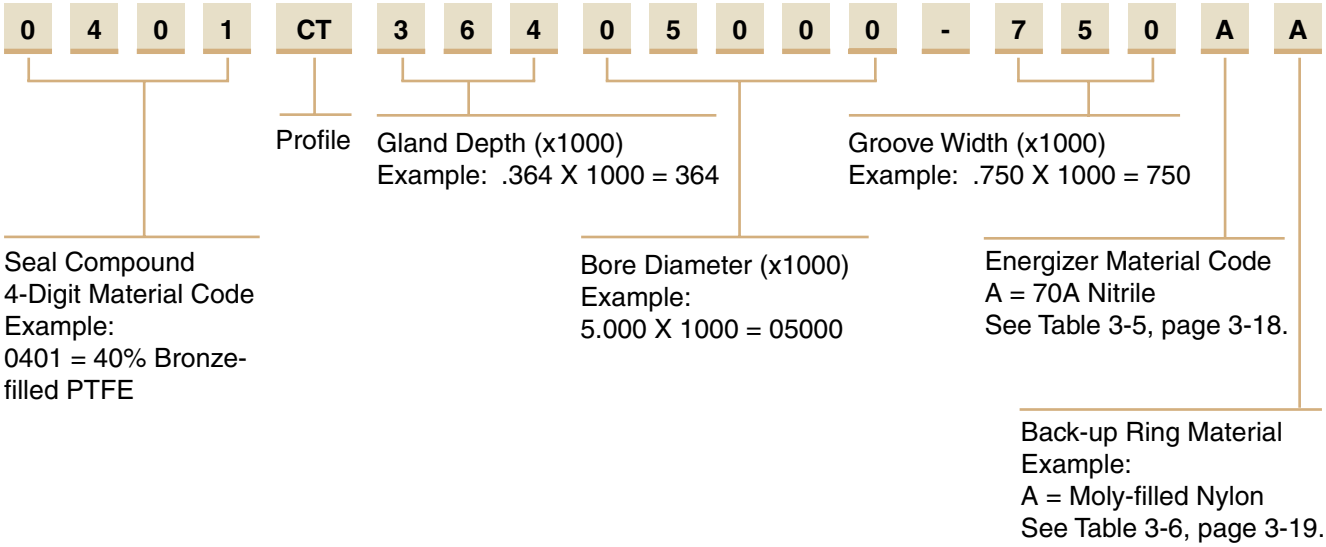

Parker Hannifin Corporation
Engineered Polymer Systems Division
Phone: 801 972 3000

Gland Dimensions — CT Profile

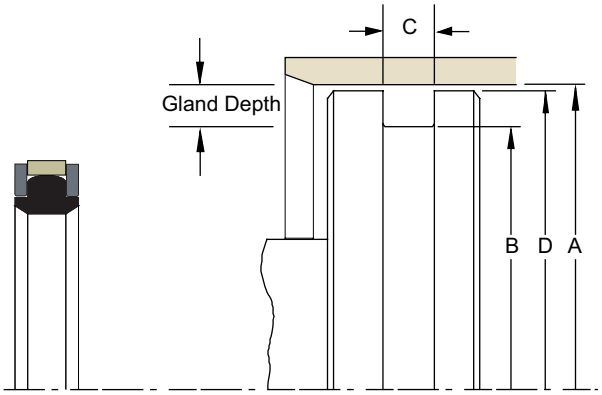

Please refer to Engineering Section 2, Page 2-8 for surface finish and additional hardware considerations.

Table 7-39. CT Gland Dimensions (Narrow Style) — Inch

A Bore Diameter	B Groove Diameter	C Groove Width	D Piston Diameter*	Part Number (Narrow Style)
+.002/-.000	+.000/-.002	+.010/-.000	+.000/-.002	
1.500	0.942	0.295	1.499	**0401CT27901500-295AA**
2.000	1.442	0.295	1.999	**0401CT27902000-295AA**
2.250	1.692	0.295	2.249	**0401CT27902250-295AA**
2.500	1.942	0.295	2.499	**0401CT27902500-295AA**
2.750	2.192	0.295	2.749	**0401CT27902750-295AA**
+.003/-.000	+.000/-.002	+.010/-.000	+.000/-.002	
3.000	2.442	0.420	2.998	**0401CT27903000-420AA**
3.250	2.692	0.420	3.248	**0401CT27903250-420AA**
3.500	2.942	0.420	3.498	**0401CT27903500-420AA**
3.750	3.192	0.420	3.748	**0401CT27903750-420AA**
4.000	3.442	0.420	3.998	**0401CT27904000-420AA**
4.250	3.692	0.420	4.248	**0401CT27904250-420AA**
4.500	3.942	0.420	4.498	**0401CT27904500-420AA**
4.750	4.192	0.420	4.748	**0401CT27904750-420AA**
5.000	4.442	0.420	4.998	**0401CT27905000-420AA**

*If used with wear rings, refer to wear ring piston diameter, see Section 9.

NOTE: For sizes larger than those shown in the table, please contact your local Parker Seal representative.

Table 7-40. CT Gland Dimensions (Standard Style) — Inch

A Bore Diameter	B Groove Diameter	C Groove Width	D Piston Diameter*	Part Number (Standard Style)
+.002/-.000	+.000/-.002	+.010/-.000	+.000/-.002	
1.000	0.628	0.424	0.999	**0401CT18601000-424AA**
1.063	0.691	0.424	1.062	**0401CT18601063-424AA**
1.125	0.753	0.424	1.124	**0401CT18601125-424AA**
1.188	0.816	0.424	1.187	**0401CT18601188-424AA**
1.250	0.878	0.424	1.249	**0401CT18601250-424AA**
1.313	0.941	0.424	1.312	**0401CT18601313-424AA**
1.375	1.003	0.424	1.374	**0401CT18601375-424AA**
1.438	1.066	0.424	1.437	**0401CT18601438-424AA**
1.500	1.128	0.424	1.499	**0401CT18601500-424AA**
1.563	1.191	0.424	1.562	**0401CT18601563-424AA**
1.625	1.253	0.424	1.624	**0401CT18601625-424AA**
1.688	1.316	0.424	1.687	**0401CT18601688-424AA**
1.750	1.378	0.424	1.749	**0401CT18601750-424AA**
1.875	1.503	0.424	1.874	**0401CT18601875-424AA**

*If used with wear rings, refer to wear ring piston diameter, see Section 9.

Parker Hannifin Corporation
Engineered Polymer Systems Division
Phone: 801 972 3000

Table 7-40. CT Gland Dimensions (Standard Style) — Inch (Continued)

A Bore Diameter	B Groove Diameter	C Groove Width	D Piston Diameter*	Part Number (Standard Style)
+.003/-.000	+.000/-.003	+.010/-.000	+.000/-.003	
2.000	1.628	0.424	1.999	0401CT18602000-424AA
2.125	1.753	0.424	2.124	0401CT18602125-424AA
2.250	1.878	0.424	2.249	0401CT18602250-424AA
2.375	2.003	0.424	2.374	0401CT18602375-424AA
2.500	2.128	0.424	2.499	0401CT18602500-424AA
2.625	2.253	0.424	2.624	0401CT18602625-424AA
2.750	2.378	0.424	2.749	0401CT18602750-424AA
2.875	2.503	0.424	2.874	0401CT18602875-424AA
+.004/-.000	+.000/-.003	+.010/-.000	+.000/-.003	
3.000	2.522	0.579	2.998	0401CT23903000-579AA
3.125	2.647	0.579	3.123	0401CT23903125-579AA
3.250	2.772	0.579	3.248	0401CT23903250-579AA
3.375	2.897	0.579	3.373	0401CT23903375-579AA
3.500	3.022	0.579	3.498	0401CT23903500-579AA
3.625	3.147	0.579	3.623	0401CT23903625-579AA
3.750	3.272	0.579	3.748	0401CT23903750-579AA
3.875	3.397	0.579	3.873	0401CT23903875-579AA
4.000	3.522	0.579	3.998	0401CT23904000-579AA
4.125	3.647	0.579	4.123	0401CT23904125-579AA
4.250	3.772	0.579	4.248	0401CT23904250-579AA
4.375	3.897	0.579	4.373	0401CT23904375-579AA
4.500	4.022	0.579	4.498	0401CT23904500-579AA
4.625	4.147	0.579	4.623	0401CT23904625-579AA
4.750	4.272	0.579	4.748	0401CT23904750-579AA
4.875	4.397	0.579	4.873	0401CT23904875-579AA
5.000	4.272	0.750	4.998	0401CT36405000-750AA
5.125	4.397	0.750	5.123	0401CT36405125-750AA
5.250	4.522	0.750	5.248	0401CT36405250-750AA
5.375	4.647	0.750	5.373	0401CT36405375-750AA
+.004/-.000	+.000/-.004	+.010/-.000	+.000/-.004	
5.500	4.772	0.750	5.497	0401CT36405500-750AA
5.625	4.897	0.750	5.622	0401CT36405625-750AA
5.750	5.022	0.750	5.747	0401CT36405750-750AA
5.875	5.147	0.750	5.872	0401CT36405875-750AA
6.000	5.272	0.750	5.997	0401CT36406000-750AA
6.125	5.397	0.750	6.122	0401CT36406125-750AA
6.250	5.522	0.750	6.247	0401CT36406250-750AA
6.375	5.647	0.750	6.372	0401CT36406375-750AA
6.500	5.772	0.750	6.497	0401CT36406500-750AA
6.750	6.022	0.750	6.747	0401CT36406750-750AA
7.000	6.272	0.750	6.997	0401CT36407000-750AA
+.005/-.000	+.000/-.004	+.010/-.000	+.000/-.004	
7.250	6.522	0.750	7.247	0401CT36407250-750AA
7.500	6.772	0.750	7.497	0401CT36407500-750AA
7.750	7.022	0.750	7.747	0401CT36407750-750AA
+.005/-.000	+.000/-.005	+.010/-.000	+.000/-.005	
8.000	7.272	0.750	7.996	0401CT36408000-750AA
8.250	7.522	0.750	8.246	0401CT36408250-750AA
8.500	7.772	0.750	8.496	0401CT36408500-750AA

*If used with wear rings, refer to wear ring piston diameter, see Section 9.

Parker Hannifin Corporation
Engineered Polymer Systems Division
Phone: 801 972 3000

Table 7-40. CT Gland Dimensions (Standard Style) — Inch (Continued)

A Bore Diameter	B Groove Diameter	C Groove Width	D Piston Diameter*	Part Number (Standard Style)
+.005/-.000	+.000/-.005	+.010/-.000	+.000/-.005	
8.750	8.022	0.750	8.746	**0401CT36408750-750AA**
9.000	8.272	0.750	8.996	**0401CT36409000-750AA**
9.500	8.772	0.750	9.496	**0401CT36409500-750AA**
10.000	9.272	0.750	9.996	**0401CT36410000-750AA**
10.500	9.772	0.750	10.496	**0401CT36410500-750AA**
11.000	10.272	0.750	10.996	**0401CT36411000-750AA**
11.500	10.772	0.750	11.496	**0401CT36411500-750AA**
12.000	11.272	0.750	11.996	**0401CT36412000-750AA**
+.006/-.000	+.000/-.005	+.010/-.000	+.000/-.005	
12.500	11.772	0.750	12.496	**0401CT36412500-750AA**
13.000	12.272	0.750	12.996	**0401CT36413000-750AA**
+.006/-.000	+.000/-.006	+.010/-.000	+.000/-.006	
13.500	12.772	0.750	13.495	**0401CT36413500-750AA**
14.000	13.272	0.750	13.995	**0401CT36414000-750AA**
14.500	13.772	0.750	14.495	**0401CT36414500-750AA**
15.000	14.272	0.750	14.995	**0401CT36415000-750AA**
15.500	14.772	0.750	15.495	**0401CT36415500-750AA**
16.000	15.272	0.750	15.995	**0401CT36416000-750AA**
16.500	15.772	0.750	16.495	**0401CT36416500-750AA**
17.000	16.272	0.750	16.995	**0401CT36417000-750AA**
17.500	16.772	0.750	17.495	**0401CT36417500-750AA**
18.000	17.272	0.750	17.995	**0401CT36418000-750AA**
18.500	17.772	0.750	18.495	**0401CT36418500-750AA**
19.000	18.272	0.750	18.995	**0401CT36419000-750AA**
19.500	18.772	0.750	19.495	**0401CT36419500-750AA**
20.000	19.272	0.750	19.995	**0401CT36420000-750AA**

*If used with wear rings, refer to wear ring piston diameter, see Section 9.

NOTE: For sizes larger than those shown in the table, please contact your local Parker Seal representative.

Part Number Nomenclature — CT Profile

Table 7-41. CT Profile — Metric (mm)

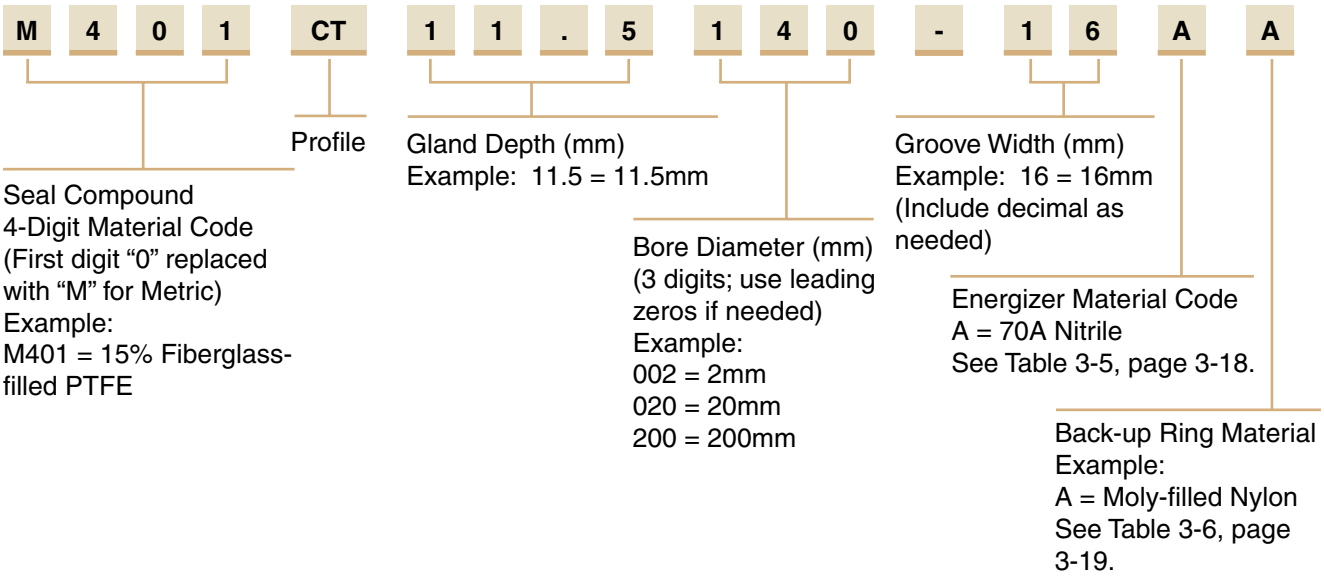

09/01/07

Parker Hannifin Corporation
Engineered Polymer Systems Division
Phone: 801 972 3000
www.parkerseals.com

CQ Profile, Premium PTFE Cap Seal with Anti-Drift Technology

The Parker CQ profile is a bi-directional piston seal for use in medium to heavy duty hydraulic applications. The CQ profile is a unique seal design that includes a rubber quad seal in the PTFE cap to ensure drift free performance. The PTFE cap is a stable rectangular shape and is energized, depending on its cross section, by a single square energizer or dual Parker o-rings. The CQ piston seal is commonly used in applications such as mobile hydraulics, lift trucks, standard cylinders and piston accumulators. Parker's CQ profile will retrofit non-Parker seals of similar design.

The CQ profile may be ordered without the energizer and quad seal by omitting the energizer/quad seal code. See part number nomenclature.

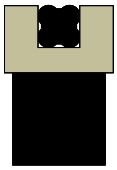

CQ Cross-Section Square Ring

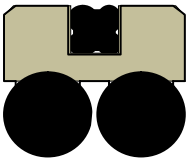

CQ Cross-Section dual O-ring

Technical Data

Standard Materials*		Temperature Range	Pressure Range†	Surface Speed
Cap				
0401	40% bronze filled PTFE		5000 psi (344 bar)	< 9.8 ft/s (3 m/sec)
Energizer/Quad Seal				
A	70A Nitrile	-30°F to 250°F (-34°C to 121°C)		

***Alternate Materials:** For applications that may require an alternate material, please see Section 3 for alternate PTFE (Table 3-4) and energizer (Table 3-5) materials.

†Pressure Range without wear rings (see Table 2-4, page 2-5).

Options

Notched Walls: Adding an "N" to the end of the part number indicates that notches are to be added to the side walls of the PTFE cap. Notches can help optimize the seal's response to fluid pressure. In application, the void created by the notch allows fluid pressure to fill the cavity between the side face of the gland and the seal. Consult your local Parker Seal representative for the availability and cost to add side notches to the CQ profile.

N = Notched walls 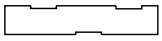

Metric: To configure metric part numbering, see Table 7-45 on page 7-52, and call your local Parker Seal representative for availability.

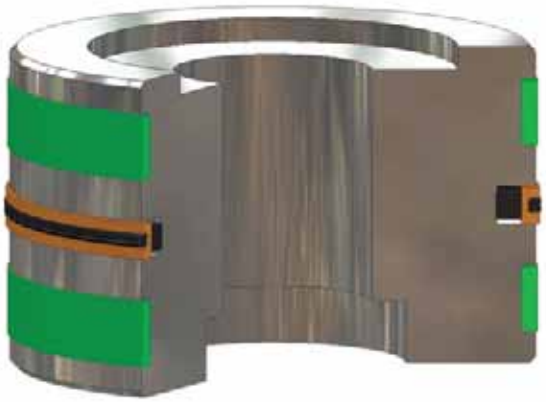

CQ installed in Piston Gland

Parker Hannifin Corporation
Engineered Polymer Systems Division
Phone: 801 972 3000

Part Number Nomenclature — CQ Profile

Table 7-42. CQ Profile — Inch

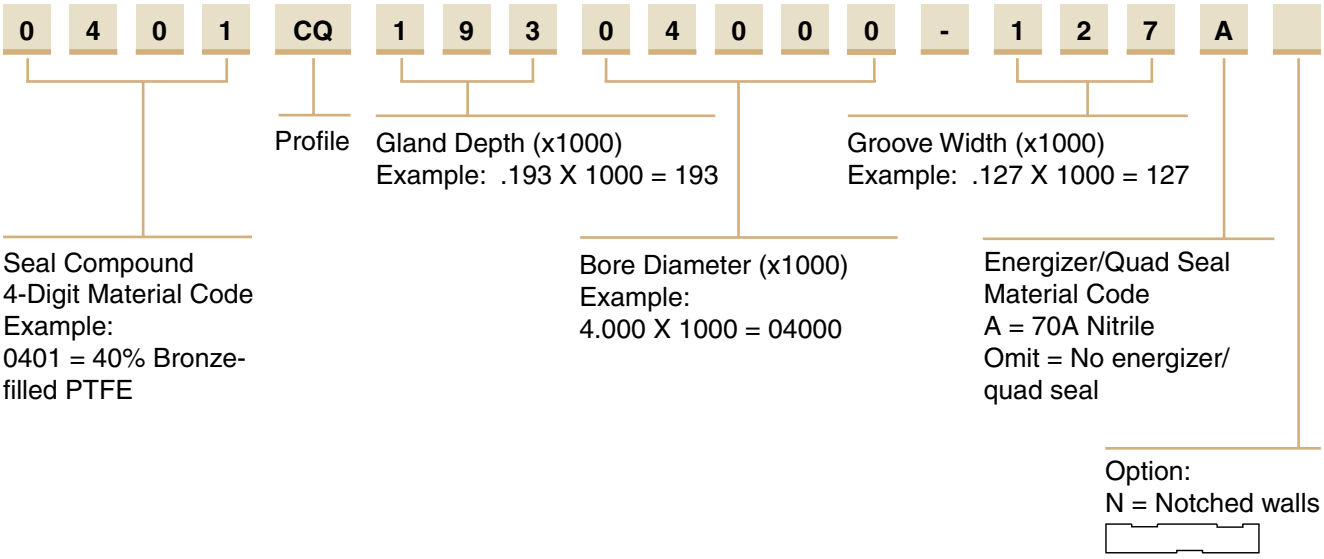

Gland Dimension — CQ Profile — Square Ring

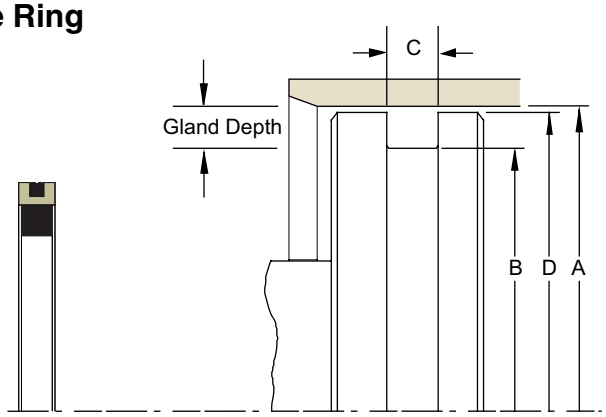

Please refer to Engineering Section 2, Page 2-8 for surface finish and additional hardware considerations.

Table 7-43. CQ Gland Dimensions (Square Ring) — Inch

A Bore Diameter	B Groove Diameter	C Groove Width	D Piston Diameter*	Quad Seal Dash Number	Square Ring Number	Part Number (Square Ring)
+.002/-.000	+.000/-.003	+.005/-.000	+.000/-.002			
1.500	0.884	0.288	1.499	125	316	**0401CQ30801500-288A**
2.000	1.384	0.288	1.999	133	324	**0401CQ30802000-288A**
2.250	1.634	0.288	2.249	136	326	**0401CQ30802250-288A**
2.500	1.884	0.288	2.499	140	328	**0401CQ30802500-288A**
2.750	2.134	0.288	2.749	145	330	**0401CQ30802750-288A**
3.000	2.384	0.288	2.999	148	332	**0401CQ30803000-288A**
3.250	2.634	0.288	3.249	151	334	**0401CQ30803250-288A**
3.500	2.884	0.288	3.499	152	336	**0401CQ30803500-288A**
3.750	3.134	0.288	3.749	153	338	**0401CQ30803750-288A**
4.000	3.384	0.288	3.999	154	340	**0401CQ30804000-288A**
4.250	3.634	0.288	4.249	155	342	**0401CQ30804250-288A**
4.500	3.884	0.288	4.499	156	344	**0401CQ30804500-288A**
4.750	4.134	0.288	4.749	157	346	**0401CQ30804750-288A**

*If used with wear rings, refer to wear ring piston diameter, see Section 9.

09/01/07

Parker Hannifin Corporation
Engineered Polymer Systems Division
Phone: 801 972 3000

Table 7-43. CQ Gland Dimensions (Square Ring) — Inch (Continued)

A Bore Diameter	B Groove Diameter	C Groove Width	D Piston Diameter*	Quad Seal Dash Number	Square Ring Number	Part Number (Square Ring)
+.004/-.000	+.000/-.006	+.005/-.000	+.000/-.004			
5.000	4.384	0.288	4.998	158	348	**0401CQ30805000-288A**
5.250	4.542	0.288	5.248	159	350	**0401CQ30805250-288A**
5.500	4.660	0.375	5.498	160	426	**0401CQ42005500-375A**
5.750	4.910	0.375	5.748	161	428	**0401CQ42005750-375A**
6.000	5.160	0.375	5.998	162	430	**0401CQ42006000-375A**
6.500	5.660	0.375	6.498	164	434	**0401CQ42006500-375A**
7.000	6.160	0.375	6.998	166	437	**0401CQ42007000-375A**
7.500	6.660	0.375	7.498	168	439	**0401CQ42007500-375A**
8.000	7.160	0.375	7.998	170	441	**0401CQ42008000-375A**
9.000	8.160	0.375	8.998	174	445	**0401CQ42009000-375A**
10.000	9.160	0.375	9.998	178	447	**0401CQ42010000-375A**

*If used with wear rings, refer to wear ring piston diameter, see Section 9.

NOTE: For sizes larger than those shown in the table, please contact your local Parker Seal representative.

Gland Dimension — CQ Profile — Dual O-ring

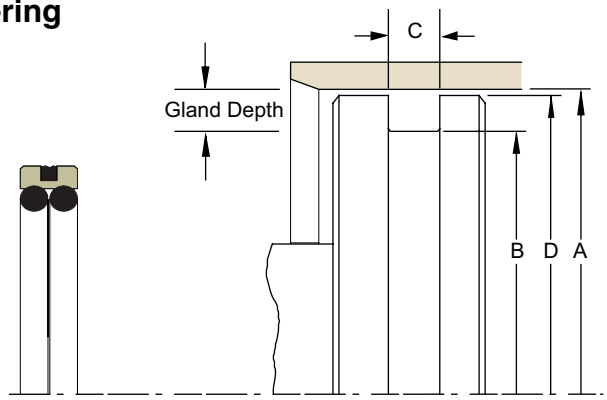

Please refer to Engineering Section 2, Page 2-8 for surface finish and additional hardware considerations.

Table 7-44. CQ Gland Dimensions (Dual O-ring) — Inch

A Bore Diameter	B Groove Diameter	C Groove Width	D Piston Diameter*	Quad Seal Dash Number	Dual O-ring Number	CQ Part Number (Dual O-ring)
+.002/-.000	+.000/-.003	+.005/-.000	+.000/-.002			
1.500	1.106	0.248	1.499	028	121	**0401CQ19701500-248A**
1.562	1.168	0.248	1.561	028	122	**0401CQ19701562-248A**
1.625	1.231	0.248	1.624	029	123	**0401CQ19701625-248A**
1.687	1.293	0.248	1.686	029	124	**0401CQ19701687-248A**
1.750	1.356	0.248	1.749	030	125	**0401CQ19701750-248A**
1.875	1.481	0.248	1.874	031	127	**0401CQ19701875-248A**
2.000	1.606	0.248	1.999	032	129	**0401CQ19702000-248A**
2.125	1.731	0.248	2.124	033	131	**0401CQ19702125-248A**
2.250	1.856	0.248	2.249	034	133	**0401CQ19702250-248A**
2.375	1.981	0.248	2.373	035	135	**0401CQ19702375-248A**
2.500	2.106	0.248	2.498	036	137	**0401CQ19702500-248A**
2.625	2.231	0.248	2.623	037	139	**0401CQ19702625-248A**
2.750	2.356	0.248	2.748	038	141	**0401CQ19702750-248A**
2.875	2.481	0.248	2.873	039	143	**0401CQ19702875-248A**
3.000	2.488	0.326	2.998	149	229	**0401CQ25603000-326A**

*If used with wear rings, refer to wear ring piston diameter, see Section 9.

Parker Hannifin Corporation
Engineered Polymer Systems Division
Phone: 801 972 3000

Table 7-44. CQ Gland Dimensions (Dual O-ring) — Inch (Continued)

A Bore Diameter	B Groove Diameter	C Groove Width	D Piston Diameter*	Quad Seal Dash Number	Dual O-ring Number	CQ Part Number (Dual O-ring)
+.002/-.000	**+.000/-.003**	**+.005/-.000**	**+.000/-.002**			
3.125	2.613	0.326	3.123	150	230	**0401CQ25603125-326A**
3.250	2.738	0.326	3.248	151	231	**0401CQ25603250-326A**
3.375	2.863	0.326	3.373	151	232	**0401CQ25603375-326A**
3.500	2.988	0.326	3.498	152	233	**0401CQ25603500-326A**
3.625	3.113	0.326	3.623	152	234	**0401CQ25603625-326A**
3.750	3.238	0.326	3.748	153	235	**0401CQ25603750-326A**
3.875	3.363	0.326	3.873	153	236	**0401CQ25603875-326A**
4.000	3.488	0.326	3.998	154	237	**0401CQ25604000-326A**
4.125	3.613	0.326	4.123	154	238	**0401CQ25604125-326A**
4.250	3.738	0.326	4.248	155	239	**0401CQ25604250-326A**
4.375	3.863	0.326	4.373	155	240	**0401CQ25604375-326A**
4.500	3.988	0.326	4.498	156	241	**0401CQ25604500-326A**
4.625	4.113	0.326	4.623	156	242	**0401CQ25604625-326A**
4.750	4.238	0.326	4.748	157	243	**0401CQ25604750-326A**
4.875	4.363	0.326	4.873	157	244	**0401CQ25604875-326A**
+.004/-.000	**+.000/-.006**	**+.005/-.000**	**+.000/-.004**			
5.000	4.292	0.484	4.998	248	346	**0401CQ35405000-484A**
5.125	4.417	0.484	5.123	249	347	**0401CQ35405125-484A**
5.250	4.542	0.484	5.248	250	348	**0401CQ35405250-484A**
5.375	4.667	0.484	5.373	251	349	**0401CQ35405375-484A**
5.500	4.792	0.484	5.498	252	350	**0401CQ35405500-484A**
5.625	4.917	0.484	5.623	253	351	**0401CQ35405625-484A**
5.750	5.042	0.484	5.748	254	352	**0401CQ35405750-484A**
5.875	5.167	0.484	5.873	255	353	**0401CQ35405875-484A**
6.000	5.292	0.484	5.998	256	354	**0401CQ35406000-484A**
6.250	5.542	0.484	6.248	258	356	**0401CQ35406250-484A**
6.500	5.792	0.484	6.498	259	358	**0401CQ35406500-484A**
6.750	6.042	0.484	6.748	260	360	**0401CQ35406750-484A**
7.000	6.292	0.484	6.998	261	361	**0401CQ35407000-484A**
7.250	6.542	0.484	7.248	262	362	**0401CQ35407250-484A**
7.500	6.792	0.484	7.498	263	363	**0401CQ35407500-484A**
7.750	7.042	0.484	7.748	264	364	**0401CQ35407750-484A**
8.000	7.292	0.484	7.998	265	365	**0401CQ35408000-484A**
8.250	7.542	0.484	8.248	266	366	**0401CQ35408250-484A**
8.500	7.792	0.484	8.498	267	367	**0401CQ35408500-484A**
8.750	8.042	0.484	8.748	268	368	**0401CQ35408750-484A**
9.000	8.292	0.484	8.998	269	369	**0401CQ35409000-484A**
9.250	8.542	0.484	9.248	270	370	**0401CQ35409250-484A**
9.500	8.792	0.484	9.498	271	371	**0401CQ35409500-484A**
9.750	9.042	0.484	9.748	272	372	**0401CQ35409750-484A**
10.000	9.292	0.484	9.998	273	373	**0401CQ35410000-484A**
10.500	9.792	0.484	10.498	274	375	**0401CQ35410500-484A**
11.000	10.292	0.484	10.998	275	377	**0401CQ35411000-484A**
11.500	10.792	0.484	11.498	276	378	**0401CQ35411500-484A**
+.006/-.000	**+.000/-.008**	**+.005/-.000**	**+.000/-.006**			
12.000	10.780	0.642	11.998	380	450	**0401CQ61012000-642A**
12.500	11.280	0.642	12.498	381	451	**0401CQ61012500-642A**
13.000	11.780	0.642	12.998	381	452	**0401CQ61013000-642A**
13.500	12.280	0.642	13.498	382	453	**0401CQ61013500-642A**
14.000	12.780	0.642	13.998	382	454	**0401CQ61014000-642A**

*If used with wear rings, refer to wear ring piston diameter, see Section 9.

Parker Hannifin Corporation
Engineered Polymer Systems Division
Phone: 801 972 3000

Table 7-44. CQ Gland Dimensions (Dual O-ring) — Inch (Continued)

A Bore Diameter	B Groove Diameter	C Groove Width	D Piston Diameter*	Quad Seal Dash Number	Dual O-ring Number	CQ Part Number (Dual O-ring)
14.500	13.280	0.642	14.498	383	455	**0401CQ61014500-642A**
15.000	13.780	0.642	14.998	383	456	**0401CQ61015000-642A**
15.500	14.280	0.642	15.498	384	457	**0401CQ61015500-642A**
16.000	14.780	0.642	15.998	384	458	**0401CQ61016000-642A**
16.500	15.280	0.642	16.498	385	459	**0401CQ61016500-642A**
17.000	15.780	0.642	16.998	385	460	**0401CQ61017000-642A**
17.500	16.280	0.642	17.498	386	461	**0401CQ61017500-642A**
18.000	16.780	0.642	17.998	386	462	**0401CQ61018000-642A**
18.500	17.280	0.642	18.498	387	463	**0401CQ61018500-642A**
19.000	17.780	0.642	18.998	387	464	**0401CQ61019000-642A**
19.500	18.280	0.642	19.498	388	465	**0401CQ61019500-642A**
20.000	18.780	0.642	19.998	388	466	**0401CQ61020000-642A**

*If used with wear rings, refer to wear ring piston diameter, see Section 9.

NOTE: For sizes larger than those shown in the table, please contact your local Parker Seal representative.

Part Number Nomenclature — CQ Profile

Table 7-45. CQ Profile — Metric (mm)

M 4 0 1 CQ 0 6 . 5 1 2 0 - 8 . 3 A

Profile

Gland Depth (mm)
Example: 06.5 = 6.5mm

Groove Width (mm)
Example: 8.3 = 8.3mm
(Include decimal as needed)

Seal Compound
4-Digit Material Code
(First digit "0" replaced with "M" for Metric)
Example:
M401 = 15% Fiberglass-filled PTFE

Bore Diameter (mm)
(3 digits; use leading zeros if needed)
Example:
012 = 12mm
120 = 120mm

Energizer Material Code
A = 70A Nitrile
Omit = No energizer/ quad seal

Option:
N = Notched walls

Parker Hannifin Corporation
Engineered Polymer Systems Division
Phone: 801 972 3000

OE Profile, PTFE Piston Cap Seal

The Parker OE profile is a bi-directional piston seal for use in low to medium duty hydraulic applications. The OE profile is a two piece design comprised of a standard size Parker o-ring energizing a wear resistant PTFE cap. The OE profile offers long wear, low friction and because of its short assembly length requires minimal gland space on the piston. The seal is commonly used in applications such as mobile hydraulics, machine tools, injection molding machines and hydraulic presses. Parker's OE profile will retrofit non-Parker seals of similar design.

The OE profile may be ordered without the energizer by omitting the energizer code. See part number nomenclature.

Technical Data

Standard Materials*		Temperature Range	Pressure Range†	Surface Speed
Cap				
0401	40% bronze filled PTFE	-200°F to 575°F (-129°C to 302°C)	5000 psi (344 bar)	< 13 ft/s (4 m/sec)
Energizer				
A	70A Nitrile	-30°F to 250°F (-34°C to 121°C)		

OE Cross-Section

***Alternate Materials:** For applications that may require an alternate material, please see Section 3 for alternate PTFE (Table 3-4) and energizer (Table 3-5) materials.

†**Pressure Range** without wear rings (see Table 2-4, page 2-5).

Options

Notched side walls: Adding an "N" to the end of the part number indicates that notches are to be added to the side walls of the PTFE cap. Notches can help optimize the seal's response to fluid pressure. In application, the void created by the notch allows fluid pressure to fill the cavity between the side face of the gland and the seal. Consult your local Parker Seal representative for the availability and cost to add side notches to the OE profile.

N = Notched walls 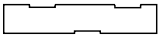

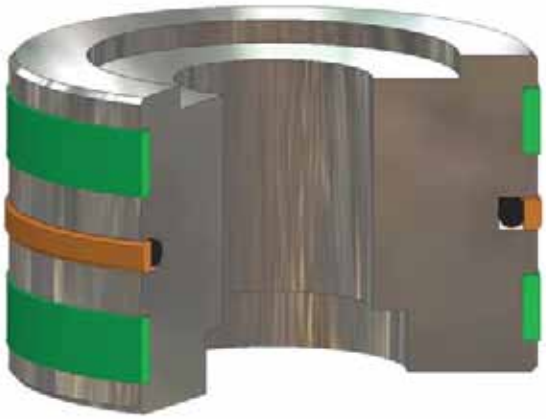

OE installed in Piston Gland

Parker Hannifin Corporation
Engineered Polymer Systems Division
Phone: 801 972 3000

Part Number Nomenclature — OE Profile

Table 7-46. OE Profile — Inch

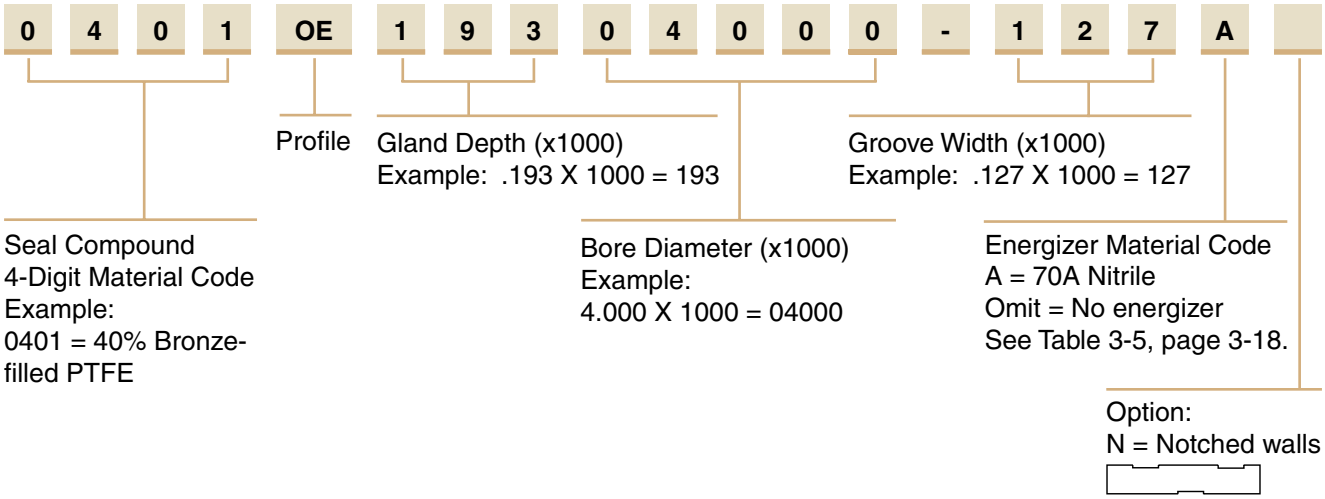

Gland Dimension — OE Profile

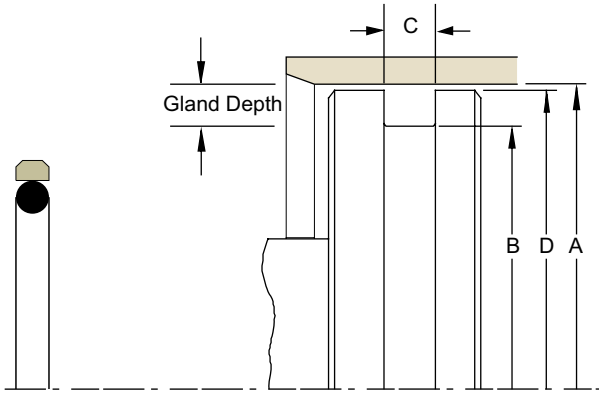

Please refer to Engineering Section 2, Page 2-8 for surface finish and additional hardware considerations.

Table 7-47. OE Gland Dimensions — Inch

A Bore Diameter	B Groove Diameter	C Groove Width	D Piston Diameter*	O-ring Dash Number	Part Number
+.001/-.000	+.000/-.001	+.005/-.000	.000/-.002		
0.500	0.326	0.081	0.499	011	**0401OE08700500-081A**
0.562	0.388	0.081	0.561	012	**0401OE08700562-081A**
0.625	0.451	0.081	0.624	013	**0401OE08700625-081A**
0.687	0.513	0.081	0.686	014	**0401OE08700687-081A**
0.750	0.576	0.081	0.749	015	**0401OE08700750-081A**
0.812	0.638	0.081	0.811	016	**0401OE08700812-081A**
0.875	0.701	0.081	0.874	017	**0401OE08700875-081A**
0.937	0.763	0.081	0.936	018	**0401OE08700937-081A**
1.000	0.826	0.081	0.999	019	**0401OE08701000-081A**
1.062	0.888	0.081	1.061	020	**0401OE08701062-081A**
1.125	0.951	0.081	1.124	021	**0401OE08701125-081A**
1.187	1.013	0.081	1.186	022	**0401OE08701187-081A**
1.250	1.076	0.081	1.249	023	**0401OE08701250-081A**
1.312	1.138	0.081	1.311	024	**0401OE08701312-081A**
1.375	1.201	0.081	1.374	025	**0401OE08701375-081A**
1.437	1.263	0.081	1.436	026	**0401OE08701437-081A**
1.500	1.326	0.081	1.499	027	**0401OE08701500-081A**

*If used with wear rings, refer to wear ring piston diameter, see Section 9.

09/01/07

Parker Hannifin Corporation
Engineered Polymer Systems Division
Phone: 801 972 3000

Table 7-47. OE Gland Dimensions — Inch (Continued)

A Bore Diameter	B Groove Diameter	C Groove Width	D Piston Diameter*	O-ring Dash Number	Part Number
+.002/-.000	+.000/-.002	+.005/-.000	+.000/-.002		
0.500	0.244	0.081	0.499	010	**0401OE12800500-081A**
0.562	0.306	0.081	0.561	011	**0401OE12800562-081A**
0.625	0.369	0.081	0.624	012	**0401OE12800625-081A**
0.687	0.431	0.081	0.686	013	**0401OE12800687-081A**
0.750	0.494	0.081	0.749	014	**0401OE12800750-081A**
0.812	0.556	0.081	0.811	015	**0401OE12800812-081A**
0.875	0.619	0.081	0.874	016	**0401OE12800875-081A**
0.937	0.681	0.081	0.936	017	**0401OE12800937-081A**
1.000	0.744	0.081	0.999	018	**0401OE12801000-081A**
1.062	0.806	0.081	1.061	019	**0401OE12801062-081A**
1.125	0.869	0.081	1.124	020	**0401OE12801125-081A**
1.187	0.931	0.081	1.186	021	**0401OE12801187-081A**
1.250	0.994	0.081	1.249	022	**0401OE12801250-081A**
1.312	1.056	0.081	1.311	023	**0401OE12801312-081A**
1.375	1.119	0.081	1.374	024	**0401OE12801375-081A**
1.437	1.181	0.081	1.436	025	**0401OE12801437-081A**
1.500	1.244	0.081	1.499	026	**0401OE12801500-081A**
+.002/-.000	+.000/-.003	+.005/-.000	+.000/-.002		
0.750	0.452	0.126	0.749	111	**0401OE14900750-126A**
0.812	0.514	0.126	0.811	112	**0401OE14900812-126A**
0.875	0.577	0.126	0.874	113	**0401OE14900875-126A**
0.937	0.639	0.126	0.936	114	**0401OE14900937-126A**
1.000	0.702	0.126	0.999	115	**0401OE14901000-126A**
1.062	0.764	0.126	1.061	116	**0401OE14901062-126A**
1.125	0.827	0.126	1.124	117	**0401OE14901125-126A**
1.187	0.889	0.126	1.186	118	**0401OE14901187-126A**
1.250	0.952	0.126	1.249	119	**0401OE14901250-126A**
1.312	1.014	0.126	1.311	120	**0401OE14901312-126A**
1.375	1.077	0.126	1.374	121	**0401OE14901375-126A**
1.437	1.139	0.126	1.436	122	**0401OE14901437-126A**
1.500	1.202	0.126	1.499	123	**0401OE14901500-126A**
1.562	1.264	0.126	1.561	124	**0401OE14901562-126A**
1.625	1.327	0.126	1.624	125	**0401OE14901625-126A**
1.687	1.389	0.126	1.686	126	**0401OE14901687-126A**
1.750	1.452	0.126	1.749	127	**0401OE14901750-126A**
1.875	1.577	0.126	1.874	129	**0401OE14901875-126A**
2.000	1.702	0.126	1.999	131	**0401OE14902000-126A**
2.125	1.827	0.126	2.124	133	**0401OE14902125-126A**
2.250	1.952	0.126	2.249	135	**0401OE14902250-126A**
2.375	2.077	0.126	2.374	137	**0401OE14902375-126A**
2.500	2.202	0.126	2.499	139	**0401OE14902500-126A**
2.625	2.327	0.126	2.624	141	**0401OE14902625-126A**
2.750	2.452	0.126	2.749	143	**0401OE14902750-126A**
1.562	1.176	0.120	1.561	123	**0401OE19301562-120A**
1.625	1.239	0.120	1.624	124	**0401OE19301625-120A**
1.687	1.301	0.120	1.686	125	**0401OE19301687-120A**
1.750	1.364	0.120	1.749	126	**0401OE19301750-120A**
1.875	1.489	0.120	1.874	128	**0401OE19301875-120A**
2.000	1.614	0.127	1.999	130	**0401OE19302000-127A**
2.125	1.739	0.127	2.124	132	**0401OE19302125-127A**
2.250	1.864	0.127	2.249	134	**0401OE19302250-127A**

*If used with wear rings, refer to wear ring piston diameter, see Section 9.

09/01/07

Parker Hannifin Corporation
Engineered Polymer Systems Division
Phone: 801 972 3000

Table 7-47. OE Gland Dimensions — Inch (Continued)

A Bore Diameter	B Groove Diameter	C Groove Width	D Piston Diameter*	O-ring Dash Number	Part Number
+.002/-.000	+.000/-.003	+.005/-.000	+.000/-.002		
2.375	1.989	0.127	2.374	136	**0401OE19302375-127A**
2.500	2.114	0.127	2.499	138	**0401OE19302500-127A**
2.625	2.239	0.127	2.624	140	**0401OE19302625-127A**
2.750	2.364	0.127	2.749	142	**0401OE19302750-127A**
2.875	2.489	0.127	2.874	144	**0401OE19302875-127A**
3.000	2.614	0.127	2.999	146	**0401OE19303000-127A**
3.125	2.739	0.127	3.124	148	**0401OE19303125-127A**
3.250	2.864	0.127	3.249	150	**0401OE19303250-127A**
3.375	2.989	0.127	3.374	151	**0401OE19303375-127A**
3.500	3.114	0.127	3.499	151	**0401OE19303500-127A**
3.625	3.239	0.127	3.624	152	**0401OE19303625-127A**
3.750	3.364	0.127	3.749	152	**0401OE19303750-127A**
3.875	3.489	0.127	3.874	153	**0401OE19303875-127A**
4.000	3.614	0.127	3.999	153	**0401OE19304000-127A**
4.125	3.739	0.127	4.124	154	**0401OE19304125-127A**
4.250	3.864	0.127	4.249	154	**0401OE19304250-127A**
4.375	3.989	0.127	4.374	155	**0401OE19304375-127A**
4.500	4.114	0.127	4.499	155	**0401OE19304500-127A**
4.625	4.239	0.127	4.624	156	**0401OE19304625-127A**
4.750	4.364	0.127	4.749	156	**0401OE19304750-127A**
4.875	4.489	0.127	4.874	157	**0401OE19304875-127A**
5.000	4.614	0.127	4.999	157	**0401OE19305000-127A**
5.125	4.739	0.127	5.124	158	**0401OE19305125-127A**
5.250	4.864	0.127	5.249	158	**0401OE19305250-127A**
5.375	4.989	0.127	5.374	159	**0401OE19305375-127A**
5.500	5.114	0.127	5.499	159	**0401OE19305500-127A**
+.003/-.000	+.000/-.004	+.005/-.000	+.000/-.003		
1.562	1.138	0.166	1.561	217	**0401OE21201562-166A**
1.625	1.201	0.166	1.624	218	**0401OE21201625-166A**
1.687	1.263	0.166	1.686	219	**0401OE21201687-166A**
1.750	1.326	0.166	1.749	221	**0401OE21201750-166A**
1.875	1.451	0.166	1.874	222	**0401OE21201875-166A**
2.000	1.576	0.166	1.999	223	**0401OE21202000-166A**
2.125	1.701	0.166	2.124	224	**0401OE21202125-166A**
2.250	1.826	0.166	2.249	225	**0401OE21202250-166A**
2.375	1.951	0.166	2.374	226	**0401OE21202375-166A**
2.500	2.076	0.166	2.499	227	**0401OE21202500-166A**
2.625	2.201	0.166	2.624	228	**0401OE21202625-166A**
2.750	2.326	0.166	2.749	229	**0401OE21202750-166A**
2.875	2.451	0.166	2.874	230	**0401OE21202875-166A**
3.000	2.576	0.166	2.999	231	**0401OE21203000-166A**
3.125	2.701	0.166	3.124	232	**0401OE21203125-166A**
3.250	2.826	0.166	3.249	233	**0401OE21203250-166A**
3.375	2.951	0.166	3.374	234	**0401OE21203375-166A**
3.500	3.076	0.166	3.499	235	**0401OE21203500-166A**
3.625	3.201	0.166	3.624	236	**0401OE21203625-166A**
3.750	3.326	0.166	3.749	237	**0401OE21203750-166A**
3.875	3.451	0.166	3.874	238	**0401OE21203875-166A**
4.000	3.576	0.166	3.999	239	**0401OE21204000-166A**

*If used with wear rings, refer to wear ring piston diameter, see Section 9.

Parker Hannifin Corporation
Engineered Polymer Systems Division
Phone: 801 972 3000

Table 7-47. OE Gland Dimensions — Inch (Continued)

A Bore Diameter	B Groove Diameter	C Groove Width	D Piston Diameter*	O-ring Dash Number	Part Number
+.003/-.000	+.000/-.004	+.005/-.000	+.000/-.003		
4.125	3.701	0.166	4.124	240	**0401OE21204125-166A**
4.250	3.826	0.166	4.249	241	**0401OE21204250-166A**
4.375	3.951	0.166	4.374	242	**0401OE21204375-166A**
4.500	4.076	0.166	4.499	243	**0401OE21204500-166A**
4.625	4.201	0.166	4.624	244	**0401OE21204625-166A**
4.750	4.326	0.166	4.749	245	**0401OE21204750-166A**
4.875	4.451	0.166	4.874	246	**0401OE21204875-166A**
5.000	4.576	0.166	4.999	247	**0401OE21205000-166A**
5.125	4.701	0.166	5.124	248	**0401OE21205125-166A**
5.250	4.826	0.166	5.249	249	**0401OE21205250-166A**
5.375	4.951	0.166	5.374	250	**0401OE21205375-166A**
5.500	5.076	0.166	5.499	251	**0401OE21205500-166A**
+.003/-.000	+.000/-.005	+.005/-.000	+.000/-.003		
5.625	5.109	0.157	5.623	251	**0401OE25805625-157A**
5.750	5.234	0.157	5.748	252	**0401OE25805750-157A**
5.875	5.359	0.157	5.873	253	**0401OE25805875-157A**
6.000	5.484	0.157	5.998	254	**0401OE25806000-157A**
6.125	5.609	0.157	6.123	255	**0401OE25806125-157A**
6.250	5.734	0.157	6.248	256	**0401OE25806250-157A**
6.375	5.859	0.157	6.373	257	**0401OE25806375-157A**
6.500	5.984	0.157	6.498	258	**0401OE25806500-157A**
6.750	6.234	0.157	6.748	259	**0401OE25806750-157A**
7.000	6.484	0.157	6.998	260	**0401OE25807000-157A**
7.250	6.734	0.157	7.248	261	**0401OE25807250-157A**
7.500	6.984	0.157	7.498	262	**0401OE25807500-157A**
7.750	7.234	0.157	7.748	263	**0401OE25807750-157A**
8.000	7.484	0.157	7.998	264	**0401OE25808000-157A**
8.250	7.734	0.157	8.248	265	**0401OE25808250-157A**
8.500	7.984	0.157	8.498	266	**0401OE25808500-157A**
9.000	8.484	0.157	8.998	268	**0401OE25809000-157A**
9.500	8.984	0.157	9.498	270	**0401OE25809500-157A**
10.000	9.484	0.157	9.998	272	**0401OE25810000-157A**
10.500	9.984	0.157	10.498	274	**0401OE25810500-157A**
11.000	10.484	0.157	10.998	275	**0401OE25811000-157A**
11.500	10.984	0.157	11.498	276	**0401OE25811500-157A**
12.000	11.484	0.157	11.998	277	**0401OE25812000-157A**
+.003/-.000	+.000/-.006	+.005/-.000	+.000/-.003		
3.125	2.509	0.247	3.123	333	**0401OE30803125-247A**
3.250	2.634	0.247	3.248	334	**0401OE30803250-247A**
3.375	2.759	0.247	3.373	335	**0401OE30803375-247A**
3.500	2.884	0.247	3.498	336	**0401OE30803500-247A**
3.625	3.009	0.247	3.623	337	**0401OE30803625-247A**
3.750	3.134	0.247	3.748	338	**0401OE30803750-247A**
3.875	3.259	0.247	3.873	339	**0401OE30803875-247A**
4.000	3.384	0.247	3.998	340	**0401OE30804000-247A**
4.125	3.509	0.247	4.123	341	**0401OE30804125-247A**
4.250	3.634	0.247	4.248	342	**0401OE30804250-247A**
4.375	3.759	0.247	4.373	343	**0401OE30804375-247A**
4.500	3.884	0.247	4.498	344	**0401OE30804500-247A**

*If used with wear rings, refer to wear ring piston diameter, see Section 9.

Parker Hannifin Corporation
Engineered Polymer Systems Division
Phone: 801 972 3000

Table 7-47. OE Gland Dimensions — Inch (Continued)

A Bore Diameter	B Groove Diameter	C Groove Width	D Piston Diameter*	O-ring Dash Number	Part Number
+.003/-.000	+.000/-.006	+.005/-.000	+.000/-.003		
4.625	4.009	0.247	4.623	345	**0401OE30804625-247A**
4.750	4.134	0.247	4.748	346	**0401OE30804750-247A**
4.875	4.259	0.247	4.873	347	**0401OE30804875-247A**
5.000	4.384	0.247	4.998	348	**0401OE30805000-247A**
5.125	4.509	0.247	5.123	349	**0401OE30805125-247A**
5.250	4.634	0.247	5.248	350	**0401OE30805250-247A**
5.375	4.759	0.247	5.373	351	**0401OE30805375-247A**
5.500	4.884	0.247	5.498	352	**0401OE30805500-247A**
5.625	5.009	0.247	5.623	353	**0401OE30805625-247A**
5.750	5.134	0.247	5.748	354	**0401OE30805750-247A**
5.875	5.259	0.247	5.873	355	**0401OE30805875-247A**
6.000	5.384	0.247	5.998	356	**0401OE30806000-247A**
6.125	5.509	0.247	6.123	357	**0401OE30806125-247A**
6.250	5.634	0.247	6.248	358	**0401OE30806250-247A**
6.375	5.759	0.247	6.373	359	**0401OE30806375-247A**
6.500	5.884	0.247	6.498	360	**0401OE30806500-247A**
6.750	6.134	0.247	6.748	361	**0401OE30806750-247A**
7.000	6.384	0.247	6.998	362	**0401OE30807000-247A**
7.250	6.634	0.247	7.248	363	**0401OE30807250-247A**
7.500	6.884	0.247	7.498	364	**0401OE30807500-247A**
7.750	7.134	0.247	7.748	365	**0401OE30807750-247A**
8.000	7.384	0.247	7.998	366	**0401OE30808000-247A**
8.250	7.634	0.247	8.248	367	**0401OE30808250-247A**
8.500	7.884	0.247	8.498	368	**0401OE30808500-247A**
9.000	8.384	0.247	8.998	370	**0401OE30809000-247A**
9.500	8.884	0.247	9.498	372	**0401OE30809500-247A**
10.000	9.384	0.247	9.998	374	**0401OE30810000-247A**
10.500	9.884	0.247	10.498	376	**0401OE30810500-247A**
11.000	10.384	0.247	10.998	377	**0401OE30811000-247A**
11.500	10.884	0.247	11.498	378	**0401OE30811500-247A**
12.000	11.384	0.247	11.998	379	**0401OE30812000-247A**
+.004/-.000	+.000/-.007	+.005/-.000	+.000/-.004		
5.375	4.545	0.320	5.373	425	**0401OE41505375-320A**
5.500	4.670	0.320	5.498	426	**0401OE41505500-320A**
5.625	4.795	0.320	5.623	427	**0401OE41505625-320A**
5.750	4.920	0.320	5.748	428	**0401OE41505750-320A**
5.875	5.045	0.320	5.873	429	**0401OE41505875-320A**
6.000	5.170	0.320	5.998	430	**0401OE41506000-320A**
6.125	5.295	0.320	6.123	431	**0401OE41506125-320A**
6.250	5.420	0.320	6.248	432	**0401OE41506250-320A**
6.375	5.545	0.320	6.373	433	**0401OE41506375-320A**
6.500	5.670	0.320	6.498	435	**0401OE41506500-320A**
6.750	5.920	0.320	6.748	436	**0401OE41506750-320A**
7.000	6.170	0.320	6.998	437	**0401OE41507000-320A**
7.250	6.420	0.320	7.248	438	**0401OE41507250-320A**
7.500	6.670	0.320	7.498	439	**0401OE41507500-320A**
7.750	6.920	0.320	7.748	440	**0401OE41507750-320A**
8.000	7.170	0.320	7.998	441	**0401OE41508000-320A**
8.250	7.420	0.320	8.248	442	**0401OE41508250-320A**

*If used with wear rings, refer to wear ring piston diameter, see Section 9.

Parker Hannifin Corporation
Engineered Polymer Systems Division
Phone: 801 972 3000

Table 7-47. OE Gland Dimensions — Inch (Continued)

A Bore Diameter	B Groove Diameter	C Groove Width	D Piston Diameter*	O-ring Dash Number	Part Number
8.500	7.670	0.320	8.498	443	**0401OE41508500-320A**
9.000	8.170	0.320	8.998	445	**0401OE41509000-320A**
9.500	8.670	0.320	9.498	446	**0401OE41509500-320A**
10.000	9.170	0.320	9.998	447	**0401OE41510000-320A**
10.500	9.670	0.320	10.498	448	**0401OE41510500-320A**
11.000	10.170	0.320	10.998	449	**0401OE41511000-320A**
11.500	10.670	0.320	11.498	450	**0401OE41511500-320A**
12.000	11.170	0.320	11.998	451	**0401OE41512000-320A**
12.500	11.670	0.320	12.498	452	**0401OE41512500-320A**
13.000	12.170	0.320	12.998	453	**0401OE41513000-320A**
13.500	12.670	0.320	13.498	454	**0401OE41513500-320A**
14.000	13.170	0.320	13.998	455	**0401OE41514000-320A**
14.500	13.670	0.320	14.498	456	**0401OE41514500-320A**
15.000	14.170	0.320	14.998	457	**0401OE41515000-320A**
15.500	14.670	0.320	15.498	458	**0401OE41515500-320A**
16.000	15.170	0.320	15.998	459	**0401OE41516000-320A**

*If used with wear rings, refer to wear ring piston diameter, see Section 9.

NOTE: For sizes larger than those shown in the table, please contact your local Parker Seal representative.

Part Number Nomenclature — OE Profile

Table 7-48. OE Profile — Metric (mm)

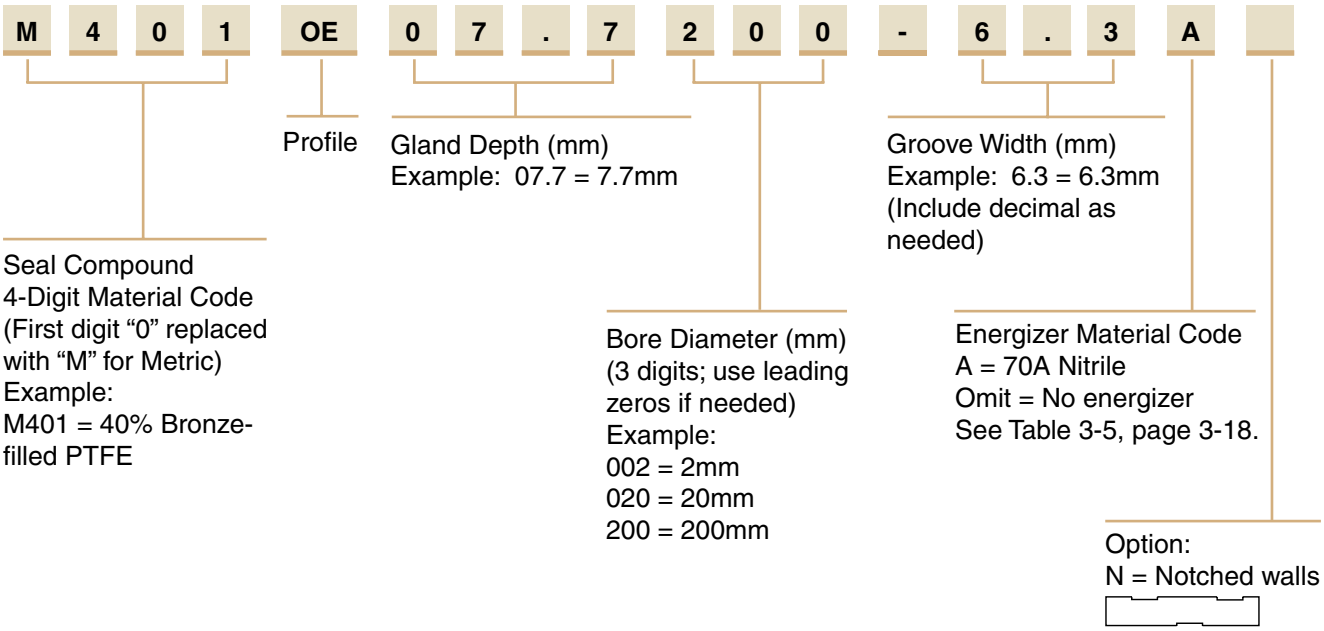

7

09/01/07

Parker Hannifin Corporation
Engineered Polymer Systems Division
Phone: 801 972 3000
www.parkerseals.com

Gland Dimension — OE Profile

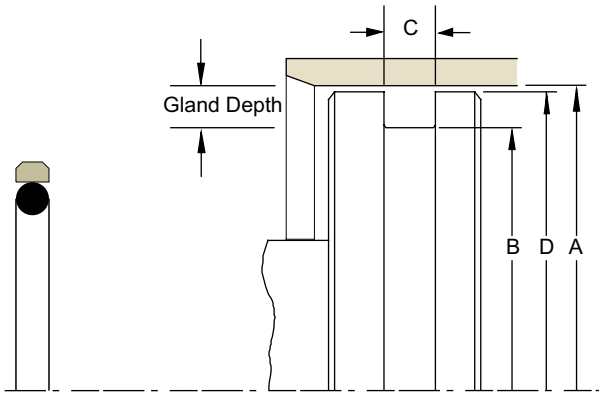

Please refer to Engineering Section 2, Page 2-8 for surface finish and additional hardware considerations.

Table 7-49. OE Gland Dimensions — Metric (mm)

A Bore Diameter	B Groove Diameter	C Groove Width	D Piston Diameter*	O-ring Dash Number	Part Number
H9	h9	+.02/-.00	h8		
8.00	3.00	2.20	7.97	005	**M401OE02.5008-2.2A**
10.00	5.00	2.20	9.97	010	**M401OE02.5010-2.2A**
11.00	6.00	2.20	10.97	010	**M401OE02.5011-2.2A**
12.00	7.00	2.20	11.97	010	**M401OE02.5012-2.2A**
13.00	8.00	2.20	12.97	011	**M401OE02.5013-2.2A**
14.00	9.00	2.20	13.97	011	**M401OE02.5014-2.2A**
16.00	8.50	3.20	15.94	109	**M401OE03.7016-3.2A**
18.00	10.50	3.20	17.94	110	**M401OE03.7018-3.2A**
20.00	12.50	3.20	19.94	112	**M401OE03.7020-3.2A**
22.00	14.50	3.20	21.94	113	**M401OE03.7022-3.2A**
24.00	16.50	3.20	23.94	114	**M401OE03.7024-3.2A**
25.00	17.50	3.20	24.94	115	**M401OE03.7025-3.2A**
28.00	20.50	3.20	27.94	117	**M401OE03.7028-3.2A**
30.00	22.50	3.20	29.94	118	**M401OE03.7030-3.2A**
32.00	24.50	3.20	31.94	119	**M401OE03.7032-3.2A**
35.00	27.50	3.20	34.94	121	**M401OE03.7035-3.2A**
36.00	28.50	3.20	35.94	122	**M401OE03.7036-3.2A**
38.00	30.50	3.20	37.94	123	**M401OE03.7038-3.2A**
40.00	32.50	3.20	39.94	124	**M401OE03.7040-3.2A**
25.00	14.00	4.20	24.94	207	**M401OE05.5025-4.2A**
32.00	21.00	4.20	31.94	211	**M401OE05.5032-4.2A**
40.00	29.00	4.20	39.94	216	**M401OE05.5040-4.2A**
45.00	34.00	4.20	44.94	219	**M401OE05.5045-4.2A**
50.00	39.00	4.20	49.94	222	**M401OE05.5050-4.2A**
55.00	44.00	4.20	54.94	224	**M401OE05.5055-4.2A**
60.00	49.00	4.20	59.94	225	**M401OE05.5060-4.2A**
63.00	52.00	4.20	62.94	226	**M401OE05.5063-4.2A**
65.00	54.00	4.20	64.94	227	**M401OE05.5065-4.2A**
70.00	59.00	4.20	69.94	228	**M401OE05.5070-4.2A**
75.00	64.00	4.20	74.94	230	**M401OE05.5075-4.2A**
80.00	69.00	4.20	79.94	231	**M401OE05.5080-4.2A**
100.00	89.00	4.20	99.94	238	**M401OE05.5100-4.2A**
50.00	34.50	6.30	49.90	324	**M401OE07.7050-6.3A**
63.00	47.50	6.30	62.90	328	**M401OE07.7063-6.3A**
70.00	54.50	6.30	69.90	330	**M401OE07.7070-6.3A**
80.00	64.50	6.30	79.90	333	**M401OE07.7080-6.3A**
85.00	69.50	6.30	84.90	335	**M401OE07.7085-6.3A**
90.00	74.50	6.30	89.90	336	**M401OE07.7090-6.3A**
95.00	79.50	6.30	94.90	338	**M401OE07.7095-6.3A**
100.00	84.50	6.30	99.90	339	**M401OE07.7100-6.3A**

*If used with wear rings, refer to wear ring piston diameter, see Section 9.

Parker Hannifin Corporation
Engineered Polymer Systems Division
Phone: 801 972 3000

Table 7-49. OE Gland Dimensions — Metric (Continued)

A Bore Diameter	B Groove Diameter	C Groove Width	D Piston Diameter*	O-ring Dash Number	Part Number
H9	h9	+.02/-.00	h8		
105.00	89.50	6.30	104.90	341	**M401OE07.7105-6.3A**
110.00	94.50	6.30	109.90	342	**M401OE07.7110-6.3A**
115.00	99.50	6.30	114.90	344	**M401OE07.7115-6.3A**
120.00	104.50	6.30	119.90	345	**M401OE07.7120-6.3A**
125.00	109.50	6.30	124.90	347	**M401OE07.7125-6.3A**
130.00	114.50	6.30	129.90	349	**M401OE07.7130-6.3A**
132.00	116.50	6.30	131.90	349	**M401OE07.7132-6.3A**
135.00	119.50	6.30	134.90	350	**M401OE07.7135-6.3A**
140.00	124.50	6.30	139.90	352	**M401OE07.7140-6.3A**
145.00	129.50	6.30	144.90	353	**M401OE07.7145-6.3A**
160.00	144.50	6.30	159.90	358	**M401OE07.7160-6.3A**
200.00	184.50	6.30	199.90	366	**M401OE07.7200-6.3A**
135.00	114.00	8.10	134.90	425	**M401OE10.5135-8.1A**
140.00	119.00	8.10	139.90	426	**M401OE10.5140-8.1A**
145.00	124.00	8.10	144.90	428	**M401OE10.5145-8.1A**
150.00	129.00	8.10	149.90	430	**M401OE10.5150-8.1A**
155.00	134.00	8.10	154.90	431	**M401OE10.5155-8.1A**
160.00	139.00	8.10	159.90	433	**M401OE10.5160-8.1A**
165.00	144.00	8.10	164.90	434	**M401OE10.5165-8.1A**
170.00	149.00	8.10	169.90	435	**M401OE10.5170-8.1A**
175.00	154.00	8.10	174.90	437	**M401OE10.5175-8.1A**
180.00	159.00	8.10	179.90	438	**M401OE10.5180-8.1A**
185.00	164.00	8.10	184.90	438	**M401OE10.5185-8.1A**
190.00	169.00	8.10	189.90	439	**M401OE10.5190-8.1A**
195.00	174.00	8.10	194.90	440	**M401OE10.5195-8.1A**
200.00	179.00	8.10	199.90	441	**M401OE10.5200-8.1A**
205.00	184.00	8.10	204.90	442	**M401OE10.5205-8.1A**
210.00	189.00	8.10	209.90	443	**M401OE10.5210-8.1A**
215.00	194.00	8.10	214.90	443	**M401OE10.5215-8.1A**
220.00	199.00	8.10	219.90	444	**M401OE10.5220-8.1A**
225.00	204.00	8.10	224.90	445	**M401OE10.5225-8.1A**
230.00	209.00	8.10	229.90	445	**M401OE10.5230-8.1A**
235.00	214.00	8.10	234.90	445	**M401OE10.5235-8.1A**
240.00	219.00	8.10	239.90	446	**M401OE10.5240-8.1A**
245.00	224.00	8.10	244.90	446	**M401OE10.5245-8.1A**
250.00	229.00	8.10	249.90	447	**M401OE10.5250-8.1A**

*If used with wear rings, refer to wear ring piston diameter, see Section 9.

NOTE: For sizes larger than those shown in the table, please contact your local Parker Seal representative.

Parker Hannifin Corporation
Engineered Polymer Systems Division
Phone: 801 972 3000

CP Profile, PTFE Piston Cap Seal

The Parker CP profile is a cap seal with anti-extrusion, low friction and low wear features. The CP profile is a bi-directional piston seal for use in low to medium duty applications. The CP profile retrofits into a standard size o-ring groove without modification. There are three CP profiles to match the groove width for a single o-ring, o-ring with one back-up, or an o-ring with two back-up rings. Because of the unique design of the filled PTFE cap, the CP profile offers long wear, low friction and anti-extrusion. Because of its short assembly length, only minimal gland space is needed to fit the seal on the piston. Parker's CP profile will retrofit non-Parker seals of similar design.

- CP0 — a standard o-ring groove.
- CP1 — an o-ring groove designed for one back-up ring.
- CP2 — an o-ring groove designed for two back-up rings.

The CP profile may be ordered without the energizer by omitting the energizer code. See part number nomenclature.

Technical Data

Standard Materials*		Temperature Range	Pressure Range†	Surface Speed
Cap				
0401	40% bronze filled PTFE	-200°F to 575°F (-129°C to 302°C)	3,500 psi (240 bar)	< 13 ft/s (4 m/sec)
Energizer				
A	70A Nitrile	-30°F to 250°F (-34°C to 121°C)		

CP Cross-Section

***Alternate Materials:** For applications that may require an alternate material, please see Section 3 for alternate PTFE (Table 3-4) and energizer (Table 3-5) materials.

†**Pressure Range** without wear rings (see Table 2-4, page 2-5).

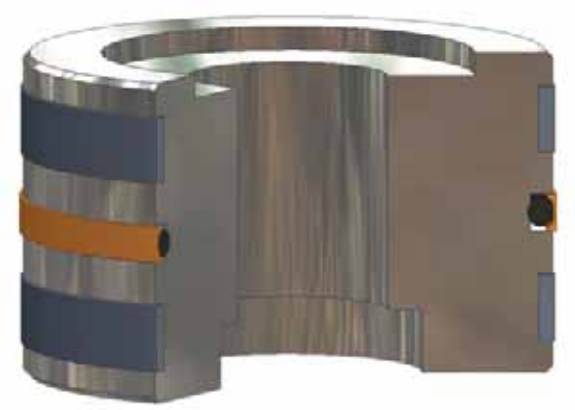

CP installed in Piston Gland

Options

Notched side walls: Adding an "N" to the end of the part number indicates that notches are to be added to the side walls of the PTFE cap. Notches can help optimize the seal's response to fluid pressure. In application, the void created by the notch allows fluid pressure to fill the cavity between the side face of the gland and the seal. Consult your local Parker Seal representative for the availability and cost to add side notches to the CP profile.

N = Notched walls 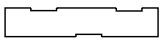

Parker Hannifin Corporation
Engineered Polymer Systems Division
Phone: 801 972 3000

Part Number Nomenclature — CP Profile

Table 7-50. CP Profile — Inch

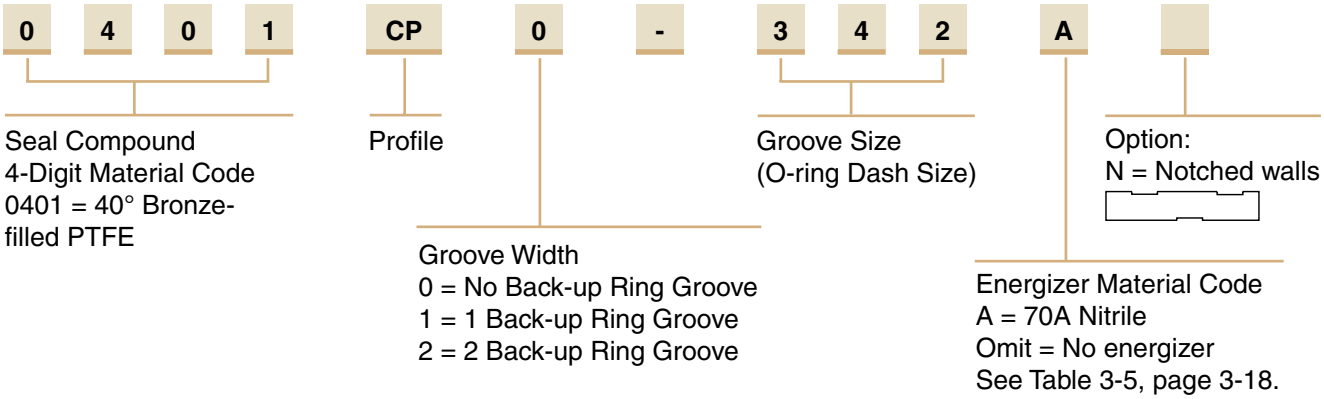

Gland Dimension — CP Profile

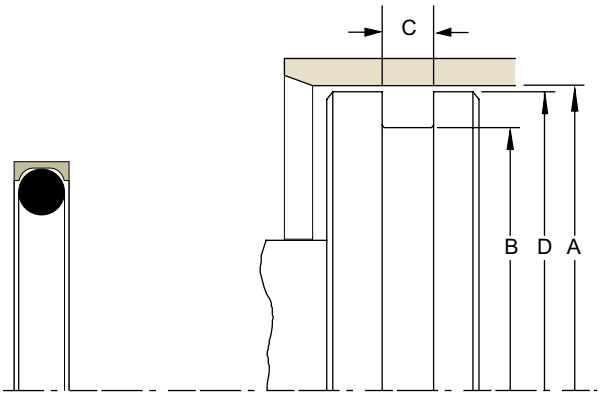

Please refer to Engineering Section 2, Page 2-8 for surface finish and additional hardware considerations.

Table 7-51. CP Gland Dimensions — Inch

A Bore Diameter	B Groove Diameter	C Groove Width (CP0)	C Groove Width (CP1)	C Groove Width (CP2)	D Piston Diameter* 5000 psi (345 bar)	O-ring Dash Number	CP Part Number (X = Groove Width of 0, 1 or 2)
+.002/-.000	+.000/-.002	+.005/-.000	+.005/-.000	+.005/-.000	+.000/-.001		
0.250	0.140	0.093	0.138	0.205	0.249	006	**0401CPX-006A**
0.281	0.171	0.093	0.138	0.205	0.280	007	**0401CPX-007A**
0.312	0.202	0.093	0.138	0.205	0.311	008	**0401CPX-008A**
0.344	0.234	0.093	0.138	0.205	0.343	009	**0401CPX-009A**
0.375	0.265	0.093	0.138	0.205	0.374	010	**0401CPX-010A**
0.437	0.327	0.093	0.138	0.205	0.436	011	**0401CPX-011A**
0.500	0.390	0.093	0.138	0.205	0.499	012	**0401CPX-012A**
0.562	0.452	0.093	0.138	0.205	0.560	013	**0401CPX-013A**
0.625	0.515	0.093	0.138	0.205	0.623	014	**0401CPX-014A**
0.687	0.577	0.093	0.138	0.205	0.685	015	**0401CPX-015A**
0.750	0.640	0.093	0.138	0.205	0.748	016	**0401CPX-016A**
0.812	0.702	0.093	0.138	0.205	0.810	017	**0401CPX-017A**
0.875	0.765	0.093	0.138	0.205	0.873	018	**0401CPX-018A**
0.937	0.827	0.093	0.138	0.205	0.935	019	**0401CPX-019A**
1.000	0.890	0.093	0.138	0.205	0.998	020	**0401CPX-020A**
1.062	0.952	0.093	0.138	0.205	1.060	021	**0401CPX-021A**
1.125	1.015	0.093	0.138	0.205	1.123	022	**0401CPX-022A**
1.187	1.077	0.093	0.138	0.205	1.185	023	**0401CPX-023A**
1.250	1.140	0.093	0.138	0.205	1.248	024	**0401CPX-024A**

*If used with wear rings, refer to wear ring piston diameter, see Section 9.

09/01/07

Parker Hannifin Corporation
Engineered Polymer Systems Division
Phone: 801 972 3000

Table 7-51. CP Gland Dimensions — Inch (Continued)

A Bore Diameter	B Groove Diameter	C Groove Width (CP0)	C Groove Width (CP1)	C Groove Width (CP2)	D Piston Diameter* 5000 psi (345 bar)	O-ring Dash Number	CP Part Number (X = Groove Width of 0, 1 or 2)
+.002/-.000	+.000/-.002	+.005/-.000	+.005/-.000	+.005/-.000	+.00/-.001		
1.312	1.202	0.093	0.138	0.205	1.310	025	**0401CPX-025A**
1.375	1.265	0.093	0.138	0.205	1.373	026	**0401CPX-026A**
1.437	1.327	0.093	0.138	0.205	1.435	027	**0401CPX-027A**
1.500	1.390	0.093	0.138	0.205	1.498	028	**0401CPX-028A**
+.002/-.000	+.000/-.002	+.005/-.000	+.005/-.000	+.005/-.000	+.000/-.002		
0.312	0.136	0.140	0.171	0.238	0.311	104	**0401CPX-104A**
0.343	0.167	0.140	0.171	0.238	0.342	105	**0401CPX-105A**
0.375	0.199	0.140	0.171	0.238	0.374	106	**0401CPX-106A**
0.406	0.230	0.140	0.171	0.238	0.405	107	**0401CPX-107A**
0.437	0.261	0.140	0.171	0.238	0.436	108	**0401CPX-108A**
0.500	0.324	0.140	0.171	0.238	0.499	109	**0401CPX-109A**
0.562	0.386	0.140	0.171	0.238	0.561	110	**0401CPX-110A**
0.625	0.449	0.140	0.171	0.238	0.624	111	**0401CPX-111A**
0.687	0.511	0.140	0.171	0.238	0.686	112	**0401CPX-112A**
0.750	0.574	0.140	0.171	0.238	0.749	113	**0401CPX-113A**
0.812	0.636	0.140	0.171	0.238	0.811	114	**0401CPX-114A**
0.875	0.699	0.140	0.171	0.238	0.874	115	**0401CPX-115A**
0.937	0.761	0.140	0.171	0.238	0.936	116	**0401CPX-116A**
1.000	0.824	0.140	0.171	0.238	0.999	117	**0401CPX-117A**
1.062	0.886	0.140	0.171	0.238	1.061	118	**0401CPX-118A**
1.125	0.949	0.140	0.171	0.238	1.124	119	**0401CPX-119A**
1.187	1.011	0.140	0.171	0.238	1.186	120	**0401CPX-120A**
1.250	1.074	0.140	0.171	0.238	1.249	121	**0401CPX-121A**
1.312	1.136	0.140	0.171	0.238	1.311	122	**0401CPX-122A**
1.375	1.199	0.140	0.171	0.238	1.374	123	**0401CPX-123A**
1.437	1.261	0.140	0.171	0.238	1.436	124	**0401CPX-124A**
1.500	1.324	0.140	0.171	0.238	1.499	125	**0401CPX-125A**
1.562	1.386	0.140	0.171	0.238	1.561	126	**0401CPX-126A**
1.625	1.449	0.140	0.171	0.238	1.624	127	**0401CPX-127A**
1.687	1.511	0.140	0.171	0.238	1.686	128	**0401CPX-128A**
1.750	1.574	0.140	0.171	0.238	1.749	129	**0401CPX-129A**
1.812	1.636	0.140	0.171	0.238	1.810	130	**0401CPX-130A**
1.875	1.699	0.140	0.171	0.238	1.873	131	**0401CPX-131A**
1.937	1.761	0.140	0.171	0.238	1.935	132	**0401CPX-132A**
2.000	1.824	0.140	0.171	0.238	1.998	133	**0401CPX-133A**
2.062	1.886	0.140	0.171	0.238	2.060	134	**0401CPX-134A**
2.125	1.949	0.140	0.171	0.238	2.123	135	**0401CPX-135A**
2.187	2.011	0.140	0.171	0.238	2.185	136	**0401CPX-136A**
2.250	2.074	0.140	0.171	0.238	2.248	137	**0401CPX-137A**
2.312	2.136	0.140	0.171	0.238	2.310	138	**0401CPX-138A**
2.375	2.199	0.140	0.171	0.238	2.373	139	**0401CPX-139A**
2.437	2.261	0.140	0.171	0.238	2.435	140	**0401CPX-140A**
+.002/-.000	+.000/-.002	+.005/-.000	+.005/-.000	.005/-.000	+.000/-.003		
2.500	2.324	0.140	0.171	0.238	2.498	141	**0401CPX-141A**
2.562	2.386	0.140	0.171	0.238	2.560	142	**0401CPX-142A**
2.625	2.449	0.140	0.171	0.238	2.623	143	**0401CPX-143A**
2.687	2.511	0.140	0.171	0.238	2.685	144	**0401CPX-144A**
2.750	2.574	0.140	0.171	0.238	2.748	145	**0401CPX-145A**
2.812	2.636	0.140	0.171	0.238	2.810	146	**0401CPX-146A**

*If used with wear rings, refer to wear ring piston diameter, see Section 9.

Parker Hannifin Corporation
Engineered Polymer Systems Division
Phone: 801 972 3000

Table 7-51. CP Gland Dimensions — Inch (Continued)

A Bore Diameter	B Groove Diameter	C Groove Width (CP0)	C Groove Width (CP1)	C Groove Width (CP2)	D Piston Diameter* 5000 psi (345 bar)	O-ring Dash Number	CP Part Number (X = Groove Width of 0, 1 or 2)
+.002/-.000	+.000/-.002	+.005/-.000	+.005/-.000	.005/-.000	+.000/-.003		
2.875	2.699	0.140	0.171	0.238	2.873	147	**0401CPX-147A**
2.937	2.761	0.140	0.171	0.238	2.935	148	**0401CPX-148A**
3.000	2.824	0.140	0.171	0.238	2.998	149	**0401CPX-149A**
+.002/-.000	+.000/-.002	+.005/-.000	+.005/-.000	+.005/-.000	+.000/-.002		
0.437	0.195	0.187	0.208	0.275	0.436	201	**0401CPX-201A**
0.500	0.258	0.187	0.208	0.275	0.499	202	**0401CPX-202A**
0.562	0.320	0.187	0.208	0.275	0.561	203	**0401CPX-203A**
0.625	0.383	0.187	0.208	0.275	0.624	204	**0401CPX-204A**
0.687	0.445	0.187	0.208	0.275	0.686	205	**0401CPX-205A**
0.750	0.508	0.187	0.208	0.275	0.749	206	**0401CPX-206A**
0.812	0.570	0.187	0.208	0.275	0.811	207	**0401CPX-207A**
0.875	0.633	0.187	0.208	0.275	0.874	208	**0401CPX-208A**
0.937	0.695	0.187	0.208	0.275	0.936	209	**0401CPX-209A**
1.000	0.758	0.187	0.208	0.275	0.999	210	**0401CPX-210A**
1.062	0.820	0.187	0.208	0.275	1.061	211	**0401CPX-211A**
1.125	0.883	0.187	0.208	0.275	1.124	212	**0401CPX-212A**
1.187	0.945	0.187	0.208	0.275	1.186	213	**0401CPX-213A**
1.250	1.008	0.187	0.208	0.275	1.249	214	**0401CPX-214A**
1.312	1.070	0.187	0.208	0.275	1.311	215	**0401CPX-215A**
1.375	1.133	0.187	0.208	0.275	1.374	216	**0401CPX-216A**
1.437	1.195	0.187	0.208	0.275	1.436	217	**0401CPX-217A**
1.500	1.258	0.187	0.208	0.275	1.499	218	**0401CPX-218A**
1.562	1.320	0.187	0.208	0.275	1.561	219	**0401CPX-219A**
1.625	1.383	0.187	0.208	0.275	1.624	220	**0401CPX-220A**
1.687	1.445	0.187	0.208	0.275	1.686	221	**0401CPX-221A**
1.750	1.508	0.187	0.208	0.275	1.749	222	**0401CPX-222A**
1.875	1.633	0.187	0.208	0.275	1.873	223	**0401CPX-223A**
2.000	1.758	0.187	0.208	0.275	1.998	224	**0401CPX-224A**
2.125	1.883	0.187	0.208	0.275	2.123	225	**0401CPX-225A**
2.250	2.008	0.187	0.208	0.275	2.248	226	**0401CPX-226A**
2.375	2.133	0.187	0.208	0.275	2.373	227	**0401CPX-227A**
+.002/-.000	+.000/-.002	+.005/-.000	+.005/-.000	+.0005/-.000	+.000/-.003		
2.500	2.258	0.187	0.208	0.275	2.498	228	**0401CPX-228A**
2.625	2.383	0.187	0.208	0.275	2.623	229	**0401CPX-229A**
2.750	2.508	0.187	0.208	0.275	2.748	230	**0401CPX-230A**
2.875	2.633	0.187	0.208	0.275	2.873	231	**0401CPX-231A**
3.000	2.758	0.187	0.208	0.275	2.998	232	**0401CPX-232A**
3.125	2.883	0.187	0.208	0.275	3.123	233	**0401CPX-233A**
3.250	3.008	0.187	0.208	0.275	3.248	234	**0401CPX-234A**
3.375	3.133	0.187	0.208	0.275	3.373	235	**0401CPX-235A**
3.500	3.258	0.187	0.208	0.275	3.498	236	**0401CPX-236A**
3.625	3.383	0.187	0.208	0.275	3.623	237	**0401CPX-237A**
3.750	3.508	0.187	0.208	0.275	3.748	238	**0401CPX-238A**
3.875	3.633	0.187	0.208	0.275	3.873	239	**0401CPX-239A**
4.000	3.758	0.187	0.208	0.275	3.998	240	**0401CPX-240A**
4.125	3.883	0.187	0.208	0.275	4.123	241	**0401CPX-241A**
4.250	4.008	0.187	0.208	0.275	4.248	242	**0401CPX-242A**
4.375	4.133	0.187	0.208	0.275	4.373	243	**0401CPX-243A**
4.500	4.258	0.187	0.208	0.275	4.497	244	**0401CPX-244A**

*If used with wear rings, refer to wear ring piston diameter, see Section 9.

Parker Hannifin Corporation
Engineered Polymer Systems Division
Phone: 801 972 3000

Table 7-51. CP Gland Dimensions — Inch (Continued)

A Bore Diameter	B Groove Diameter	C Groove Width (CP0)	C Groove Width (CP1)	C Groove Width (CP2)	D Piston Diameter* 5000 psi (345 bar)	O-ring Dash Number	CP Part Number (X = Groove Width of 0, 1 or 2)
+.002/-.000	+.000/-.002	+.005/-.000	+.005/-.000	+.0005/-.000	+.000/-.003		
4.625	4.383	0.187	0.208	0.275	4.622	245	**0401CPX-245A**
4.750	4.508	0.187	0.208	0.275	4.747	246	**0401CPX-246A**
4.875	4.633	0.187	0.208	0.275	4.872	247	**0401CPX-247A**
5.000	4.758	0.187	0.208	0.275	4.997	248	**0401CPX-248A**
+.002/-.000	+.000/-.002	+.005/-.000	+.005/-.000	+.005/-.000	+.000/-.002		
0.812	0.442	0.281	0.311	0.410	0.810	309	**0401CPX-309A**
0.875	0.505	0.281	0.311	0.410	0.873	310	**0401CPX-310A**
0.937	0.567	0.281	0.311	0.410	0.935	311	**0401CPX-311A**
1.000	0.630	0.281	0.311	0.410	0.998	312	**0401CPX-312A**
1.062	0.692	0.281	0.311	0.410	1.060	313	**0401CPX-313A**
1.125	0.755	0.281	0.311	0.410	1.123	314	**0401CPX-314A**
1.187	0.817	0.281	0.311	0.410	1.185	315	**0401CPX-315A**
1.250	0.880	0.281	0.311	0.410	1.248	316	**0401CPX-316A**
1.312	0.942	0.281	0.311	0.410	1.310	317	**0401CPX-317A**
1.375	1.005	0.281	0.311	0.410	1.373	318	**0401CPX-318A**
1.437	1.067	0.281	0.311	0.410	1.435	319	**0401CPX-319A**
1.500	1.130	0.281	0.311	0.410	1.498	320	**0401CPX-320A**
1.562	1.192	0.281	0.311	0.410	1.560	321	**0401CPX-321A**
1.625	1.255	0.281	0.311	0.410	1.623	322	**0401CPX-322A**
1.687	1.317	0.281	0.311	0.410	1.685	323	**0401CPX-323A**
1.750	1.380	0.281	0.311	0.410	1.748	324	**0401CPX-324A**
1.875	1.505	0.281	0.311	0.410	1.873	325	**0401CPX-325A**
2.000	1.630	0.281	0.311	0.410	1.998	326	**0401CPX-326A**
2.125	1.755	0.281	0.311	0.410	2.123	327	**0401CPX-327A**
2.250	1.880	0.281	0.311	0.410	2.248	328	**0401CPX-328A**
2.375	2.005	0.281	0.311	0.410	2.373	329	**0401CPX-329A**
+.002/-.000	+.000/-.002	+.005/-.000	+.005/-.000	+.005/-.000	+.000/-.003		
2.500	2.130	0.281	0.311	0.410	2.498	330	**0401CPX-330A**
2.625	2.255	0.281	0.311	0.410	2.623	331	**0401CPX-331A**
2.750	2.380	0.281	0.311	0.410	2.748	332	**0401CPX-332A**
2.875	2.505	0.281	0.311	0.410	2.873	333	**0401CPX-333A**
3.000	2.630	0.281	0.311	0.410	2.998	334	**0401CPX-334A**
3.125	2.755	0.281	0.311	0.410	3.123	335	**0401CPX-335A**
3.250	2.880	0.281	0.311	0.410	3.248	336	**0401CPX-336A**
3.375	3.005	0.281	0.311	0.410	3.373	337	**0401CPX-337A**
3.500	3.130	0.281	0.311	0.410	3.498	338	**0401CPX-338A**
3.625	3.255	0.281	0.311	0.410	3.623	339	**0401CPX-339A**
3.750	3.380	0.281	0.311	0.410	3.748	340	**0401CPX-340A**
3.875	3.505	0.281	0.311	0.410	3.873	341	**0401CPX-341A**
4.000	3.630	0.281	0.311	0.410	3.998	342	**0401CPX-342A**
4.125	3.755	0.281	0.311	0.410	4.123	343	**0401CPX-343A**
4.250	3.880	0.281	0.311	0.410	4.247	344	**0401CPX-344A**
4.375	4.005	0.281	0.311	0.410	4.372	345	**0401CPX-345A**
+.002/-.000	+.000/-.002	+.005/-.000	+.005/-.000	+.005/-.000	+.000/-.003		
4.500	4.130	0.281	0.311	0.410	4.497	346	**0401CPX-346A**
4.625	4.255	0.281	0.311	0.410	4.622	347	**0401CPX-347A**
4.750	4.380	0.281	0.311	0.410	4.747	348	**0401CPX-348A**
4.875	4.505	0.281	0.311	0.410	4.872	349	**0401CPX-349A**
5.000	4.630	0.281	0.311	0.410	4.997	350	**0401CPX-350A**

*If used with wear rings, refer to wear ring piston diameter, see Section 9.

Parker Hannifin Corporation
Engineered Polymer Systems Division
Phone: 801 972 3000

Table 7-51. CP Gland Dimensions — Inch (Continued)

A Bore Diameter	B Groove Diameter	C Groove Width (CP0)	C Groove Width (CP1)	C Groove Width (CP2)	D Piston Diameter* 5000 psi (345 bar)	O-ring Dash Number	CP Part Number (X = Groove Width of 0, 1 or 2)
+.002/-.000	+.000/-.002	+.005/-.000	+.005/-.000	+.005/-.000	+.000/-.004		
5.000	4.526	0.375	0.408	0.538	4.997	425	**0401CPX-425A**
5.125	4.651	0.375	0.408	0.538	5.122	426	**0401CPX-426A**
5.250	4.776	0.375	0.408	0.538	5.247	427	**0401CPX-427A**
5.375	4.901	0.375	0.408	0.538	5.372	428	**0401CPX-428A**
5.500	5.026	0.375	0.408	0.538	5.497	429	**0401CPX-429A**
5.625	5.151	0.375	0.408	0.538	5.622	430	**0401CPX-430A**
5.750	5.276	0.375	0.408	0.538	5.747	431	**0401CPX-431A**
5.875	5.401	0.375	0.408	0.538	5.872	432	**0401CPX-432A**
6.000	5.526	0.375	0.408	0.538	5.997	433	**0401CPX-433A**
6.125	5.651	0.375	0.408	0.538	6.122	434	**0401CPX-434A**
6.250	5.776	0.375	0.408	0.538	6.247	435	**0401CPX-435A**
6.375	5.901	0.375	0.408	0.538	6.372	436	**0401CPX-436A**
6.500	6.026	0.375	0.408	0.538	6.497	437	**0401CPX-437A**
6.750	6.276	0.375	0.408	0.538	6.747	438	**0401CPX-438A**
7.000	6.526	0.375	0.408	0.538	6.997	439	**0401CPX-439A**
7.250	6.776	0.375	0.408	0.538	7.247	440	**0401CPX-440A**
7.500	7.026	0.375	0.408	0.538	7.497	441	**0401CPX-441A**
7.750	7.276	0.375	0.408	0.538	7.747	442	**0401CPX-442A**
8.000	7.526	0.375	0.408	0.538	7.997	443	**0401CPX-443A**
8.250	7.776	0.375	0.408	0.538	8.247	444	**0401CPX-444A**
8.500	8.026	0.375	0.408	0.538	8.497	445	**0401CPX-445A**
9.000	8.526	0.375	0.408	0.538	8.996	446	**0401CPX-446A**
9.500	9.026	0.375	0.408	0.538	9.496	447	**0401CPX-447A**
10.000	9.526	0.375	0.408	0.538	9.996	448	**0401CPX-448A**
10.500	10.026	0.375	0.408	0.538	10.496	449	**0401CPX-449A**
11.000	10.526	0.375	0.408	0.538	10.996	450	**0401CPX-450A**
11.500	11.026	0.375	0.408	0.538	11.496	451	**0401CPX-451A**
12.000	11.526	0.375	0.408	0.538	11.996	452	**0401CPX-452A**
12.500	12.026	0.375	0.408	0.538	12.496	453	**0401CPX-453A**
13.000	12.526	0.375	0.408	0.538	12.996	454	**0401CPX-454A**
13.500	13.026	0.375	0.408	0.538	13.496	455	**0401CPX-455A**
14.000	13.526	0.375	0.408	0.538	13.996	456	**0401CPX-456A**
14.500	14.026	0.375	0.408	0.538	14.496	457	**0401CPX-457A**
15.000	14.526	0.375	0.408	0.538	14.996	458	**0401CPX-458A**
15.500	15.026	0.375	0.408	0.538	15.496	459	**0401CPX-459A**
16.000	15.526	0.375	0.408	0.538	15.996	460	**0401CPX-460A**

*If used with wear rings, refer to wear ring piston diameter, see Section 9.

NOTE: For sizes larger than those shown in the table, please contact your local Parker Seal representative.

Parker Hannifin Corporation
Engineered Polymer Systems Division
Phone: 801 972 3000

OA Profile, Compact PTFE Piston Cap Seal

The Parker OA profile is a bi-directional piston seal for use in pneumatic and low to medium duty hydraulic applications. The OA profile is a two piece design utilizing a rectangular PTFE cap and standard size o-ring. The OA profile is an excellent choice for applications requiring a compact design. The unique properties of the modified PTFE provide added wear resistance for improved cycle life. Parker's OA profile will retrofit non-Parker seals of similar design.

The OA profile may be ordered without the energizer by omitting the energizer code. See part number nomenclature.

Technical Data

Standard Materials*		Temperature Range	Pressure Range†	Surface Speed
Cap				
0102	Modified PTFE	-320°F to 450°F (-195°C to 282°C)	1,500 psi (103 bar)	< 13 ft/s (4 m/sec)
Energizer				
A	70A Nitrile	-30°F to 250°F (-34°C to 121°C)		

***Alternate Materials:** For applications that may require an alternate material, please see Section 3 for alternate PTFE and energizer materials.

†**Pressure Range** without wear rings (see Table 2-4, page 2-5).

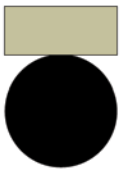

OA Cross-Section

Options

Notched side walls: Notches can be added to the side walls of the PTFE cap. This can help to optimize the seal's response to fluid pressure. Notched side walls help ensure that fluid pressure fills the cavity between the side face of the seal and the side face of the seal gland. Consult your local Parker Seal representative for the availability and cost to add side notches to the OA profile.

N = Notched walls

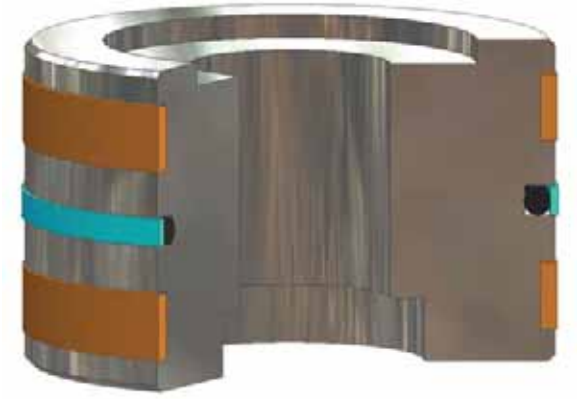

OA Installed in Piston Gland

Parker Hannifin Corporation
Engineered Polymer Systems Division
Phone: 801 972 3000

Part Number Nomenclature —OA Profile

Table 7-52. OA Profile — Inch

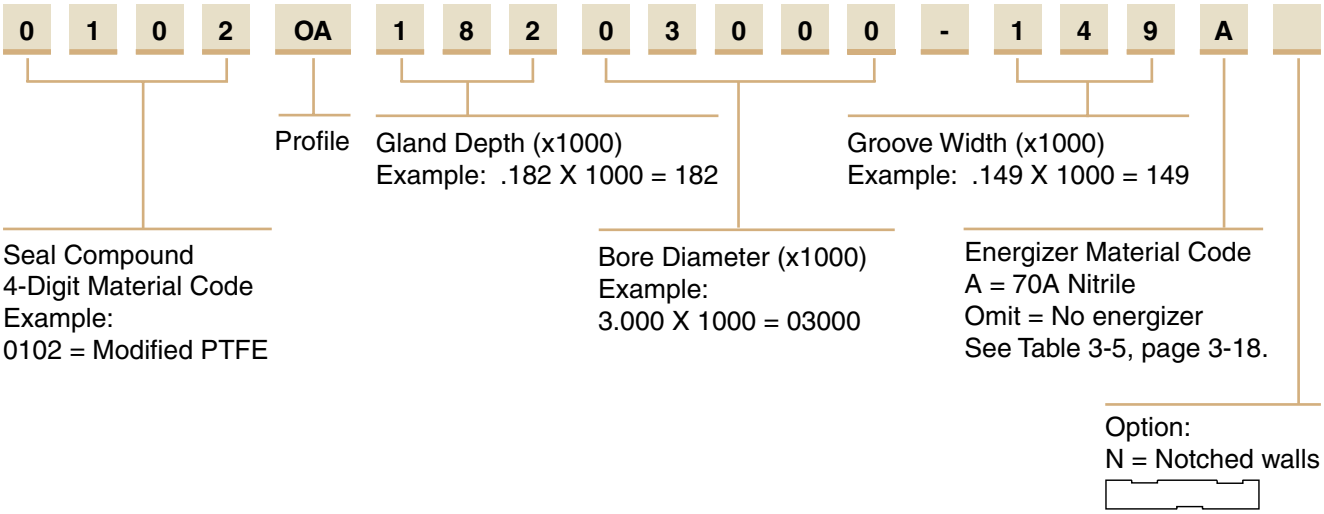

Gland Dimensions — OA Profile

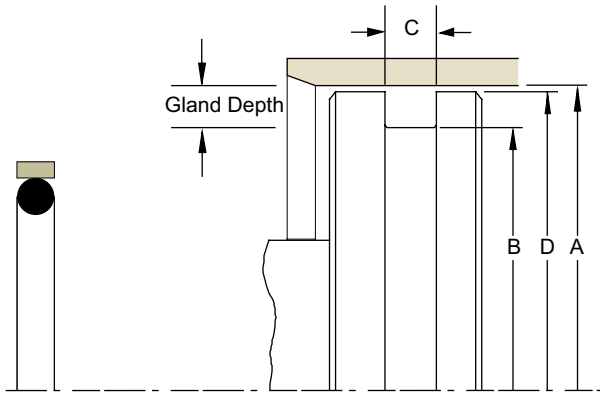

Please refer to Engineering Section 2, Page 2-8 for surface finish and additional hardware considerations.

Table 7-53. OA Profile — Inch

A Bore Diameter	B Groove Diameter	C Groove Width	D Piston Diameter*	Max Radius	O-ring Dash Number	Part Number
+.001/-.000	**+.000/-.001**	**+.005/-.000**	**+.000/-.001**			
0.281	0.139	0.079	0.277	0.020	006	**0102OA07200281-079A**
0.312	0.169	0.079	0.308	0.020	007	**0102OA07200312-079A**
0.344	0.200	0.079	0.340	0.020	008	**0102OA07200344-079A**
0.375	0.231	0.079	0.371	0.020	009	**0102OA07200375-079A**
0.437	0.263	0.079	0.433	0.020	010	**0102OA07200437-079A**
0.500	0.326	0.079	0.496	0.020	011	**0102OA08700500-079A**
+.002/-.000	**+.000/-.002**	**+.005/-.000**	**+.000/-.001**			
0.562	0.388	0.079	0.557	0.020	012	**0102OA08700562-079A**
0.625	0.452	0.079	0.620	0.020	013	**0102OA08700625-079A**
0.687	0.515	0.079	0.682	0.020	014	**0102OA08700687-079A**
0.750	0.577	0.079	0.745	0.020	015	**0102OA08700750-079A**
0.812	0.640	0.079	0.807	0.020	016	**0102OA08700812-079A**
0.875	0.702	0.079	0.870	0.020	017	**0102OA08700875-079A**
0.937	0.765	0.079	0.932	0.020	018	**0102OA08700937-079A**
1.000	0.827	0.079	0.995	0.020	019	**0102OA08701000-079A**

*If used with wear rings, refer to wear ring piston diameter, see Section 9.

09/01/07

Parker Hannifin Corporation
Engineered Polymer Systems Division
Phone: 801 972 3000

Table 7-53. OA Gland Dimensions — Inch (Continued)

A Bore Diameter	B Groove Diameter	C Groove Width	D Piston Diameter*	Max Radius	O-ring Dash Number	Part Number
+.002/-.000	+.000/-.002	+.005/-.000	+.000/-.001			
1.062	0.890	0.079	1.057	0.020	020	**0102OA08701062-079A**
1.125	0.952	0.079	1.120	0.020	021	**0102OA08701125-079A**
1.187	1.015	0.079	1.182	0.020	022	**0102OA08701187-079A**
1.250	1.078	0.079	1.245	0.020	023	**0102OA08701250-079A**
1.312	1.140	0.079	1.307	0.020	024	**0102OA08701312-079A**
1.375	1.202	0.079	1.370	0.020	025	**0102OA08701375-079A**
1.437	1.265	0.079	1.432	0.020	026	**0102OA08701437-079A**
1.500	1.327	0.079	1.495	0.020	027	**0102OA08701500-079A**
+.003/-.000	+.000/-.003	+.005/-.000	+.000/-.002			
0.625	0.388	0.112	0.620	0.020	110	**0102OA11800625-112A**
0.687	0.451	0.112	0.682	0.020	111	**0102OA11800687-112A**
0.750	0.513	0.112	0.745	0.020	112	**0102OA11800750-112A**
0.812	0.576	0.112	0.807	0.020	113	**0102OA11800812-112A**
0.875	0.638	0.112	0.870	0.020	114	**0102OA11800875-112A**
0.937	0.701	0.112	0.932	0.020	115	**0102OA11800937-112A**
1.000	0.763	0.112	0.995	0.020	116	**0102OA11801000-112A**
1.062	0.826	0.112	1.057	0.020	117	**0102OA11801062-112A**
1.125	0.888	0.112	1.120	0.020	118	**0102OA11801125-112A**
1.187	0.951	0.112	1.182	0.020	119	**0102OA11801187-112A**
1.250	1.013	0.112	1.245	0.020	120	**0102OA11801250-112A**
1.312	1.076	0.112	1.307	0.020	121	**0102OA11801312-112A**
1.375	1.138	0.112	1.370	0.020	122	**0102OA11801375-112A**
1.437	1.201	0.112	1.432	0.020	123	**0102OA11801437-112A**
1.500	1.263	0.112	1.495	0.020	124	**0102OA11801500-112A**
1.562	1.326	0.112	1.557	0.020	125	**0102OA11801562-112A**
1.625	1.388	0.112	1.620	0.020	126	**0102OA11801625-112A**
1.687	1.451	0.112	1.682	0.020	127	**0102OA11801687-112A**
1.750	1.513	0.112	1.745	0.020	128	**0102OA11801750-112A**
1.812	1.576	0.112	1.807	0.020	129	**0102OA11801812-112A**
1.875	1.638	0.112	1.870	0.020	130	**0102OA11801875-112A**
1.937	1.701	0.112	1.932	0.020	131	**0102OA11801937-112A**
2.000	1.763	0.112	1.995	0.020	132	**0102OA11802000-112A**
2.062	1.826	0.112	2.057	0.020	133	**0102OA11802062-112A**
2.125	1.888	0.112	2.120	0.020	134	**0102OA11802125-112A**
2.187	1.951	0.112	2.182	0.020	135	**0102OA11802187-112A**
2.250	2.013	0.112	2.245	0.020	136	**0102OA11802250-112A**
2.312	2.076	0.112	2.307	0.020	137	**0102OA11802312-112A**
2.375	2.138	0.112	2.370	0.020	138	**0102OA11802375-112A**
2.437	2.201	0.112	2.432	0.020	139	**0102OA11802437-112A**
2.500	2.263	0.112	2.495	0.020	140	**0102OA11802500-112A**
2.562	2.326	0.112	2.557	0.020	141	**0102OA11802562-112A**
2.625	2.388	0.112	2.620	0.020	142	**0102OA11802625-112A**
2.687	2.451	0.112	2.682	0.020	143	**0102OA11802687-112A**
2.750	2.513	0.112	2.745	0.020	144	**0102OA11802750-112A**
2.812	2.576	0.112	2.807	0.020	145	**0102OA11802812-112A**
2.875	2.638	0.112	2.870	0.020	146	**0102OA11802875-112A**
2.937	2.701	0.112	2.932	0.020	147	**0102OA11802937-112A**
3.000	2.763	0.112	2.995	0.020	148	**0102OA11803000-112A**

*If used with wear rings, refer to wear ring piston diameter, see Section 9.

Parker Hannifin Corporation
Engineered Polymer Systems Division
Phone: 801 972 3000

Table 7-53. OA Gland Dimensions — Inch (Continued)

A Bore Diameter	B Groove Diameter	C Groove Width	D Piston Diameter*	Max Radius	O-ring Dash Number	Part Number
+.004/-.000	+.000/-.004	+.005/-.000	+.000/-.002			
1.062	0.762	0.149	1.056	0.030	210	**0102OA15001062-149A**
1.125	0.824	0.149	1.119	0.030	211	**0102OA15001125-149A**
1.187	0.887	0.149	1.181	0.030	212	**0102OA15001187-149A**
1.250	0.950	0.149	1.244	0.030	213	**0102OA15001250-149A**
1.312	1.012	0.149	1.306	0.030	214	**0102OA15001312-149A**
1.375	1.074	0.149	1.369	0.030	215	**0102OA15001375-149A**
1.437	1.137	0.149	1.431	0.030	216	**0102OA15001437-149A**
1.500	1.199	0.149	1.494	0.030	217	**0102OA15001500-149A**
1.562	1.262	0.149	1.556	0.030	218	**0102OA15001562-149A**
1.625	1.324	0.149	1.619	0.030	219	**0102OA15001625-149A**
1.687	1.387	0.149	1.681	0.030	220	**0102OA15001687-149A**
1.750	1.450	0.149	1.744	0.030	221	**0102OA15001750-149A**
1.875	1.512	0.149	1.869	0.030	222	**0102OA18201875-149A**
2.000	1.637	0.149	1.994	0.030	223	**0102OA18202000-149A**
2.125	1.762	0.149	2.119	0.030	224	**0102OA18202125-149A**
2.250	1.887	0.149	2.244	0.030	225	**0102OA18202250-149A**
2.375	2.012	0.149	2.369	0.030	226	**0102OA18202375-149A**
2.500	2.137	0.149	2.494	0.030	227	**0102OA18202500-149A**
2.625	2.262	0.149	2.619	0.030	228	**0102OA18202625-149A**
2.750	2.387	0.149	2.744	0.030	229	**0102OA18202750-149A**
2.875	2.512	0.149	2.869	0.030	230	**0102OA18202875-149A**
3.000	2.637	0.149	2.994	0.030	231	**0102OA18203000-149A**
3.125	2.762	0.149	3.119	0.030	232	**0102OA18203125-149A**
3.250	2.887	0.149	3.244	0.030	233	**0102OA18203250-149A**
3.375	3.012	0.149	3.369	0.030	234	**0102OA18203375-149A**
3.500	3.137	0.149	3.494	0.030	235	**0102OA18203500-149A**
3.625	3.262	0.149	3.619	0.030	236	**0102OA18203625-149A**
3.750	3.387	0.149	3.744	0.030	237	**0102OA18203750-149A**
3.875	3.512	0.149	3.869	0.030	238	**0102OA18203875-149A**
4.000	3.637	0.149	3.994	0.030	239	**0102OA18204000-149A**
4.125	3.762	0.149	4.119	0.030	240	**0102OA18204125-149A**
4.250	3.887	0.149	4.244	0.030	241	**0102OA18204250-149A**
4.375	4.012	0.149	4.369	0.030	242	**0102OA18204375-149A**
4.500	4.137	0.149	4.494	0.030	243	**0102OA18204500-149A**
4.625	4.262	0.149	4.619	0.030	244	**0102OA18204625-149A**
4.750	4.387	0.149	4.744	0.030	245	**0102OA18204750-149A**
4.875	4.512	0.149	4.869	0.030	246	**0102OA18204875-149A**
5.000	4.637	0.149	4.994	0.030	247	**0102OA18205000-149A**
+.005/-.000	+.000/-.005	+.005/-.000	+.000/-.002			
2.000	1.509	0.221	1.993	0.050	325	**0102OA24602000-221A**
2.125	1.634	0.221	2.118	0.050	326	**0102OA24602125-221A**
2.250	1.759	0.221	2.243	0.050	327	**0102OA24602250-221A**
2.375	1.884	0.221	2.368	0.050	328	**0102OA24602375-221A**
2.500	2.009	0.221	2.493	0.050	329	**0102OA24602500-221A**
2.625	2.134	0.221	2.618	0.050	330	**0102OA24602625-221A**
2.750	2.259	0.221	2.743	0.050	331	**0102OA24602750-221A**
2.875	2.384	0.221	2.868	0.050	332	**0102OA24602875-221A**
3.000	2.509	0.221	2.993	0.050	333	**0102OA24603000-221A**

*If used with wear rings, refer to wear ring piston diameter, see Section 9.

Parker Hannifin Corporation
Engineered Polymer Systems Division
Phone: 801 972 3000

Table 7-53. OA Gland Dimensions — Inch (Continued)

A Bore Diameter	B Groove Diameter	C Groove Width	D Piston Diameter*	Max Radius	O-ring Dash Number	Part Number
+.005/-.000	+.000/-.005	+.005/-.000	+.000/-.002			
3.125	2.634	0.221	3.118	0.050	334	**0102OA24603125-221A**
3.250	2.759	0.221	3.243	0.050	335	**0102OA24603250-221A**
3.375	2.884	0.221	3.368	0.050	336	**0102OA24603375-221A**
3.500	3.009	0.221	3.493	0.050	337	**0102OA24603500-221A**
3.625	3.134	0.221	3.618	0.050	338	**0102OA24603625-221A**
3.750	3.259	0.221	3.743	0.050	339	**0102OA24603750-221A**
3.875	3.384	0.221	3.868	0.050	340	**0102OA24603875-221A**
4.000	3.509	0.221	3.993	0.050	341	**0102OA24604000-221A**
4.125	3.634	0.221	4.118	0.050	342	**0102OA24604125-221A**
4.250	3.759	0.221	4.243	0.050	343	**0102OA24604250-221A**
4.375	3.884	0.221	4.368	0.050	344	**0102OA24604375-221A**
4.500	4.009	0.221	4.493	0.050	345	**0102OA24604500-221A**
4.625	4.134	0.221	4.618	0.050	346	**0102OA24604625-221A**
4.750	4.259	0.221	4.743	0.050	347	**0102OA24604750-221A**
4.875	4.384	0.221	4.868	0.050	348	**0102OA24604875-221A**
5.000	4.509	0.221	4.993	0.050	349	**0102OA24605000-221A**
+.006/-.000	+.000/-.006	+.005/-.000	+.000/-.002			
5.125	4.532	0.297	5.117	0.060	425	**0102OA29705125-297A**
5.250	4.657	0.297	5.242	0.060	426	**0102OA29705250-297A**
5.375	4.782	0.297	5.367	0.060	427	**0102OA29705375-297A**
5.500	4.907	0.297	5.492	0.060	428	**0102OA29705500-297A**
5.625	5.032	0.297	5.617	0.060	429	**0102OA29705625-297A**
5.750	5.157	0.297	5.742	0.060	430	**0102OA29705750-297A**
5.875	5.282	0.297	5.867	0.060	431	**0102OA29705875-297A**
6.000	5.407	0.297	5.992	0.060	432	**0102OA29706000-297A**
6.125	5.532	0.297	6.117	0.060	433	**0102OA29706125-297A**
6.250	5.657	0.297	6.242	0.060	434	**0102OA29706250-297A**
6.375	5.782	0.297	6.367	0.060	435	**0102OA29706375-297A**
6.500	5.907	0.297	6.492	0.060	436	**0102OA29706500-297A**
6.750	6.032	0.297	6.742	0.060	437	**0102OA35906750-297A**
7.000	6.282	0.297	6.992	0.060	438	**0102OA35907000-297A**
7.250	6.532	0.297	7.242	0.060	439	**0102OA35907250-297A**
7.500	6.782	0.297	7.492	0.060	440	**0102OA35907500-297A**
7.750	7.032	0.297	7.742	0.060	441	**0102OA35907750-297A**
8.000	7.282	0.297	7.992	0.060	442	**0102OA35908000-297A**
8.250	7.532	0.297	8.242	0.060	443	**0102OA35908250-297A**
8.500	7.782	0.297	8.492	0.060	444	**0102OA35908500-297A**
9.000	8.032	0.297	8.992	0.060	445	**0102OA48409000-297A**
9.500	8.532	0.297	9.492	0.060	446	**0102OA48409500-297A**
10.000	9.032	0.297	9.992	0.060	447	**0102OA48410000-297A**
+.003/-.000	+.000/-.003	+.005/-.000	+.000/-.002			
10.500	9.532	0.297	10.492	0.060	448	**0102OA48410500-297A**
11.000	10.032	0.297	10.992	0.060	449	**0102OA48411000-297A**
11.500	10.532	0.297	11.492	0.060	450	**0102OA48411500-297A**
12.000	11.032	0.297	11.992	0.060	451	**0102OA48412000-297A**
12.500	11.532	0.297	12.492	0.060	452	**0102OA48412500-297A**
13.000	12.032	0.297	12.992	0.060	453	**0102OA48413000-297A**
13.500	12.532	0.297	13.492	0.060	454	**0102OA48413500-297A**
14.000	13.032	0.297	13.992	0.060	455	**0102OA48414000-297A**

*If used with wear rings, refer to wear ring piston diameter, see Section 9.

Parker Hannifin Corporation
Engineered Polymer Systems Division
Phone: 801 972 3000

Table 7-53. OA Gland Dimensions — Inch (Continued)

A Bore Diameter	B Groove Diameter	C Groove Width	D Piston Diameter*	Max Radius	O-ring Dash Number	Part Number
+.003/-.000	**+.000/-.003**	**+.005/-.000**	**+.000/-.002**			
14.500	13.532	0.297	14.492	0.060	456	**0102OA48414500-297A**
15.000	14.032	0.297	14.992	0.060	457	**0102OA48415000-297A**
15.500	14.532	0.297	15.492	0.060	458	**0102OA48415500-297A**
16.000	15.032	0.297	15.992	0.060	459	**0102OA48416000-297A**

*If used with wear rings, refer to wear ring piston diameter, see Section 9.

NOTE: For sizes larger than those shown in the table, please contact your local Parker Seal representative.

Parker Hannifin Corporation
Engineered Polymer Systems Division
Phone: 801 972 3000

OQ Profile, Rotary PTFE Cap Seal

The Parker OQ profile is a bi-directional piston seal for use in low to medium duty rotary or oscillating applications. The OQ profile is a two piece design comprised of a standard size o-ring energizing a wear resistant PTFE cap. The OQ profile offers long wear and low friction, without stickslip. The PTFE inner diameter is designed with a special interference with the o-ring to eliminate spinning between the o-ring and seal. Special grooves are designed into the PTFE outer diameter to provide lubrication and create a labyrinth effect for reduced leakage. Parker's OQ profile will retrofit non-Parker seals of similar design.

The OQ profile may be ordered without the energizer by omitting the energizer code. See part number nomenclature.

Technical Data

Standard Materials*		Temperature Range	Pressure Range†	Surface Speed
Cap				
0205	15% fiberglass-, 5% molybdenum disulfide-filled PTFE	-200°F to 575°F (-129°C to 302°C)	3000 psi (206 bar)	< 3.3 ft/s (1.0 m/sec)
Energizer				
A	70A Nitrile	-30°F to 250°F (-34°C to 121°C)		

***Alternate Materials:** For applications that may require an alternate material, please see Section 3 for alternate PTFE (Table 3-4) and energizer (Table 3-5) materials.

†Pressure Range without wear rings (see Table 2-4, page 2-5).

Options

Metric: For metric part numbering and availability, see Tables 7-56 and 7-57 on pages 7-77 through 7-79.

OQ Cross-Section

OQ installed in Rotary Gland

Parker Hannifin Corporation
Engineered Polymer Systems Division
Phone: 801 972 3000

Part Number Nomenclature — OQ Profile

Table 7-54. OQ Profile — Inch

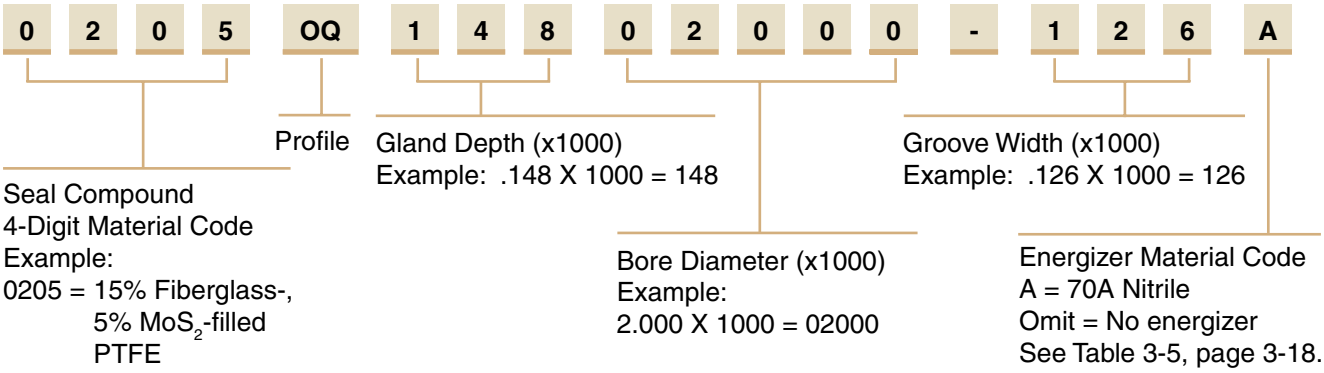

Gland Dimensions — OQ Profile

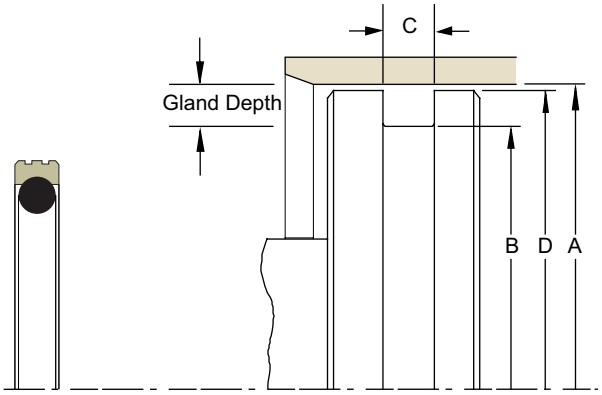

Please refer to Engineering Section 2, Page 2-8 for surface finish and additional hardware considerations.

Table 7-55. OQ Profile — Inch

A Bore Diameter	B Groove Diameter	C Groove Width	D Piston Diameter*	O-ring Dash Number	Part Number
+.001/-.000	**+.000/-.001**	**+.008/-.000**	**+.000/-.002**		
0.375	0.182	0.087	0.374	008	**0205OQ09700375-087A**
+.002/-.000	**+.000/-.002**	**+.008/-.000**	**+.000/-.002**		
0.438	0.245	0.087	0.437	010	**0205OQ09700438-087A**
0.500	0.307	0.087	0.499	011	**0205OQ09700500-087A**
0.563	0.370	0.087	0.562	012	**0205OQ09700563-087A**
0.625	0.432	0.087	0.624	013	**0205OQ09700625-087A**
0.688	0.495	0.087	0.687	014	**0205OQ09700688-087A**
0.750	0.557	0.087	0.749	015	**0205OQ09700750-087A**
0.813	0.620	0.087	0.812	016	**0205OQ09700813-087A**
0.875	0.682	0.087	0.874	017	**0205OQ09700875-087A**
0.938	0.745	0.087	0.937	018	**0205OQ09700938-087A**
1.000	0.807	0.087	0.999	019	**0205OQ09701000-087A**
1.125	0.932	0.087	1.124	021	**0205OQ09701125-087A**
1.250	1.057	0.087	1.249	023	**0205OQ09701250-087A**
1.375	1.182	0.087	1.374	025	**0205OQ09701375-087A**
+.002/-.000	**+.000/-.002**	**+.008/-.000**	**+.000/-.002**		
1.500	1.205	0.126	1.499	123	**0205OQ14801500-126A**
1.625	1.330	0.126	1.624	125	**0205OQ14801625-126A**
1.750	1.455	0.126	1.749	127	**0205OQ14801750-126A**
1.875	1.580	0.126	1.874	129	**0205OQ14801875-126A**

*If used with wear rings, refer to wear ring piston diameter, see Section 9.

09/01/07

Parker Hannifin Corporation
Engineered Polymer Systems Division
Phone: 801 972 3000

Table 7-55. OQ Gland Dimensions — Inch (Continued)

A Bore Diameter	B Groove Diameter	C Groove Width	D Piston Diameter*	O-ring Dash Number	Part Number
+.003/-.000	**+.000/-.003**	**+.008/-.000**	**+.000/-.002**		
2.000	1.705	0.126	1.999	131	**0205OQ14802000-126A**
2.125	1.830	0.126	2.124	133	**0205OQ14802125-126A**
2.250	1.955	0.126	2.249	135	**0205OQ14802250-126A**
2.375	2.080	0.126	2.374	137	**0205OQ14802375-126A**
2.500	2.205	0.126	2.499	139	**0205OQ14802500-126A**
2.625	2.330	0.126	2.624	141	**0205OQ14802625-126A**
2.750	2.455	0.126	2.749	143	**0205OQ14802750-126A**
2.875	2.580	0.126	2.874	145	**0205OQ14802875-126A**
+.003/-.000	**+.000/-.003**	**+.008/-.000**	**+.000/-.003**		
3.000	2.567	0.165	2.999	230	**0205OQ21703000-165A**
3.125	2.692	0.165	3.124	231	**0205OQ21703125-165A**
3.250	2.817	0.165	3.249	232	**0205OQ21703250-165A**
3.375	2.942	0.165	3.374	233	**0205OQ21703375-165A**
3.500	3.067	0.165	3.499	234	**0205OQ21703500-165A**
3.625	3.192	0.165	3.624	235	**0205OQ21703625-165A**
3.750	3.317	0.165	3.749	236	**0205OQ21703750-165A**
3.875	3.442	0.165	3.874	237	**0205OQ21703875-165A**
4.000	3.567	0.165	3.999	238	**0205OQ21704000-165A**
4.125	3.692	0.165	4.124	239	**0205OQ21704125-165A**
4.250	3.817	0.165	4.249	240	**0205OQ21704250-165A**
4.375	3.942	0.165	4.374	241	**0205OQ21704375-165A**
4.500	4.067	0.165	4.499	242	**0205OQ21704500-165A**
4.625	4.192	0.165	4.624	243	**0205OQ21704625-165A**
+.004/-.000	**+.000/-.004**	**+.008/-.000**	**+.000/-.003**		
4.750	4.317	0.165	4.749	244	**0205OQ21704750-165A**
4.875	4.442	0.165	4.874	245	**0205OQ21704875-165A**
5.000	4.567	0.165	4.999	246	**0205OQ21705000-165A**
5.125	4.692	0.165	5.124	247	**0205OQ21705125-165A**
5.250	4.817	0.165	5.249	248	**0205OQ21705250-165A**
5.375	4.942	0.165	5.374	249	**0205OQ21705375-165A**
5.500	5.067	0.165	5.499	250	**0205OQ21705500-165A**
5.625	5.192	0.165	5.624	251	**0205OQ21705625-165A**
5.750	5.317	0.165	5.749	252	**0205OQ21705750-165A**
5.875	5.442	0.165	5.874	253	**0205OQ21705875-165A**
+.004/-.000	**+.000/-.004**	**+.008/-.000**	**+.000/-.004**		
6.000	5.390	0.248	5.999	355	**0205OQ30506000-248A**
6.250	5.640	0.248	6.249	357	**0205OQ30506250-248A**
6.500	5.890	0.248	6.499	359	**0205OQ30506500-248A**
6.750	6.140	0.248	6.749	361	**0205OQ30506750-248A**
7.000	6.390	0.248	6.999	362	**0205OQ30507000-248A**
+.005/-.000	**+.000/-.005**	**+.008/-.000**	**+.000/-.004**		
7.250	6.640	0.248	7.248	363	**0205OQ30507250-248A**
7.500	6.890	0.248	7.498	364	**0205OQ30507500-248A**
7.750	7.140	0.248	7.748	365	**0205OQ30507750-248A**

*If used with wear rings, refer to wear ring piston diameter, see Section 9.

Parker Hannifin Corporation
Engineered Polymer Systems Division
Phone: 801 972 3000

Table 7-55. OQ Gland Dimensions — Inch (Continued)

A Bore Diameter	B Groove Diameter	C Groove Width	D Piston Diameter*	O-ring Dash Number	Part Number
+.005/-.000	+.000/-.005	+.008/-.000	+.000/-.004		
8.000	7.390	0.248	7.998	366	**0205OQ30508000-248A**
8.250	7.640	0.248	8.248	367	**0205OQ30508250-248A**
8.500	7.890	0.248	8.498	368	**0205OQ30508500-248A**
8.750	8.140	0.248	8.748	369	**0205OQ30508750-248A**
9.000	8.390	0.248	8.998	370	**0205OQ30509000-248A**
9.250	8.640	0.248	9.248	371	**0205OQ30509250-248A**
9.500	8.890	0.248	9.498	372	**0205OQ30509500-248A**
9.750	9.140	0.248	9.748	373	**0205OQ30509750-248A**
10.000	9.390	0.248	9.998	374	**0205OQ30510000-248A**
10.500	9.890	0.248	10.498	376	**0205OQ30510500-248A**
11.000	10.390	0.248	10.998	377	**0205OQ30511000-248A**
11.500	10.890	0.248	11.498	378	**0205OQ30511500-248A**
+.006/-.000	+.000/-.006	+.008/-.000	+.000/-.005		
12.000	11.173	0.319	11.998	451	**0205OQ41412000-319A**
12.500	11.673	0.319	12.498	452	**0205OQ41412500-319A**
13.000	12.173	0.319	12.998	453	**0205OQ41413000-319A**
13.500	12.673	0.319	13.498	454	**0205OQ41413500-319A**
14.000	13.173	0.319	13.998	455	**0205OQ41414000-319A**
14.500	13.673	0.319	14.498	456	**0205OQ41414500-319A**
15.000	14.173	0.319	14.998	457	**0205OQ41415000-319A**
15.500	14.673	0.319	15.498	458	**0205OQ41415500-319A**
16.000	15.173	0.319	15.998	459	**0205OQ41416000-319A**
16.500	15.673	0.319	16.498	460	**0205OQ41416500-319A**
17.000	16.173	0.319	16.998	461	**0205OQ41417000-319A**
17.500	16.673	0.319	17.498	462	**0205OQ41417500-319A**
18.000	17.173	0.319	17.998	463	**0205OQ41418000-319A**
18.500	17.673	0.319	18.498	464	**0205OQ41418500-319A**
19.000	18.173	0.319	18.998	465	**0205OQ41419000-319A**
19.500	18.673	0.319	19.498	466	**0205OQ41419500-319A**
+.007-.000	+.000/-.007	+.008/-.000	+.000/-.005		
20.000	19.173	0.319	19.998	467	**0205OQ41420000-319A**

*If used with wear rings, refer to wear ring piston diameter, see Section 9.

NOTE: For sizes larger than those shown in the table, please contact your local Parker Seal representative.

Part Number Nomenclature —OQ Profile

Table 7-56. OQ Profile — Metric

M 2 0 5 OQ 0 7 . 8 2 0 0 - 6 . 3 A

Seal Compound
4-Digit Material Code
(First digit "0" replaced with "M" for Metric)
Example:
M205 =15% Fiberglass-,
5% MoS_2-filled
PTFE

Profile

Gland Depth (mm)
Example: 07.8 = 7.8mm

Bore Diameter (mm)
(3 digits; use leading zeros if needed)
Example:
002 = 2mm
020 = 20mm
200 = 200mm

Groove Width (mm)
Example: 6.3 = 6.3mm
(Include decimal as needed)

Energizer Material Code
A = 70A Nitrile
Omit = No energizer
See Table 3-5, page 3-18.

09/01/07

Parker Hannifin Corporation
Engineered Polymer Systems Division
Phone: 801 972 3000

Gland Dimensions — OQ Profile

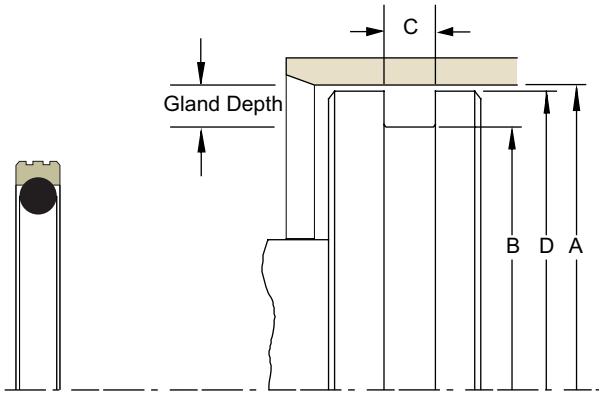

Please refer to Engineering Section 2, Page 2-8 for surface finish and additional hardware considerations.

Table 7-57. OQ Profile — Metric

A Bore Diameter	B Groove Diameter	C Groove Width	D Piston Diameter*	O-ring Dash Number	Part Number
H9	h9	+.20/-.00	h8		
8.00	3.10	2.20	7.97	006	**M205OQ02.5008-2.2A**
10.00	5.10	2.20	9.97	008	**M205OQ02.5010-2.2A**
12.00	7.10	2.20	11.97	010	**M205OQ02.5012-2.2A**
16.00	11.10	2.20	15.97	016	**M205OQ02.5016-2.2A**
20.00	15.10	2.20	19.97	015	**M205OQ02.5020-2.2A**
22.00	17.10	2.20	21.97	016	**M205OQ02.5022-2.2A**
25.00	20.10	2.20	24.97	018	**M205OQ02.5025-2.2A**
30.00	25.10	2.20	29.97	021	**M205OQ02.5030-2.2A**
32.00	27.10	2.20	31.97	023	**M205OQ02.5032-2.2A**
40.00	32.50	3.20	39.94	124	**M205OQ03.8040-3.2A**
45.00	37.50	3.20	44.94	127	**M205OQ03.8045-3.2A**
50.00	42.50	3.20	49.94	130	**M205OQ03.8050-3.2A**
55.00	47.50	3.20	54.94	133	**M205OQ03.8055-3.2A**
63.00	55.50	3.20	62.94	138	**M205OQ03.8063-3.2A**
70.00	62.50	3.20	69.94	143	**M205OQ03.8070-3.2A**
80.00	69.00	4.20	79.90	231	**M205OQ05.5080-4.2A**
90.00	79.00	4.20	89.90	234	**M205OQ05.5090-4.2A**
100.00	89.00	4.20	99.90	237	**M205OQ05.5100-4.2A**
110.00	99.00	4.20	109.90	241	**M205OQ05.5110-4.2A**
120.00	109.00	4.20	119.90	244	**M205OQ05.5120-4.2A**
125.00	114.00	4.20	124.90	245	**M205OQ05.5125-4.2A**
130.00	119.00	4.20	129.90	247	**M205OQ05.5130-4.2A**
140.00	124.50	6.30	139.90	352	**M205OQ07.8140-6.3A**
150.00	134.50	6.30	149.90	355	**M205OQ07.8150-6.3A**
160.00	144.50	6.30	159.90	358	**M205OQ07.8160-6.3A**
200.00	184.50	6.30	199.90	366	**M205OQ07.8200-6.3A**
220.00	204.50	6.30	219.90	369	**M205OQ07.8220-6.3A**
230.00	214.50	6.30	229.90	370	**M205OQ07.8230-6.3A**
240.00	224.50	6.30	239.90	372	**M205OQ07.8240-6.3A**
250.00	234.50	6.30	249.90	374	**M205OQ07.8250-6.3A**
300.00	284.50	6.30	299.90	379	**M205OQ07.8300-6.3A**
320.00	304.50	6.30	319.90	381	**M205OQ07.8320-6.3A**
400.00	379.00	8.10	399.90	458	**M205OQ10.5400-8.1A**
500.00	479.00	8.10	499.90	467	**M205OQ10.5500-8.1A**
600.00	579.00	8.10	599.90	472	**M205OQ10.5600-8.1A**

*If used with wear rings, refer to wear ring piston diameter, see Section 9.

NOTE: For sizes larger than those shown in the table, please contact your local Parker Seal representative.

09/01/07

Parker Hannifin Corporation
Engineered Polymer Systems Division
Phone: 801 972 3000

Contents

Product Offering 8-3
Decision Tree 8-4
Product Profiles
YD 8-5
SHD 8-6
SHX 8-7
SH959 8-11
SX959 8-12
AH 8-15
J 8-17
AY 8-19
H / 8600 8-21
K 8-27
AD 8-30
SG 8-36

Wiper Introduction

One of the primary causes of premature component failure in a fluid power system is contamination. Contaminants such as moisture, dirt, and dust can cause extensive damage to cylinder walls, rods, seals and other components. It has always been Parker's design philosophy to use aggressive wiping geometries to prevent the damage that is caused when trace amounts of dirt or water are allowed to enter a fluid power system. This philosophy goes hand in hand with reducing the down time and high costs associated with replacing rusted components, scored rods, filters and leaking seals.

Choosing a Wiper

Some of the considerations that need to be made when choosing a wiper include:

1. Application Requirements
2. Groove Geometry
3. Lip Geometry
4. Redundant Sealing Lips
5. Environment
6. Rod Seal Interaction

Also see the Wiper Decision Tree found on page 8-4.

1. **Application Requirements:** Whether hydraulic or pneumatic, high temperature, or low friction, Parker's broad range of materials and wiper profiles allow you to choose the right wiper for every application.

2. **Groove Geometry:** When choosing the groove geometry, machining costs, wiper costs and the costs of replacing the wiper while in the field must be considered. The majority of mobile equipment manufacturers use press-fit canned wipers. While canned wipers are more costly, the gland machining costs are less and the wiper lips are more aggressive for this harsh environment.

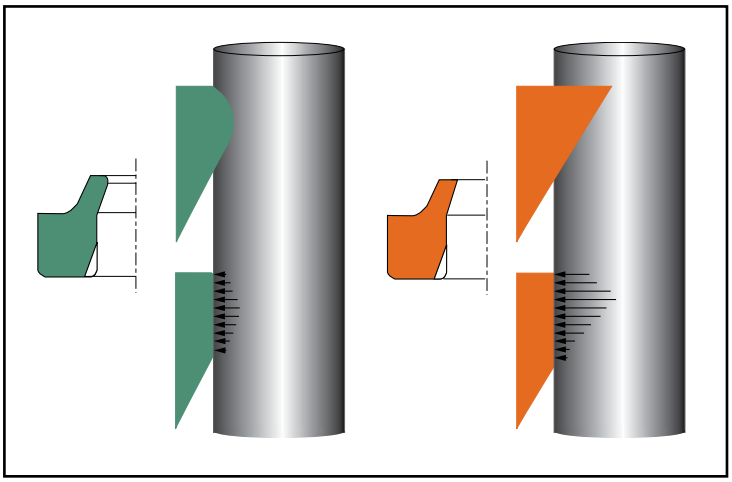

Figure 8-1. Radius vs. Straight Cut Lip Geometry

3. **Lip Geometry:** Parker wipers are designed to give the best possible exclusion performance by featuring perpendicular, or "straight-cut" lip geometries. The footprint of a sharp, straight-cut wiper causes a high concentration of forces which maximizes fluid film breakage while allowing contaminants to be pushed away from the wiping edge. (See Figure 8-1.) The footprint of a radiused lip, however,

often results in a poor concentration of forces. Although they are less costly, radiused lip geometries can also trap contamination against the rod, lifting the wiper up and opening a gateway for further contamination. For ultimate performance, Parker offers profiles with a knife trimmed wiping lip. These profiles include the YD and J profiles.

4. **Redundant Sealing Lips:** One of the most effective ways to improve a system's sealing performance is to incorporate the use of multiple or redundant sealing lips. This can be accomplished by using Parker's AY, AH, H or 8600, doubled lip profiles. Because these wipers have a redundant sealing lip, there is no way for them to relieve a pressure trap out of the system. It is critical, therefore, to pair redundant lip wipers with the correct rod seals, such as the BT and B3 u-cup profiles. These rod seal profiles enable fluid pressure relief back into the system.

5. **Environment:** In certain applications where cylinders are in a vertical or rod-up orientation, it's possible for moisture or other contaminates to collect in the wiper gland. These situations can be found in everything from forklifts and agricultural cylinders to heavy duty construction equipment that is exposed to all-weather conditions. For this reason, Parker offers several wiper profiles that feature O.D. exclusion technology to keep contamination out on both the dynamic and static surfaces. For snap-in applications, the Parker YD, SHX and SX959 profiles offer an additional lip contact to exclude contamination at the O.D. For more aggressive sealing at the O.D., Parker offers the AH and J style metal encased wipers which utilize a metal to metal interference fit for high performance in harsh environments.

6. **Rod Seal Interaction:** It is important to properly pair rod seals and wiper combinations to minimize leakage. When the rod extends past the rod seal, there is a thin film of oil that remains trapped in microscopic surface imperfections. The thickness of this film depends on the aggressiveness of the rod seal, rod surface finish and rod speed. If the rod seal chosen is less aggressive than the wiper, the wiper can wipe away the oil film during retract, resulting in system leakage.

   Examples of poor wiper/rod seal combinations include using a soft rubber u-cup with an aggressive urethane wiper, or a rod seal with net molded lips paired with a knife trimmed wiper. In both cases a less aggressive rod seal is improperly paired with a more aggressive wiper.

Parker Hannifin Corporation
Engineered Polymer Systems Division
Phone: 801 972 3000

Profiles

Table 8-1: Product Profiles

Series	Description	Application (Duty)				Page
		Light	Medium	Heavy	Pneumatic	
YD	Premium Snap-In Wiper with O.D. Exclusion Technology					8-5
SHD	Industrial Snap-In Wiper					8-6
SHX	Performance Snap-In Wiper with O.D. Exclusion Technology					8-7
SH959 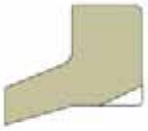	AN-Style Snap-In Wiper					8-11
SX959	Performance AN-Style Wiper with O.D. Exclusion Technology					8-12
AH 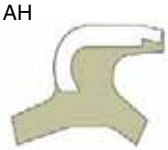	Premium Double-Lip Canned Wiper					8-15

Series	Description	Application (Duty)				Page
		Light	Medium	Heavy	Pneumatic	
J	Performance Canned Wiper					8-17
AY	Premium Double-Lip Wiper					8-19
H / 8600	Performance Double-Lip Wiper					8-21
K	Industrial Snap-In Wiper					8-27
AD	PTFE Wiper Seal					8-30
SG	Metal Scraper					8-36

Parker Hannifin Corporation
Engineered Polymer Systems Division
Phone: 801 972 3000

Wiper Decision Tree

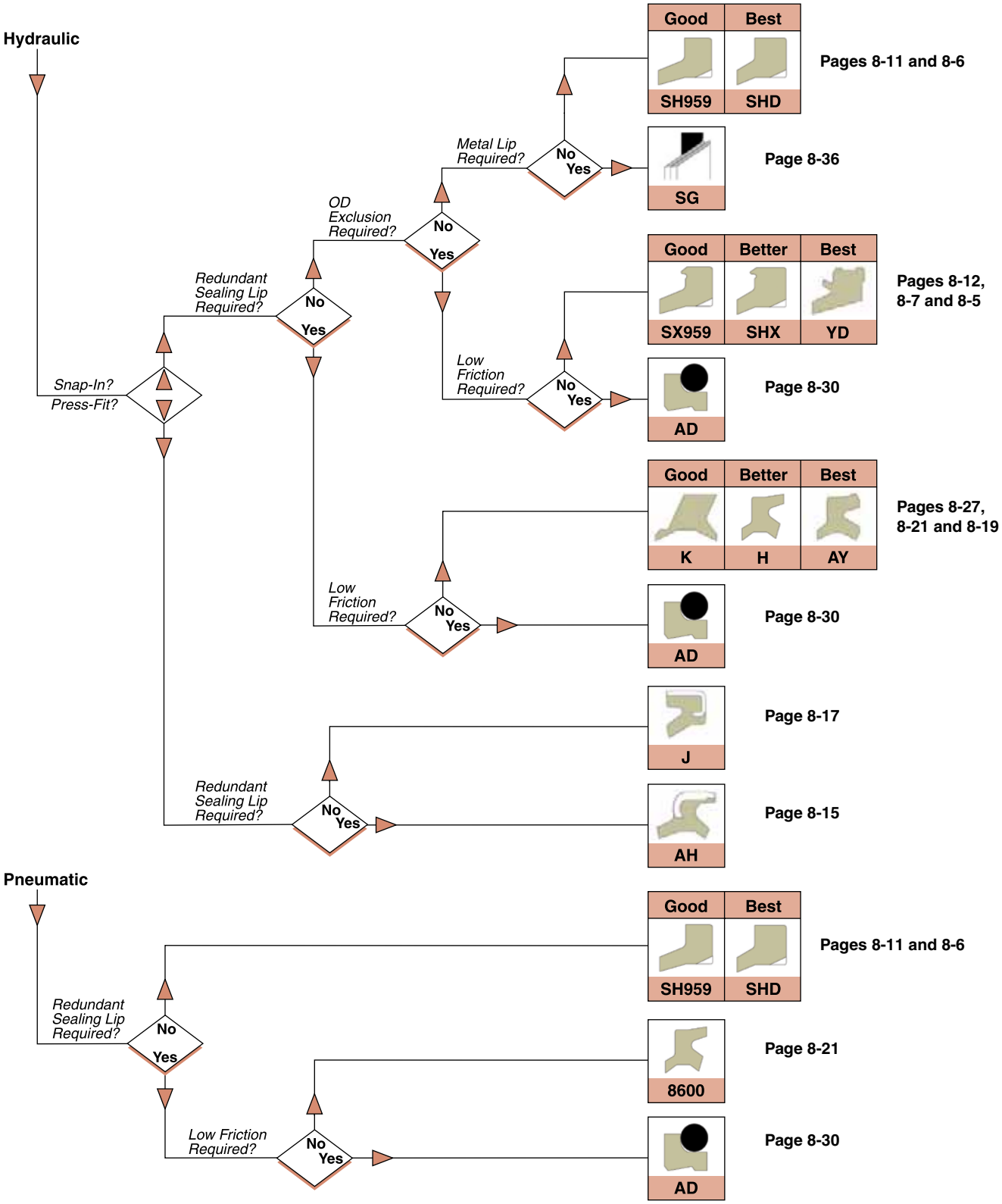

Note: Decision Tree is for Profile geometry only. Please consult pages 8-5 through 8-40 for proper material selection.

09/01/07

Parker Hannifin Corporation
Engineered Polymer Systems Division
Phone: 801 972 3000

YD Profile, Premium Snap-in Wiper with O.D. Exclusion Technology

The YD wiper is the premier design among high performance, snap-in excluders. Featuring a secondary O.D. lip which seals against the shoulder region of the gland, the YD prevents water and other contaminants from entering around the static side of the wiper. For ultimate performance, the YD also incorporates an aggressive, knife-trimmed wiping lip to ensure maximum exclusion along the rod. A true zero-radius lip provides the most effective wiping action available.

Technical Data

Standard Materials*	Temperature Range	Surface Speed
P4300A90	-65°F to 275°F (-54° to 135°C)	<1.6 ft/s (0.5 m/s)

***Alternate Materials:** For applications that may require an alternate material, please contact your local Parker Seal representative.

Part Number Nomenclature —YD Profile

Table 8-2. YD Profile — Inch

4	3	0	0	YD	0	1	5	0	0

Seal Compound
4-Digit Material Code
Example:
4300 = 90A Resilon HT Polyurethane

Profile

Nominal Rod Diameter (x1000)
Example: 1.500 x 1000 = 01500

YD Cross-Section

Gland Dimensions — YD Profile

YD gland dimensions are provided in Table 8-5 on page 8-8.

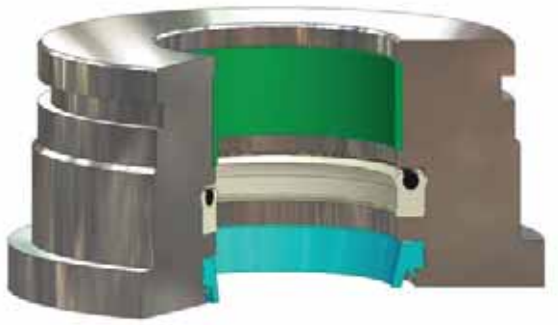

YD installed in Rod Gland

Parker Hannifin Corporation
Engineered Polymer Systems Division
Phone: 801 972 3000

SHD Profile, Industrial Snap-In Wiper

Parker SHD wipers are an outstanding choice for light and medium duty hydraulic and pneumatic applications. The slotted heel design prevents pressure traps from forming between the rod seal and wiper. Broad tooling availability, up to 30", makes the SHD a good choice for large rod diameters. The snap-in design is oversized for a snug fit and excellent stability. This makes the SHD a great all-round wiper in an economical package.

Technical Data

Standard Materials*	Temperature Range	Surface Speed
P4615A90	-65°F to 200°F (-54°C to 93°C)	<1.6 f/s (0.5 m/s)
P5065A88	-70°F to 200°F (-57°C to 93°C)	<1.6 f/s (0.5 m/s)
N4263A90	-20°F to 275°F (-29°C to 135°C)	<3.3 f/s (1.0 m/s)
V4208A90	-5°F to 400°F (-21°C to 204°C)	<3.3 f/s (1.0 m/s)
E4207A90	-65°F to 300°F (-54°F to 149°C)	<3.3 f/s (1.0 m/s)

***Alternate Materials:** For applications that may require an alternate material, please contact your local Parker Seal representative.

SHD Cross-Section

Part Number Nomenclature — SHD Profile

Table 8-3. SHD Profile — Inch

4	2	6	3	SHD	0	1	0	0	0

Seal Compound
4-Digit Material Code
Example: 4263 = Nitroxile

Profile

Nominal Rod Diameter (x1000)
Example: 1.000 x 1000 = 01000

Gland Dimensions — SHD Profile

SHD gland dimensions are provided in Table 8-5 on page 8-8.

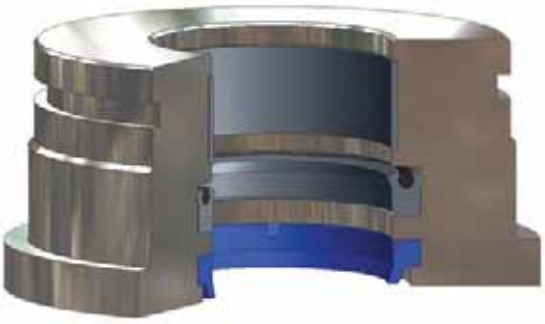

SHD installed in Rod Gland

Parker Hannifin Corporation
Engineered Polymer Systems Division
Phone: 801 972 3000

SHX Profile, Performance Snap-In Wiper with O.D. exclusion technology

Parker SHX wipers offer an improvement over standard D-style wipers by adding O.D. exclusion technology that prevents water and other contamination from entering the system from the static side of the groove. This profile is ideal for applications where the rod is positioned vertically and could allow moisture to collect in the wiper gland. SHX wipers retrofit industry standard D wiper grooves, making the upgrade process simple and economical.

Technical Data

Standard Materials*	Temperature Range	Surface Speed
P4615A90	-65°F to 200°F (-54°C to 93°C)	<1.6 ft/s (0.5 m/s)
P5065A88	-70°F to 200°F (-57°C to 93°C)	<1.6 ft/s (0.5 m/s)

***Alternate Materials:** For applications that may require an alternate material, please contact your local Parker Seal representative.

Part Number Nomenclature — SHX Profile

Table 8-4. SHX Profile — Inch

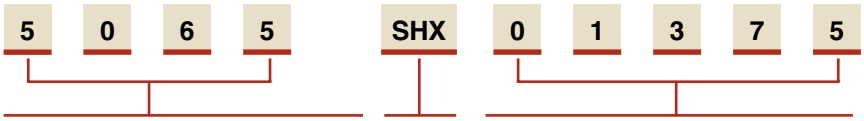

Seal Compound
4-Digit Material Code
Example: 5065 = Polyurethane
(Low Temperature Urethane)

Profile

Nominal Rod Diameter (x1000)
Example: 1.375 x 1000 = 01375

SHX Cross-Section

Gland Dimensions — SHX Profile

SHX gland dimensions are provided in Table 8-5 on page 8-8.

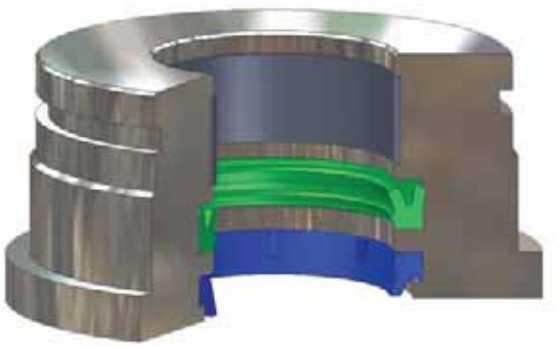

SHX installed in Rod Gland

Parker Hannifin Corporation
Engineered Polymer Systems Division
Phone: 801 972 3000

Gland Dimensions — YD, SHD and SHX Profiles

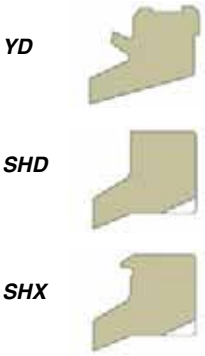

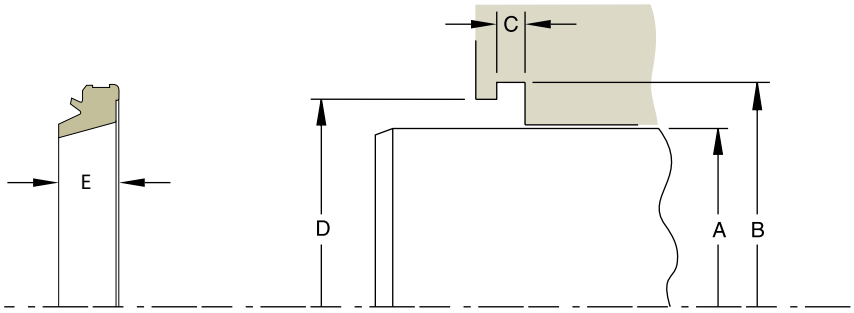

Please refer to Engineering Section 2, page 2-8 for surface finish and additional hardware considerations.

Table 8-5. YD, SHD and SHX Gland Dimensions — Inch

A Rod Diameter	B Groove Diameter	C Groove Width	D Shoulder Diameter	E Max. Wiper Axial Width	Compound Codes (X = Standard Offering)								Part Number		
					SHD					SHX		YD	Compound Code	Profile	Rod Size
					4615	5065	4263	4208	4207	4615	5065	4300			
+.000/-.002	+.006/-.000	+.004/-.000	+.005/-.000												
0.250	0.497	0.124	0.410	0.210	x	x			x				XXXX	xxx	00250
0.312	0.560	0.124	0.475	0.210	x	x	x		x				XXXX	xxx	00312
0.375	0.622	0.124	0.535	0.210	x	x			x				XXXX	xxx	00375
0.437	0.685	0.124	0.600	0.210	x	x							XXXX	xxx	00437
0.500	0.747	0.124	0.660	0.210	x	x	x	x		x	x		XXXX	xxx	00500
0.562	0.810	0.124	0.725	0.210	x	x		x					XXXX	xxx	00562
0.625	0.872	0.124	0.785	0.210	x	x		x		x	x		XXXX	xxx	00625
0.687	0.935	0.124	0.850	0.210	x	x							XXXX	xxx	00687
0.750	1.122	0.187	0.995	0.305	x	x	x	x	x	x	x	x	XXXX	xxx	00750
0.875	1.247	0.187	1.120	0.305	x	x				x	x		XXXX	xxx	00875
1.000	1.372	0.187	1.245	0.305	x	x		x		x	x	x	XXXX	xxx	01000
1.125	1.497	0.187	1.370	0.305	x	x				x	x	x	XXXX	xxx	01125
1.187	1.560	0.187	1.435	0.305	x	x							XXXX	xxx	01187
1.250	1.622	0.187	1.495	0.305	x	x				x	x	x	XXXX	xxx	01250
1.375	1.747	0.187	1.620	0.305	x	x	x			x	x	x	XXXX	xxx	01375
1.500	1.872	0.187	1.745	0.305	x	x				x	x	x	XXXX	xxx	01500
1.625	1.997	0.187	1.870	0.305	x	x	x			x	x	x	XXXX	xxx	01625
1.750	2.122	0.187	1.995	0.305	x	x	x	x	x	x	x	x	XXXX	xxx	01750
1.875	2.247	0.187	2.120	0.305	x	x	x			x	x	x	XXXX	xxx	01875
2.000	2.497	0.249	2.327	0.395	x	x	x		x	x	x	x	XXXX	xxx	02000
+.000/-.003	+.006/-.000	+.004/-.000	+.005/-.000												
2.125	2.622	0.249	2.452	0.395	x	x		x		x	x		XXXX	xxx	02125
2.250	2.747	0.249	2.577	0.395	x	x	x	x		x	x	x	XXXX	xxx	02250
2.375	2.872	0.249	2.702	0.395	x	x		x					XXXX	xxx	02375
2.500	2.997	0.249	2.827	0.395	x	x	x			x	x	x	XXXX	xxx	02500
2.625	3.122	0.249	2.952	0.395	x	x	x	x				x	XXXX	xxx	02625

For custom groove calculations, see Appendix C.

Parker Hannifin Corporation
Engineered Polymer Systems Division
Phone: 801 972 3000

Table 8-5. YD, SHD and SHX Gland Dimensions — Inch (Continued)

A Rod Diameter	B Groove Diameter	C Groove Width	D Shoulder Diameter	E Max. Wiper Axial Width	Compound Codes (X = Standard Offering)								Part Number		
					SHD					SHX		YD	Compound Code	Profile	Rod Size
					4615	5065	4263	4208	4207	4615	5065	4300			
+.000/-.003	+.006/-.000	+.004/-.000	+.005/-.000												
2.750	3.247	0.249	3.077	0.395	x	x	x	x				x	XXXX	xxx	02750
2.875	3.372	0.249	3.202	0.395	x	x	x	x				x	XXXX	xxx	02875
3.000	3.497	0.249	3.327	0.395	x	x		x		x	x	x	XXXX	xxx	03000
3.125	3.622	0.249	3.452	0.395	x	x							XXXX	xxx	03125
3.250	3.747	0.249	3.577	0.395	x	x	x					x	XXXX	xxx	03250
3.375	3.872	0.249	3.702	0.395	x	x		x					XXXX	xxx	03375
3.500	3.997	0.249	3.827	0.395	x	x	x	x				x	XXXX	xxx	03500
3.625	4.122	0.249	3.952	0.395	x	x	x						XXXX	xxx	03625
3.750	4.247	0.249	4.077	0.395	x	x	x	x					XXXX	xxx	03750
3.875	4.372	0.249	4.202	0.395	x	x	x	x					XXXX	xxx	03875
4.000	4.497	0.249	4.327	0.395	x	x	x	x	x	x	x	x	XXXX	xxx	04000
4.125	4.622	0.249	4.452	0.395			x						XXXX	xxx	04125
4.250	4.747	0.249	4.577	0.395	x	x	x	x	x			x	XXXX	xxx	04250
4.375	4.872	0.249	4.702	0.395	x	x							XXXX	xxx	04375
4.500	5.247	0.374	4.993	0.585	x	x	x	x	x			x	XXXX	xxx	04500
4.625	5.372	0.374	5.118	0.585			x	x					XXXX	xxx	04625
4.750	5.497	0.374	5.243	0.585	x	x	x						XXXX	xxx	04750
4.875	5.622	0.374	5.368	0.585	x	x	x						XXXX	xxx	04875
5.000	5.747	0.374	5.493	0.585	x	x	x	x				x	XXXX	xxx	05000
5.250	5.997	0.374	5.743	0.585	x	x	x						XXXX	xxx	05250
5.375	6.122	0.374	5.868	0.585	x	x							XXXX	xxx	05375
5.500	6.247	0.374	5.993	0.585	x	x	x					x	XXXX	xxx	05500
5.625	6.372	0.374	6.118	0.585	x	x							XXXX	xxx	05625
5.750	6.497	0.374	6.243	0.585				x					XXXX	xxx	05750
5.875	6.622	0.374	6.368	0.585	x	x							XXXX	xxx	05875
6.000	6.747	0.374	6.493	0.585	x	x	x	x	x				XXXX	xxx	06000
+.000/-.004	+.006/-.000	+.004/-.000	+.005/-.000												
6.250	6.997	0.374	6.743	0.585			x	x	x				XXXX	xxx	06250
6.500	7.247	0.374	6.993	0.585	x	x	x						XXXX	xxx	06500
6.750	7.497	0.374	7.243	0.585			x						XXXX	xxx	06750
7.000	7.747	0.374	7.493	0.585	x	x		x					XXXX	xxx	07000
7.250	7.997	0.374	7.743	0.585			x	x					XXXX	xxx	07250
7.500	8.247	0.374	7.993	0.585			x	x					XXXX	xxx	07500
7.750	8.497	0.374	8.243	0.585									XXXX	xxx	07750
8.000	8.747	0.374	8.493	0.585	x	x	x	x					XXXX	xxx	08000
8.250	8.997	0.374	8.743	0.585				x					XXXX	xxx	08250
8.500	9.247	0.374	8.993	0.585	x	x							XXXX	xxx	08500
+.000/-.005	+.006/-.000	+.004/-.000	+.005/-.000												
8.750	9.497	0.374	9.243	0.585			x						XXXX	xxx	08750
9.000	9.747	0.374	9.493	0.585	x	x						x	XXXX	xxx	09000
10.000	10.997	0.499	10.659	0.775	x	x							XXXX	xxx	10000
10.750	11.747	0.499	11.409	0.775									XXXX	xxx	10625
11.000	11.997	0.499	11.659	0.775	x	x							XXXX	xxx	11000
12.000	12.997	0.499	12.659	0.775	x	x							XXXX	xxx	12000
12.500	13.497	0.499	13.159	0.775	x	x							XXXX	xxx	12500
14.000	14.997	0.499	14.659	0.775	x	x		x					XXXX	xxx	14000

For custom groove calculations, see Appendix C.

Parker Hannifin Corporation
Engineered Polymer Systems Division
Phone: 801 972 3000

Table 8-5. YD, SHD and SHX Gland Dimensions — Inch (Continued)

A Rod Diameter	B Groove Diameter	C Groove Width	D Shoulder Diameter	E Max. Wiper Axial Width	Compound Codes (X = Standard Offering)								Part Number		
					SHD					SHX		YD	Compound Code	Profile	Rod Size
					4615	5065	4263	4208	4207	4615	5065	4300			
+.000/-.005	+.006/-.000	+.004/-.000	+.005/-.000												
14.750	15.747	0.499	15.409	0.775	x								XXXX	xxx	14750
15.000	15.997	0.499	15.659	0.775	x								XXXX	xxx	15000
16.000	16.997	0.499	16.659	0.775	x	x							XXXX	xxx	16000
20.000	20.997	0.499	20.659	0.775	x	x							XXXX	xxx	20000
30.000	30.997	0.499	30.659	0.775	x	x							XXXX	xxx	30000

For custom groove calculations, see Appendix C.

NOTE: For sizes larger than those shown in the table, please contact your local Parker Seal representative.

Parker Hannifin Corporation
Engineered Polymer Systems Division
Phone: 801 972 3000

SH959 Profile, AN-Style Snap-In Wiper

Parker SH959 wipers are AN style excluders designed to ensure proper fit with all MS-28776 (MS-33675) dash size grooves. The slotted heel design prevents pressure traps from forming between the rod seal and wiper. This profile of wiper requires very little radial or axial space. This is why they are ideal in light to medium duty hydraulic and pneumatic applications where such space constraints are present.

Technical Data

Standard Materials*	Temperature Range	Surface Speed
P4615A90	-65°F to 200°F (-54°C to 93°C)	<1.6 ft/s (0.5 m/s)
P5065A88	-70°F to 200°F (-57°C to 93°C)	<1.6 ft/s (0.5 m/s)
N4263A90	-20°F to 275°F (-29°C to 135°C)	<3.3 ft/s (1.0 m/s)
V4208A90	-5°F to 400°F (-21°C to 204°C)	<3.3 ft/s (1.0 m/s)
E4207A90	-65°F to 300°F (-54°C to 149°C)	<3.3 ft/s (1.0 m/s)

***Alternate Materials:** For applications that may require an alternate material, please contact your local Parker Seal representative.

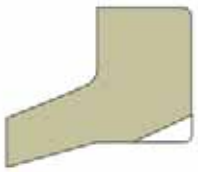

SH959 Cross-Section

Part Number Nomenclature — SH959 Profile

Table 8-6. SH959 Profile — Inch

4	2	6	3	SH959	–	2	1
Seal Compound 4-Digit Material Code Example: 4263 = Nitroxile				Profile	959 Dash Size Example: 21 = 2.000" Rod Diameter		

Gland Dimensions — SH959 Profile

SH959 gland dimensions are provided in Table 8-8 on page 8-13.

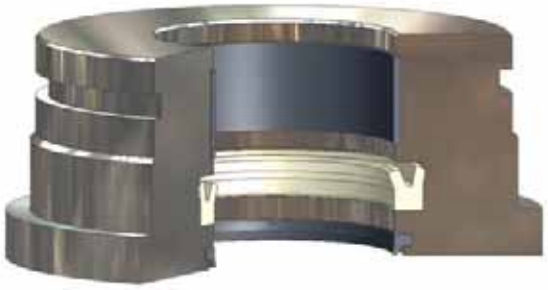

SH959 installed in Rod Gland

Parker Hannifin Corporation
Engineered Polymer Systems Division
Phone: 801 972 3000

Wiper
SX959 Profile

SX959 Profile, Performance AN-Style Wiper with O.D. exclusion technology

Parker's SX959 profile takes AN wipers to a new level by adding O.D. exclusion technology, while still retrofitting MS-28776 (MS-33675) dash size grooves. SX959 wipers offer the same compact size advantages as the SH959, while also improving contaminant exclusion in light to medium duty hydraulic and pneumatic applications.

Technical Data

Standard Materials*	Temperature Range	Surface Speed
P4615A90	-65°F to 200°F (-54°C to 93°C)	<1.6 ft/s (0.5 m/s)
P5065A88	-70°F to 200°F (-57°C to 93°C)	<1.6 ft/s (0.5 m/s)

***Alternate Materials:** For applications that may require an alternate material, please contact your local Parker Seal representative.

Part Number Nomenclature — SX959 Profile

Table 8-7. SX959 Profile — Inch

SX Cross-Section

5	0	6	5	SX959	–	1	1
Seal Compound 4-Digit Material Code Example: 5065 = Polyurethane (Low Temperature Urethane)				Profile		959 Dash Size Example: 11 = 1.125" Rod Diameter	

Gland Dimensions — SX959 Profile

SX959 gland dimensions are provided in Table 8-8 on page 8-13.

SX959 installed in Rod Gland

Parker Hannifin Corporation
Engineered Polymer Systems Division
Phone: 801 972 3000

Wiper SH959 and SX959 Gland Dimensions

Gland Dimensions — SH959 and SX959 Profiles

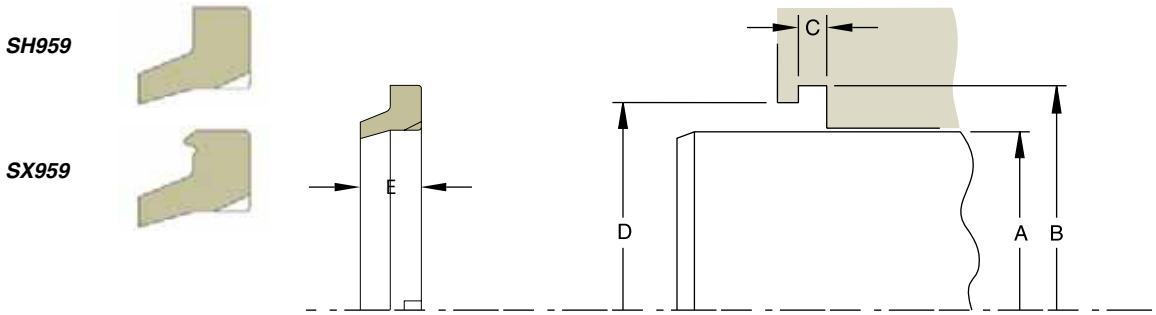

Please refer to Engineering Section 2, page 2-8 for surface finish and additional hardware considerations.

Table 8-8. SH959 and SX959 Gland Dimensions — Inch

Dash Size	A Rod Diameter	B Groove Diameter	C Groove Width	D Shoulder Diameter	E Max. Wiper Axial Width	Compound Code (X = Standard Offering)							Part Number		
						SH959					SX959		Compound Code	Profile	
						4615	5065	4263	4208	4207	4615	5065			
	+.000/-.002	+.004/-.000	+.003/-.003	+.005/-.000											
-1	0.500	0.760	0.107	0.647	0.187	x	x	x	x	x	x	x	XXXX	xxxxx	959-01
-2	0.562	0.823	0.107	0.710	0.187	x	x						XXXX	xxxxx	959-02
-3	0.625	0.885	0.107	0.772	0.187	x	x	x	x		x	x	XXXX	xxxxx	959-03
-4	0.687	0.948	0.107	0.834	0.187	x	x	x					XXXX	xxxxx	959-04
-5	0.750	1.010	0.107	0.897	0.187	x	x		x	x	x	x	XXXX	xxxxx	959-05
-6	0.812	1.084	0.107	0.960	0.187	x	x			x			XXXX	xxxxx	959-06
-7	0.875	1.147	0.107	1.023	0.187	x	x	x	x		x	x	XXXX	xxxxx	959-07
-9	1.000	1.272	0.107	1.148	0.187	x	x	x	x	x	x	x	XXXX	xxxxx	959-09
-10	1.062	1.334	0.107	1.210	0.187	x	x	x		x			XXXX	xxxxx	959-10
-11	1.125	1.397	0.107	1.273	0.187	x	x	x	x		x	x	XXXX	xxxxx	959-11
-12	1.187	1.459	0.107	1.335	0.187	x	x						XXXX	xxxxx	959-12
-13	1.250	1.522	0.107	1.398	0.187	x	x			x	x	x	XXXX	xxxxx	959-13
-14	1.312	1.614	0.107	1.480	0.187	x	x	x	x	x			XXXX	xxxxx	959-14
-15	1.375	1.677	0.107	1.542	0.187	x	x				x	x	XXXX	xxxxx	959-15
-16	1.437	1.739	0.107	1.605	0.187	x	x						XXXX	xxxxx	959-16
-17	1.500	1.802	0.107	1.668	0.187	x	x		x		x	x	XXXX	xxxxx	959-17
-M	1.562	1.865	0.107	1.731	0.187	x	x						XXXX	xxxxx	959-M
-18	1.625	1.927	0.107	1.793	0.187	x	x				x	x	XXXX	xxxxx	959-18
-19	1.750	2.052	0.107	1.918	0.187	x	x		x		x	x	XXXX	xxxxx	959-19
-A	1.812	2.115	0.107	1.981	0.187	x	x						XXXX	xxxxx	959-A
-20	1.875	2.117	0.107	2.043	0.187	x	x				x	x	XXXX	xxxxx	959-20
-21	2.000	2.302	0.107	2.178	0.187	x	x	x	x	x	x	x	XXXX	xxxxx	959-21
	+.000/-.003	+.004/-.000	+.003/-.003	+.005/-.000											
-22	2.125	2.427	0.107	2.303	0.187	x	x		x		x	x	XXXX	xxxxx	959-22
-23	2.250	2.552	0.107	2.428	0.187	x	x				x	x	XXXX	xxxxx	959-23
-24	2.375	2.677	0.107	2.553	0.187	x	x		x				XXXX	xxxxx	959-24
-25	2.500	2.802	0.107	2.678	0.187	x	x		x	x	x	x	XXXX	xxxxx	959-25

For custom groove calculations, see Appendix C.

Parker Hannifin Corporation
Engineered Polymer Systems Division
Phone: 801 972 3000

Table 8-8. SH959 and SX959 Gland Dimensions — Inch (Continued)

Dash Size	A Rod Diameter	B Groove Diameter	C Groove Width	D Shoulder Diameter	E Max. Wiper Axial Width	Compound Code (X = Standard Offering)							Part Number		
						SH959					SX959		Compound Code	Profile	
						4615	5065	4263	4208	4207	4615	5065			
	+.000/-.003	+.004/-.000	+.003/-.003	+.005/-.000											
-26	2.625	2.989	0.122	2.834	0.211	x	x						XXXX	xxxxx	959-26
-27	2.750	3.114	0.122	2.959	0.211	x	x	x	x		x	x	XXXX	xxxxx	959-27
-28	2.875	3.239	0.122	3.084	0.211	x	x						XXXX	xxxxx	959-28
-29	3.000	3.364	0.122	3.209	0.211	x	x		x	x	x	x	XXXX	xxxxx	959-29
-30	3.125	3.489	0.122	3.334	0.211	x	x						XXXX	xxxxx	959-30
-31	3.250	3.614	0.122	3.459	0.211	x	x						XXXX	xxxxx	959-31
-32	3.375	3.739	0.122	3.584	0.211	x	x						XXXX	xxxxx	959-32
-33	3.500	3.864	0.122	3.709	0.211	x	x		x	x			XXXX	xxxxx	959-33
-34	3.625	3.989	0.122	3.834	0.211				x				XXXX	xxxxx	959-34
-35	3.750	4.114	0.122	3.959	0.211	x	x						XXXX	xxxxx	959-35
-36	3.875	4.239	0.122	4.084	0.211	x	x						XXXX	xxxxx	959-36
-37	4.000	4.427	0.138	4.240	0.238	x	x		x	x	x	x	XXXX	xxxxx	959-37
-38	4.125	4.552	0.138	4.365	0.238	x	x						XXXX	xxxxx	959-38
-39	4.250	4.677	0.138	4.490	0.238	x	x		x				XXXX	xxxxx	959-39
-41	4.500	4.927	0.138	4.740	0.238	x	x						XXXX	xxxxx	959-41
-42	4.625	5.052	0.138	4.865	0.238	x	x						XXXX	xxxxx	959-42
-43	4.750	5.177	0.138	4.990	0.238	x	x						XXXX	xxxxx	959-43
-45	5.000	5.427	0.138	5.240	0.238	x	x	x	x	x			XXXX	xxxxx	959-45
-47	5.250	5.677	0.138	5.490	0.238	x	x						XXXX	xxxxx	959-47
-49	5.500	5.927	0.138	5.740	0.238	x	x						XXXX	xxxxx	959-49
-51	5.750	6.239	0.154	6.022	0.264	x	x						XXXX	xxxxx	959-51
-53	6.000	6.489	0.154	6.272	0.264	x	x		x				XXXX	xxxxx	959-53
	+.000/-.004	+.005/-.000	+.003/-.003	+.005/-.000											
-55	6.500	6.989	0.154	6.772	0.264	x	x						XXXX	xxxxx	959-55
-56	6.750	7.239	0.154	7.022	0.264	x	x						XXXX	xxxxx	959-56
-57	7.000	7.489	0.154	7.272	0.264	x	x			x			XXXX	xxxxx	959-57
-L	7.375	7.864	0.154	7.647	0.264	x	x						XXXX	xxxxx	959-L
-59	7.500	7.989	0.154	7.772	0.264	x	x						XXXX	xxxxx	959-59
-62	8.500	8.989	0.154	8.772	0.264	x	x						XXXX	xxxxx	959-62
	+.000/-.005	+.005/-.000	+.003/-.003	+.010/-.000											
-63	9.000	9.489	0.154	9.272	0.264	x	x		x				XXXX	xxxxx	959-63
-64	9.500	9.989	0.154	9.772	0.264	x	x						XXXX	xxxxx	959-64
-65	10.000	10.489	0.154	10.272	0.264	x	x						XXXX	xxxxx	959-65
-66	10.500	10.989	0.154	10.772	0.264	x	x						XXXX	xxxxx	959-66
-FF	11.250	11.739	0.169	11.522	0.289	x	x						XXXX	xxxxx	959-FF
-68	11.500	11.989	0.169	11.772	0.289	x	x						XXXX	xxxxx	959-68
-69	12.000	12.489	0.169	12.272	0.289	x	x						XXXX	xxxxx	959-69
-70	12.500	12.989	0.169	12.772	0.289	x	x						XXXX	xxxxx	959-70
-K	13.750	14.239	0.169	14.022	0.289	x	x						XXXX	xxxxx	959-K
-77	14.000	14.489	0.169	14.272	0.289	x	x						XXXX	xxxxx	959-77
-Q	14.250	14.739	0.169	14.522	0.289	x	x						XXXX	xxxxx	959-Q

For custom groove calculations, see Appendix C.

NOTE: For sizes larger than those shown in the table, please contact your local Parker Seal representative.

Parker Hannifin Corporation
Engineered Polymer Systems Division
Phone: 801 972 3000

AH Profile, Premium Double-Lip Canned Wiper

Parker's AH profile is the ultimate metal-clad excluder for heavy duty hydraulic applications. Press-fit installation prevents O.D. contamination while the additional sealing lip works in conjunction with Parker rod seals to provide redundant sealing for leakage reduction. An aggressive wiping lip, facing the environment, ensures the utmost performance in contaminant exclusion along the rod.

IMPORTANT: When using the AH wiper in conjunction with other rod seals, it is important to select a rod seal profile that enables pressure relief of fluid into the system, otherwise a pressure trap may form between the wiper and rod seal. Suggested rod profiles are the BT, BS, and B3 u-cups.

Technical Data

Standard Materials*	Temperature Range	Surface Speed
P4300A90	-65°F to 275°F (-54°C to 135°C)	<1.6 ft/s (0.5 m/s)
P4700A90	-65° to 200°F (-54°C to 93°C)	<1.6 ft/s (0.5 m/s)
P4615A90	-65°F to 200°F (-54°C to 93°C)	<1.6 ft/s (0.5 m/s)

***Alternate Materials:** For applications that may require an alternate material, please contact your local Parker Seal representative.

AH Cross-Section

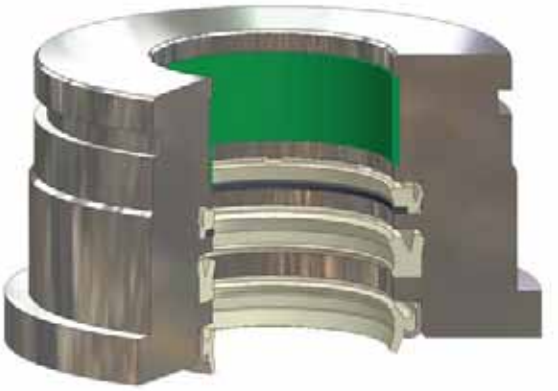

AH installed in Rod Gland

Parker Hannifin Corporation
Engineered Polymer Systems Division
Phone: 801 972 3000

Part Number Nomenclature — AH Profile

Table 8-9. AH Profile — Inch

4	3	0	0	AH	0	2	5	0	0

Seal Compound
4-Digit Material Code
Example:
4300 = 90A Resilon HT Polyurethane

Profile

Nominal Rod Diameter (x1000)
Example: 2.500 x 1000 = 02500

Gland Dimensions — AH Profile

AH gland dimensions are provided in Table 8-11 on page 8-18.

Parker Hannifin Corporation
Engineered Polymer Systems Division
Phone: 801 972 3000

J Profile, Performance Canned Wiper

The press-fit installation of Parker's J wiper guards against O.D. contamination and results in simple counter-bore groove machining. The wiping lip on the J wiper is very aggressive, eliminating the ingression of dust, mud and moisture from harsh work areas. J wipers are ideal for medium and heavy duty hydraulic cylinders in the most demanding applications.

Technical Data

Standard Materials*	Temperature Range	Surface Speed
P4300A90	-65°F to 275°F (-54°C to 135°C)	<1.6 ft/s (0.5 m/s)
P4700A90	-65° to 200°F (-54°C to 93°C)	<1.6 ft/s (0.5 m/s)
P4615A90	-65°F to 200°F (-54°C to 93°C)	<1.6 ft/s (0.5 m/s)

***Alternate Materials:** For applications that may require an alternate material, please contact your local Parker Seal representative.

Part Number Nomenclature — J Profile

Table 8-10. J Profile — Inch

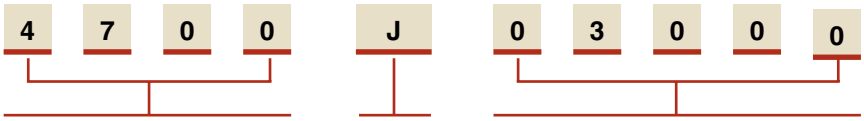

Seal Compound
4-Digit Material Code
Example:
4700 = Polyurethane

Profile

Nominal Rod Diameter (x1000)
Example: 3.00 x 1000 = 03000

J Cross-Section

Gland Dimensions — J Profile

J gland dimensions are provided in Table 8-11 on page 8-18.

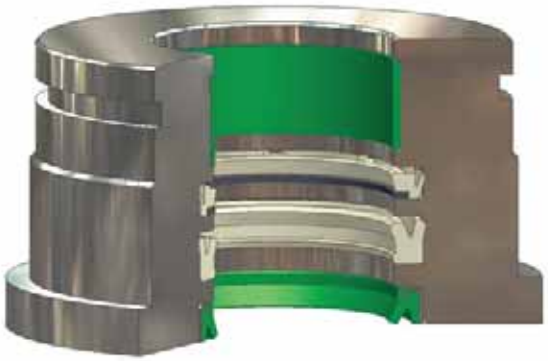

J installed in Rod Gland

Parker Hannifin Corporation
Engineered Polymer Systems Division
Phone: 801 972 3000

Gland Dimensions — AH and J Profiles

AH

J

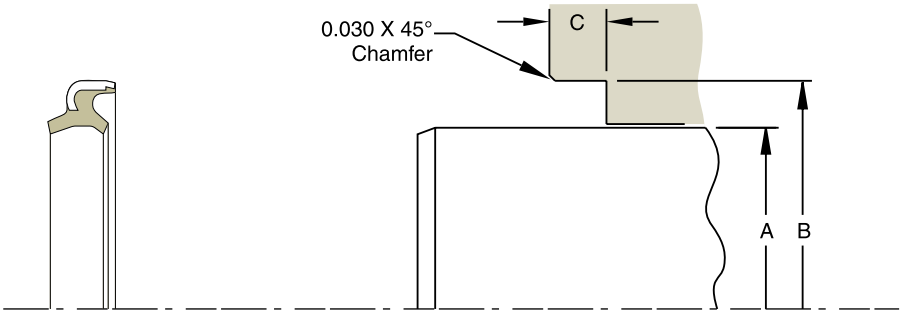

Please refer to Engineering Section 2, page 2-8 for surface finish and additional hardware considerations.

Table 8-11. AH and J Gland Dimensions — Inch

A Rod Diameter	B Groove Diameter	C Groove Width	Profile Code*		Part Number		
			AH	J	Compound Code	Profile Code	Rod Size
+.000/ -.002	**+.001/ -.001**	**+.015/ -.000**					
0.500	1.000	0.250		x	**XXXX**	**xx**	**00500**
0.625	1.125	0.312	x	x	**XXXX**	**xx**	**00625**
0.750	1.250	0.312	x	x	**XXXX**	**xx**	**00750**
0.875	1.375	0.312	x	x	**XXXX**	**xx**	**00875**
1.000	1.500	0.312	x	x	**XXXX**	**xx**	**01000**
1.125	1.625	0.312	x	x	**XXXX**	**xx**	**01125**
1.250	1.750	0.312	x	x	**XXXX**	**xx**	**01250**
1.375	1.875	0.312	x	x	**XXXX**	**xx**	**01375**
1.500	2.000	0.312	x	x	**XXXX**	**xx**	**01500**
1.625	2.125	0.312	x	x	**XXXX**	**xx**	**01625**
1.750	2.250	0.312	x	x	**XXXX**	**xx**	**01750**
1.875	2.375	0.312	x	x	**XXXX**	**xx**	**01875**
2.000	2.500	0.312	x	x	**XXXX**	**xx**	**02000**
+.000/ -.003	**+.001/ -.001**	**+.015/ -.000**					
2.125	2.625	0.312	x	x	**XXXX**	**xx**	**02125**
2.250	2.750	0.312	x	x	**XXXX**	**xx**	**02250**
2.375	2.875	0.312		x	**XXXX**	**xx**	**02375**
2.500	3.000	0.312	x	x	**XXXX**	**xx**	**02500**
2.625	3.125	0.312		x	**XXXX**	**xx**	**02625**
2.750	3.250	0.312	x	x	**XXXX**	**xx**	**02750**
2.875	3.375	0.312			**XXXX**	**xx**	**02875**
3.000	3.500	0.312	x	x	**XXXX**	**xx**	**03000**

*X = Standard Offering
For custom groove calculations, see Appendix C.

A Rod Diameter	B Groove Diameter	C Groove Width	Profile Code*		Part Number		
			AH	J	Compound Code	Profile Code	Rod Size
+.000/ -.003	**+.001/ -.001**	**+.015/ -.000**					
3.250	3.875	0.312		x	**XXXX**	**xx**	**03250**
3.500	4.125	0.312		x	**XXXX**	**xx**	**03500**
3.750	4.375	0.312		x	**XXXX**	**xx**	**03750**
4.000	4.625	0.312	x	x	**XXXX**	**xx**	**04000**
4.250	4.875	0.312		x	**XXXX**	**xx**	**04250**
4.500	5.125	0.312		x	**XXXX**	**xx**	**04500**
4.750	5.375	0.312			**XXXX**	**xx**	**04750**
5.000	5.625	0.312		x	**XXXX**	**xx**	**05000**
5.250	5.875	0.312			**XXXX**	**xx**	**05250**
5.500	6.125	0.375		x	**XXXX**	**xx**	**05500**
5.750	6.375	0.375			**XXXX**	**xx**	**05750**
6.000	6.625	0.375			**XXXX**	**xx**	**06000**
+.000/ -.004	**+.001/ -.001**	**+.015/ -.015**					
6.250	6.875	0.375			**XXXX**	**xx**	**06250**
6.500	7.125	0.375			**XXXX**	**xx**	**06500**
6.750	7.375	0.375			**XXXX**	**xx**	**06750**
7.000	7.625	0.375			**XXXX**	**xx**	**07000**
7.250	7.875	0.375			**XXXX**	**xx**	**07250**
7.500	8.125	0.375			**XXXX**	**xx**	**07500**
7.750	8.375	0.375			**XXXX**	**xx**	**07750**
8.000	8.625	0.375			**XXXX**	**xx**	**08000**

*X = Standard Offering
For custom groove calculations, see Appendix C.

NOTE: For sizes larger than those shown in the table, please contact your local Parker Seal representative.

09/01/07

Parker Hannifin Corporation
Engineered Polymer Systems Division
Phone: 801 972 3000

AY Profile, Premium Double-Lipped Wiper

The AY profile can be used as a heavy to light duty wiper. When used in high pressure applications in conjunction with the proper Parker rod seals, the AY compliments the sealing system by providing an additional beveled sealing lip, yielding excellent film-breaking and the driest rod sealing available. These dual acting features also enable it to be used by itself in low pressure applications as both the rod seal and the wiper. Knife-trimmed sealing lips ensure the best possible film breaking.

IMPORTANT: When using the AY wiper in conjunction with other rod seals, it is important to select a rod seal profile that enables pressure relief of fluid into the system, otherwise a pressure trap may form between the wiper and rod seal. Suggested rod profiles are the BT, BS, and B3 u-cups.

Technical Data

Standard Materials*	Temperature Range	Surface Speed
P4300A90	-65°F to 275°F (-54°C to 135°C)	<1.6 ft/s (0.5 m/s)
P4301A90	-35°F to 225°F (-37°C to 107°C)	<1.6 ft/s (0.5 m/s)
P4700A90	-65° to 200°F (-54°C to 93°C)	<1.6 ft/s (0.5 m/s)

***Alternate Materials:** For applications that may require an alternate material, please contact your local Parker Seal representative.

AY Cross-Section

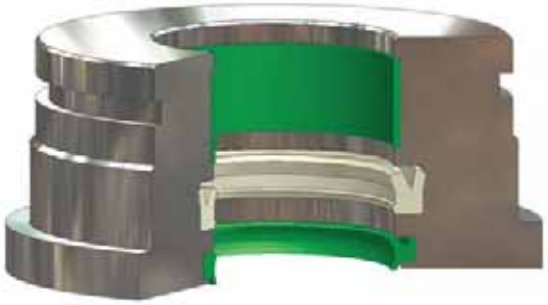

AY installed in Rod Gland

Parker Hannifin Corporation
Engineered Polymer Systems Division
Phone: 801 972 3000

Part Number Nomenclature — AY Profile

Table 8-12. AY Profile — Inch

4	3	0	0	AY	0	1	7	5	0
Seal Compound 4-Digit Material Code Example: 4300 = Polyurethane (Resilon HT)				Profile	Nominal Rod Diameter (x1000) Example: 1.75 x 1000 = 01750				

Part Number Nomenclature — AY Profile

Table 8-13. AY Profile — Inch

M	3	0	0	AY	0	4	.	0	0	3	5	-	4	.	5
Seal Compound 4-Digit Material Code (First digit “4” replaced with “M” for Metric) Example: M300 = Resilon				Profile	Gland Depth (mm) or Seal Nominal Radial Cross-Section Example: 04.0 = 4.0mm				Seal Nominal I.D. (mm) Example: 035 = 35mm				Seal Nominal Width (mm) Example: 4.5 = 4.5mm		

Gland Dimensions — AY Profile — Inch

AY gland dimensions are provided in Table 8-15 on page 8-23.

8

Gland Dimensions — AY Profile — Metric

AY gland dimensions for metric sizes are provided in Table 8-16 on page 8-26.

Parker Hannifin Corporation
Engineered Polymer Systems Division
Phone: 801 972 3000

Wiper
H and 8600 Profiles

H and 8600 Profiles, Performance Double-Lip Wiper

Parker's H and 8600 style wipers are double-lip excluders sharing identical geometries for combining the actions of rod sealing and wiping. H wipers, available in plastic compounds, are intended for medium pressure hydraulic applications as a redundant rod seal or for low pressure systems as the sole rod seal and wiper. 8600 wipers, available in rubber compounds, are typically used for pneumatic cylinders where lower friction is required. As with the H wiper, the 8600 can be used in tandem with another rod seal or by itself as a dual-acting sealing/wiping unit.

IMPORTANT: When using H and 8600 wipers in conjunction with other rod seals, it is important to select a rod seal profile that enables pressure relief of fluid into the system, otherwise a pressure trap may form between the wiper and rod seal. Suggested rod profiles are the BT, BS, B3, 8400, 8500 and E5 u-cups.

H / 8600 Cross-Section

Technical Data

Standard Materials*	Temperature Range	Surface Speed
P4615A90 (H)	-65°F to 200°F (-54°C to 93°C)	<1.6 ft/s (0.5 m/s)
P5065A88 (H)	-70°F to 200°F (-57°C to 93°C)	<1.6 ft/s (0.5 m/s)
N4181A80 (8600)	-40°F to 250°F (-40°C to 121°C)	<3.3 ft/s (1.0 m/s)

***Alternate Materials:** For applications that may require an alternate material, please contact your local Parker Seal representative.

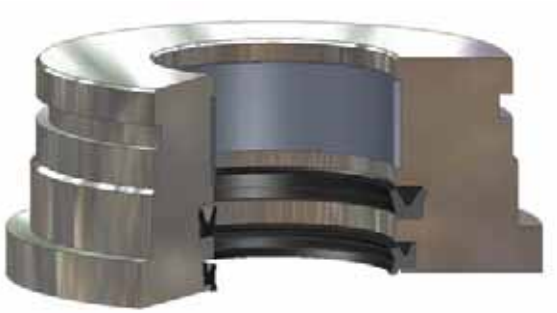

H and 8600 installed in Rod Gland

Parker Hannifin Corporation
Engineered Polymer Systems Division
Phone: 801 972 3000

www.parkerseals.com

Part Number Nomenclature — H and 8600 Profiles

Table 8-14. H and 8600 Profiles — Inch

4	6	1	5	H	0	1	2	5	0
4	1	8	1	8600	0	1	2	5	0

Seal Compound
4-Digit Material Code
Example: 4615 = Molythane
4181 = Nitrile

Profile

Nominal Rod Diameter (x1000)
Example: 1.25 x 1000 = 01250

Gland Dimensions — H and 8600 Profiles

H and 8600 gland dimensions are provided in Table 8-15 on page 8-23.

Parker Hannifin Corporation
Engineered Polymer Systems Division
Phone: 801 972 3000

Wiper AY, H and 8600 Gland Dimensions

Gland Dimensions — AY, H and 8600 Profiles — Inch

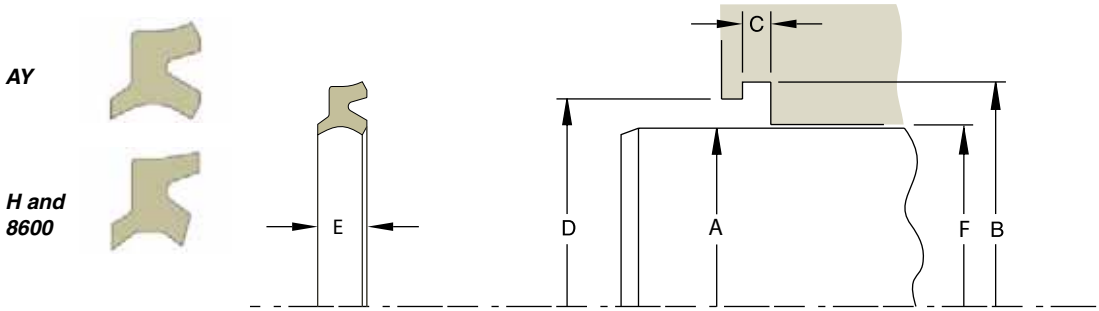

Please refer to Engineering Section 2, page 2-8 for surface finish and additional hardware considerations.

Table 8-15. AY, H and 8600 Gland Dimensions — Inch

A Rod Diameter	B Groove Diameter	C Groove Width	D Shoulder Diameter	E Max. Wiper Axial Width	F Throat Diameter	Profile Code (X = Standard Offering)			Part Number		
						AY	H	8600	Compound Code	Profile	Rod Size
+.000/-.002	+.002/-.000	+.005/-.000	+.002/-.000		+.002/-.000						
0.250	0.552	0.203	0.370	0.245	0.251		x	x	XXXX	xxxx	00250
0.312	0.615	0.203	0.432	0.245	0.313		x	x	XXXX	xxxx	00312
0.375	0.677	0.203	0.495	0.245	0.376		x	x	XXXX	xxxx	00375
0.437	0.740	0.203	0.557	0.245	0.438		x	x	XXXX	xxxx	00437
0.500	0.802	0.203	0.620	0.245	0.501	x	x	x	XXXX	xxxx	00500
0.562	0.865	0.203	0.682	0.245	0.563		x	x	XXXX	xxxx	00562
0.625	0.927	0.203	0.745	0.245	0.626	x	x	x	XXXX	xxxx	00625
0.687	0.990	0.203	0.808	0.245	0.688		x	x	XXXX	xxxx	00687
0.750	1.052	0.203	0.870	0.245	0.751	x	x	x	XXXX	xxxx	00750
0.812	1.177	0.218	0.947	0.275	0.813		x		XXXX	xxxx	00812
0.875	1.240	0.218	1.010	0.275	0.876	x	x	x	XXXX	xxxx	00875
0.937	1.302	0.218	1.072	0.275	0.938		x		XXXX	xxxx	00937
1.000	1.365	0.218	1.135	0.275	1.001	x	x	x	XXXX	xxxx	01000
1.062	1.427	0.218	1.197	0.275	1.063		x		XXXX	xxxx	01062
1.125	1.490	0.218	1.260	0.275	1.126	x	x	x	XXXX	xxxx	01125
1.187	1.552	0.218	1.322	0.275	1.188		x		XXXX	xxxx	01187
1.250	1.615	0.218	1.385	0.275	1.251	x	x	x	XXXX	xxxx	01250
1.312	1.702	0.218	1.447	0.275	1.313		x	x	XXXX	xxxx	01312
1.375	1.740	0.218	1.510	0.275	1.376	x	x	x	XXXX	xxxx	01375
1.437	1.802	0.218	1.572	0.275	1.438		x		XXXX	xxxx	01437
1.500	1.865	0.218	1.635	0.275	1.501	x	x	x	XXXX	xxxx	01500
1.562	1.927	0.218	1.697	0.275	1.563		x		XXXX	xxxx	01562
1.625	1.990	0.218	1.760	0.275	1.626	x	x	x	XXXX	xxxx	01625
1.687	2.052	0.218	1.823	0.275	1.688		x		XXXX	xxxx	01687
1.750	2.115	0.218	1.885	0.275	1.751	x	x	x	XXXX	xxxx	01750
1.812	2.177	0.218	1.947	0.275	1.813		x		XXXX	xxxx	01812
1.875	2.240	0.218	2.010	0.275	1.876	x	x	x	XXXX	xxxx	01875
1.937	2.302	0.218	2.072	0.275	1.938		x		XXXX	xxxx	01937
2.000	2.365	0.218	2.135	0.275	2.001	x	x	x	XXXX	xxxx	02000

For custom groove calculations, see Appendix C.

Parker Hannifin Corporation
Engineered Polymer Systems Division
Phone: 801 972 3000

Table 8-15. AY, H and 8600 Gland Dimensions — Inch (Continued)

A Rod Diameter	B Groove Diameter	C Groove Width	D Shoulder Diameter	E Max. Wiper Axial Width	F Throat Diameter	Profile Code (X = Standard Offering)			Part Number		
						AY	H	8600	Compound Code	Profile	Rod Size
+.000/-.003	+.003/-.000	+.005/-.000	+.003/-.000		+.003/-.000						
2.062	2.427	0.218	2.197	0.275	2.063		x		XXXX	xxxx	02062
2.125	2.490	0.218	2.260	0.275	2.126	x	x	x	XXXX	xxxx	02125
2.187	2.683	0.281	2.323	0.351	2.188		x		XXXX	xxxx	02187
2.250	2.745	0.281	2.385	0.351	2.251	x	x	x	XXXX	xxxx	02250
2.312	2.807	0.281	2.447	0.351	2.313		x		XXXX	xxxx	02312
2.375	2.870	0.281	2.510	0.351	2.376		x		XXXX	xxxx	02375
2.437	2.932	0.281	2.572	0.351	2.438		x	x	XXXX	xxxx	02437
2.500	2.995	0.281	2.635	0.351	2.501	x	x	x	XXXX	xxxx	02500
2.562	3.057	0.281	2.697	0.351	2.563		x		XXXX	xxxx	02562
2.625	3.120	0.281	2.760	0.351	2.626		x		XXXX	xxxx	02625
2.687	3.183	0.281	2.823	0.351	2.688		x		XXXX	xxxx	02687
2.750	3.245	0.281	2.885	0.351	2.751	x	x	x	XXXX	xxxx	02750
2.812	3.307	0.281	2.947	0.351	2.813		x		XXXX	xxxx	02812
2.875	3.370	0.281	3.010	0.351	2.876		x	x	XXXX	xxxx	02875
2.937	3.433	0.281	3.073	0.351	2.938		x	x	XXXX	xxxx	02937
3.000	3.495	0.281	3.135	0.351	3.001	x	x	x	XXXX	xxxx	03000
3.125	3.620	0.281	3.260	0.351	3.126		x		XXXX	xxxx	03125
3.250	3.745	0.281	3.385	0.351	3.251		x	x	XXXX	xxxx	03250
3.375	3.870	0.281	3.510	0.351	3.376		x		XXXX	xxxx	03375
3.437	3.932	0.281	3.572	0.351	3.438			x	XXXX	xxxx	03437
3.500	3.995	0.281	3.635	0.351	3.501		x	x	XXXX	xxxx	03500
3.625	4.120	0.281	3.760	0.351	3.626		x		XXXX	xxxx	03625
3.750	4.245	0.281	3.885	0.351	3.751		x	x	XXXX	xxxx	03750
3.875	4.370	0.281	4.010	0.351	3.876		x		XXXX	xxxx	03875
4.000	4.495	0.281	4.135	0.351	4.001	x	x	x	XXXX	xxxx	04000
4.125	4.620	0.281	4.260	0.351	4.126		x		XXXX	xxxx	04125
4.250	4.745	0.281	4.385	0.351	4.251		x	x	XXXX	xxxx	04250
4.375	4.870	0.281	4.510	0.351	4.376		x		XXXX	xxxx	04375
4.500	4.995	0.281	4.635	0.351	4.501		x	x	XXXX	xxxx	04500
4.625	5.120	0.281	4.760	0.351	4.626		x		XXXX	xxxx	04625
4.750	5.245	0.281	4.885	0.351	4.751		x		XXXX	xxxx	04750
4.875	5.370	0.281	5.010	0.351	4.876		x		XXXX	xxxx	04875
5.000	5.495	0.281	5.135	0.351	5.001		x	x	XXXX	xxxx	05000
5.125	5.620	0.281	5.260	0.351	5.126		x		XXXX	xxxx	05125
5.187	5.682	0.281	5.322	0.351	5.188			x	XXXX	xxxx	05187
5.250	5.745	0.281	5.385	0.351	5.251		x		XXXX	xxxx	05250
5.375	5.870	0.281	5.510	0.351	5.376		x		XXXX	xxxx	05375
5.500	5.995	0.281	5.635	0.351	5.501		x	x	XXXX	xxxx	05500
5.625	6.120	0.281	5.760	0.351	5.626		x		XXXX	xxxx	05625
5.750	6.245	0.281	5.885	0.351	5.751		x		XXXX	xxxx	05750
5.875	6.370	0.281	6.010	0.351	5.876		x		XXXX	xxxx	05875
6.000	6.495	0.281	6.135	0.351	6.001		x	x	XXXX	xxxx	06000

For custom groove calculations, see Appendix C.

Parker Hannifin Corporation
Engineered Polymer Systems Division
Phone: 801 972 3000

Table 8-15. AY, H and 8600 Gland Dimensions — Inch (Continued)

A Rod Diameter	B Groove Diameter	C Groove Width	D Shoulder Diameter	E Max. Wiper Axial Width	F Throat Diameter	Profile Code (X = Standard Offering)			Part Number		
						AY	H	8600	Compound Code	Profile	Rod Size
+.000/-.004	**+.003/-.000**	**+.005/-.000**	**+.003/-.000**		**+.003/-.000**						
6.250	6.745	0.281	6.385	0.351	6.251		x		**XXXX**	**xxxx**	**06250**
6.375	6.870	0.281	6.510	0.351	6.376			x	**XXXX**	**xxxx**	**06375**
6.500	6.995	0.281	6.635	0.351	6.501		x		**XXXX**	**xxxx**	**06500**
6.750	7.245	0.281	6.885	0.351	6.751		x		**XXXX**	**xxxx**	**06750**
7.000	7.495	0.281	7.135	0.351	7.001		x	x	**XXXX**	**xxxx**	**07000**
7.250	7.745	0.281	7.385	0.351	7.251		x	x	**XXXX**	**xxxx**	**07250**
7.500	7.995	0.281	7.635	0.351	7.501		x		**XXXX**	**xxxx**	**07500**
7.750	8.245	0.281	7.885	0.351	7.751		x		**XXXX**	**xxxx**	**07750**
8.000	8.495	0.281	8.135	0.351	8.001		x	x	**XXXX**	**xxxx**	**08000**
8.250	8.745	0.281	8.385	0.351	8.251		x		**XXXX**	**xxxx**	**08250**
8.500	8.995	0.281	8.635	0.351	8.501		x	x	**XXXX**	**xxxx**	**08500**
+.000/-.005	**+.003/-.000**	**+.005/-.000**	**+.003/-.000**		**+.003/-.000**						
8.750	9.245	0.281	8.885	0.351	8.751		x		**XXXX**	**xxxx**	**08750**
9.000	9.495	0.281	9.135	0.351	9.001		x	x	**XXXX**	**xxxx**	**09000**
9.250	9.745	0.281	9.385	0.351	9.251		x		**XXXX**	**xxxx**	**09250**
9.500	9.995	0.281	9.635	0.351	9.501		x		**XXXX**	**xxxx**	**09500**
9.750	10.245	0.281	9.885	0.351	9.751		x	x	**XXXX**	**xxxx**	**09750**
10.000	10.495	0.281	10.135	0.351	10.001		x	x	**XXXX**	**xxxx**	**10000**

For custom groove calculations, see Appendix C.

NOTE: For sizes larger than those shown in the table, please contact your local Parker Seal representative.

Parker Hannifin Corporation
Engineered Polymer Systems Division
Phone: 801 972 3000

Gland Dimensions — AY, H and 8600 Profiles — Metric

AY

H and 8600

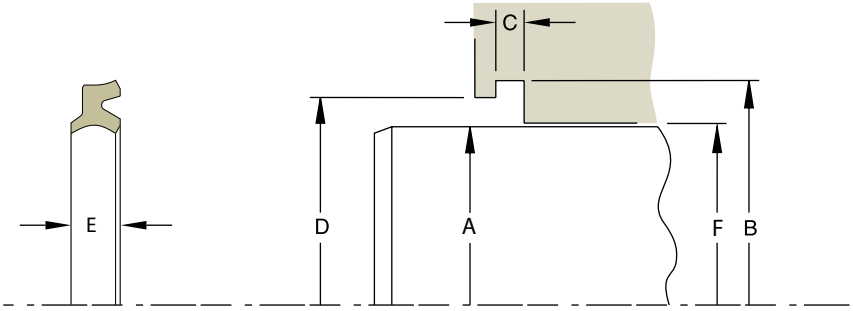

Please refer to Engineering Section 2, page 2-8 for surface finish and additional hardware considerations.

Table 8-16. AY Gland Dimensions — Metric

A Rod Diameter	B Groove Diameter	C Groove Width	D Shoulder Diameter	E Max. Wiper Axial Width	F Throat Diameter	Part Number		
f7	H11	+0.2/-0.0	H11		H8	Compound Code	Profile	
For ISO tolerances refer to Appendix F.								
10.0	16.0	4.0	12.5	4.8	10.03	**M300**	**AY**	**03.0010-3.6**
20.0	26.0	4.0	22.5	4.8	20.03	**M300**	**AY**	**03.0020-3.6**
25.0	31.0	4.0	27.5	4.8	25.03	**M300**	**AY**	**03.0025-3.6**
30.0	38.0	5.0	33.0	5.8	30.03	**M300**	**AY**	**04.0030-4.5**
32.0	40.0	5.0	35.0	5.8	32.03	**M300**	**AY**	**04.0032-4.5**
35.0	43.0	5.0	38.0	5.8	35.03	**M300**	**AY**	**04.0035-4.5**
36.0	44.0	5.0	39.0	5.8	36.03	**M300**	**AY**	**04.0036-4.5**
40.0	48.0	5.0	43.0	5.8	40.03	**M300**	**AY**	**04.0040-4.5**
42.0	50.0	5.0	45.0	5.8	42.03	**M300**	**AY**	**04.0042-4.5**
45.0	53.0	5.0	48.0	5.8	45.03	**M300**	**AY**	**04.0045-4.5**
50.0	58.0	5.5	53.0	7.0	50.03	**M300**	**AY**	**04.0050-5.0**
55.0	65.0	5.0	58.0	5.8	55.03	**M300**	**AY**	**05.0055-4.5**
55.0	65.0	6.0	58.0	6.8	55.03	**M300**	**AY**	**05.0055-5.3**
60.0	70.0	6.0	63.0	6.8	60.03	**M300**	**AY**	**05.0060-5.3**
64.0	74.0	6.0	67.0	6.8	64.03	**M300**	**AY**	**05.0064-5.3**
64.0	74.0	6.0	67.0	6.8	64.03	**M300**	**AY**	**05.0064-5.3**
70.0	80.0	6.0	73.0	6.8	70.03	**M300**	**AY**	**05.0070-5.3**
75.0	85.0	6.0	78.0	6.8	75.03	**M300**	**AY**	**05.0075-5.3**
100.0	110.0	6.0	104.0	6.8	100.03	**M300**	**AY**	**05.0100-5.3**
120.0	135.0	8.5	124.0	9.5	120.03	**M300**	**AY**	**07.5120-7.5**

Parker Hannifin Corporation
Engineered Polymer Systems Division
Phone: 801 972 3000

K Profile, Industrial Snap-In Wiper

K wipers offer a unique, light-load contact lip on both the sealing and wiping lips, making these excluders suitable for light duty industrial hydraulic applications. They are most commonly used in conjunction with Parker rod seals to provide a redundant film-breaking lip.

Technical Data

Standard Materials*	Temperature Range	Surface Speed
P4615A90	-65°F to 200°F (-54C to 93°C)	<1.6 ft/s (0.5 m/s)

***Alternate Materials:** For applications that may require an alternate material, please contact your local Parker Seal representative.

Part Number Nomenclature — K Profile

Table 8-17. K Profile — Inch

4	6	1	5	K	0	0	7	5	0

Seal Compound
4-Digit Material Code
Example:
4615 = Molythane

Profile

Nominal Rod Diameter (x1000)
Example: 0.750 x 1000 = 00750

K Cross-Section

K installed in Rod Gland

Parker Hannifin Corporation
Engineered Polymer Systems Division
Phone: 801 972 3000

Gland Dimensions — K Profile

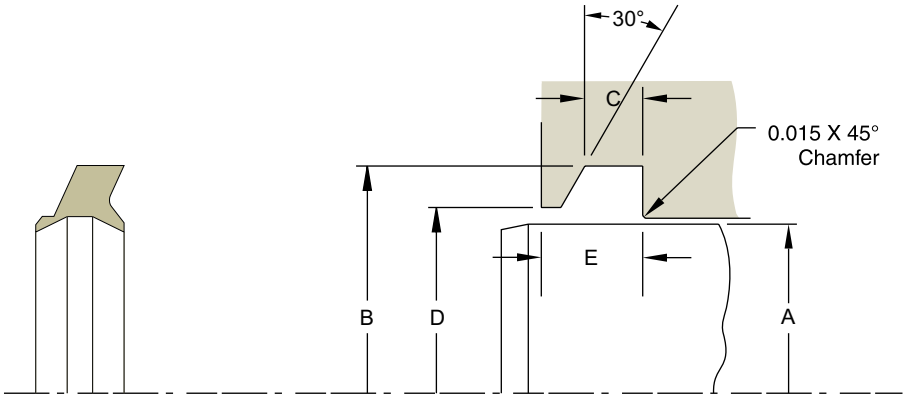

Please refer to Engineering Section 2, page 2-8 for surface finish and additional hardware considerations.

Table 8-18. K Gland Dimensions — Inch

A Rod Diameter	B Groove Diameter	C Groove Width	D Shoulder Diameter	E Max. Wiper Axial Width	Part Number
+.000/-.002	**+.005/-.000**	**+.005/-.000**	**+.005/-.000**		
0.500	0.760	0.155	0.625	0.315	**4615K00500**
0.562	0.822	0.155	0.687	0.315	**4615K00562**
0.625	0.885	0.155	0.750	0.315	**4615K00625**
0.687	0.947	0.155	0.812	0.315	**4615K00687**
0.750	1.135	0.195	0.832	0.366	**4615K00750**
0.812	1.197	0.195	0.894	0.366	**4615K00812**
0.875	1.260	0.195	0.957	0.366	**4615K00875**
0.937	1.322	0.195	1.019	0.366	**4615K00937**
1.000	1.385	0.195	1.082	0.366	**4615K01000**
1.062	1.447	0.195	1.144	0.366	**4615K01062**
1.125	1.510	0.195	1.207	0.366	**4615K01125**
1.187	1.572	0.195	1.269	0.366	**4615K01187**
1.250	1.635	0.195	1.332	0.366	**4615K01250**
1.312	1.697	0.195	1.394	0.366	**4615K01312**
1.375	1.760	0.195	1.457	0.366	**4615K01375**
1.437	1.822	0.195	1.519	0.366	**4615K01437**
1.500	1.885	0.195	1.582	0.366	**4615K01500**
1.562	1.947	0.195	1.644	0.366	**4615K01562**
1.625	2.010	0.195	1.707	0.366	**4615K01625**
1.687	2.072	0.195	1.769	0.366	**4615K01687**
1.750	2.135	0.195	1.832	0.366	**4615K01750**
1.812	2.197	0.195	1.894	0.366	**4615K01812**
1.875	2.260	0.195	1.957	0.366	**4615K01875**
1.937	2.322	0.195	2.019	0.366	**4615K01937**
2.000	2.385	0.195	2.082	0.366	**4615K02000**
+.000/-.003	**+.005/-.000**	**+.005/-.000**	**+.005/-.000**		
2.125	2.510	0.195	2.207	0.366	**4615K02125**
2.250	2.760	0.255	2.407	0.483	**4615K02250**
2.375	2.885	0.255	2.532	0.483	**4615K02375**
2.500	3.010	0.255	2.657	0.483	**4615K02500**
2.625	3.135	0.255	2.782	0.483	**4615K02625**
2.750	3.260	0.255	2.907	0.483	**4615K02750**
2.875	3.385	0.255	3.032	0.483	**4615K02875**

For custom groove calculations, see Appendix C.

Parker Hannifin Corporation
Engineered Polymer Systems Division
Phone: 801 972 3000

Table 8-18. K Gland Dimensions — Inch (Continued)

A Rod Diameter	B Groove Diameter	C Groove Width	D Shoulder Diameter	E Max. Wiper Axial Width	Part Number
+.000/-.003	**+.005/-.000**	**+.005/-.000**	**+.005/-.000**		
3.000	3.510	0.255	3.157	0.483	**4615K03000**
3.125	3.635	0.255	3.282	0.483	**4615K03125**
3.250	3.760	0.255	3.407	0.483	**4615K03250**
3.375	3.885	0.255	3.532	0.483	**4615K03375**
3.500	4.010	0.255	3.657	0.483	**4615K03500**
3.625	4.135	0.255	3.782	0.483	**4615K03625**
3.750	4.260	0.255	3.907	0.483	**4615K03750**
3.875	4.385	0.255	4.032	0.483	**4615K03875**
4.000	4.510	0.255	4.157	0.483	**4615K04000**
4.125	4.635	0.255	4.282	0.483	**4615K04125**
4.250	4.760	0.255	4.407	0.483	**4615K04250**
4.375	4.885	0.255	4.532	0.483	**4615K04375**
4.500	5.010	0.255	4.657	0.483	**4615K04500**
4.625	5.135	0.255	4.782	0.483	**4615K04625**
4.750	5.260	0.255	4.907	0.483	**4615K04750**
4.875	5.385	0.255	5.032	0.483	**4615K04875**
5.000	5.510	0.255	5.157	0.483	**4615K05000**
5.250	5.760	0.255	5.407	0.483	**4615K05250**
5.500	6.010	0.255	5.657	0.483	**4615K05500**
5.750	6.260	0.255	5.907	0.483	**4615K05750**
6.000	6.510	0.255	6.157	0.483	**4615K06000**
+.000/-.004	**+.005/-.000**	**+.005/-.000**	**+.005/-.000**		
6.250	6.760	0.255	6.407	0.483	**4615K06250**
6.500	7.010	0.255	6.657	0.483	**4615K06500**
6.750	7.260	0.255	6.907	0.483	**4615K06750**
7.000	7.510	0.255	7.157	0.483	**4615K07000**
7.500	8.010	0.255	7.657	0.483	**4615K07500**
8.000	8.510	0.255	8.157	0.483	**4615K08000**
8.500	9.010	0.255	8.657	0.483	**4615K08500**
+.000/-.005	**+.005/-.000**	**+.005/-.000**	**+.005/-.000**		
9.000	9.510	0.255	9.157	0.483	**4615K09000**
9.500	10.010	0.255	9.657	0.483	**4615K09500**
10.000	10.510	0.255	10.157	0.483	**4615K10000**

For custom groove calculations, see Appendix C.

NOTE: For sizes larger than those shown in the table, please contact your local Parker Seal representative.

AD Profile, PTFE Wiper Seal

The Parker AD profile is a double acting wiper for use in low to medium duty hydraulic cylinders. It is a two piece design comprised of a filled PTFE cap that is energized by a standard size o-ring. The wiper and seal design of the AD profile assists the primary rod seal in preventing leakage by helping seal fluid in the cylinder when the rod extends. When the cylinder rod retracts, the outside sealing edge prevents contamination from entering the system. Parker's AD profile will retrofit non-Parker wipers of similar design.

The AD profile may be ordered without the energizer. See part number nomenclature.

Technical Data

Standard Materials

Standard Materials*		Temperature Range	Surface Speed
Cap			
0401	40% bronze-filled PTFE	-200°F to 575°F -129°C to 302°C	< 5 ft/s (1.5 m/sec)
Energizer			
A	70A Nitrile	-30°F to 250°F (-34°C to 121°C)	

***Alternate Materials:** For applications that may require an alternate material, please see Section 3 for alternate PTFE (Table 3-4) and energizer (Table 3-5) materials.

Standard AD Cross-Section

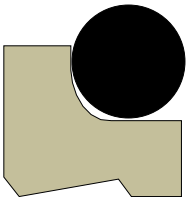

Wide AD Cross-Section

AD installed in Rod Gland

Parker Hannifin Corporation
Engineered Polymer Systems Division
Phone: 801 972 3000

Part Number Nomenclature — AD Profile

Table 8-19. AD Profile — Inch

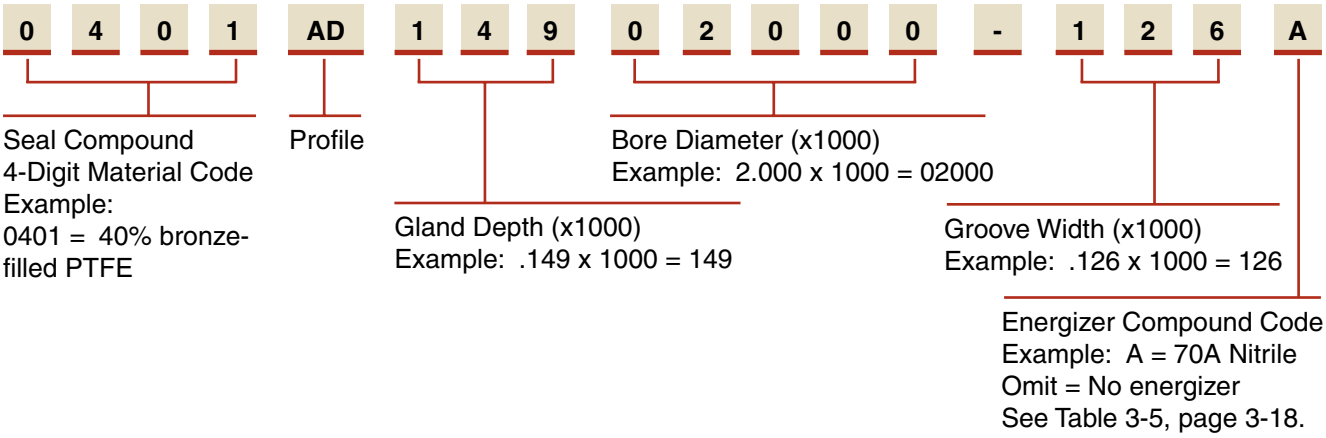

Gland Dimensions — AD Profile

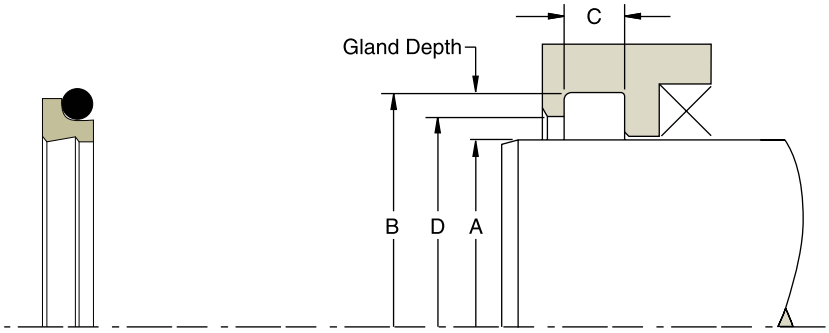

Please refer to Engineering Section 2, page 2-8 for surface finish and additional hardware considerations.

Table 8-20. AD Gland Dimensions (Standard) — Inch

A Rod Diameter	B Groove Diameter	C Groove Width	D Shoulder Diameter	O-ring Dash Number	AD Part Number (Standard)
+.000/-.002	**+.001/-.000**	**+.008/-.000**	**+.003/-.000**		
0.250	0.440	0.146	0.310	011	**0401AD09500250-146A**
0.313	0.503	0.146	0.373	012	**0401AD09500313-146A**
0.375	0.565	0.146	0.435	013	**0401AD09500375-146A**
+.000/-.002	**+.002/-.000**	**+.008/-.000**	**+.004/-.000**		
0.438	0.628	0.146	0.498	014	**0401AD09500438-146A**
0.500	0.690	0.146	0.560	015	**0401AD09500500-146A**
0.563	0.753	0.146	0.623	016	**0401AD09500563-146A**
0.625	0.815	0.146	0.685	017	**0401AD09500625-146A**
0.688	0.878	0.146	0.748	018	**0401AD09500688-146A**
0.750	0.940	0.146	0.810	019	**0401AD09500750-146A**
0.813	1.003	0.146	0.873	020	**0401AD09500813-146A**
0.875	1.065	0.146	0.935	021	**0401AD09500875-146A**
0.938	1.128	0.146	0.998	022	**0401AD09500938-146A**
1.000	1.190	0.146	1.060	023	**0401AD09501000-146A**
+.000/-.002	**+.002/-.000**	**+.008/-.000**	**+.004/-.000**		
0.500	0.770	0.196	0.560	113	**0401AD13500500-196A**
0.563	0.833	0.196	0.623	114	**0401AD13500563-196A**
0.625	0.895	0.196	0.685	115	**0401AD13500625-196A**

For custom groove calculations, see Appendix C.

09/01/07

Parker Hannifin Corporation
Engineered Polymer Systems Division
Phone: 801 972 3000
www.parkerseals.com

Table 8-20. AD Gland Dimensions (Standard) — Inch (Continued)

A Rod Diameter	B Groove Diameter	C Groove Width	D Shoulder Diameter	O-ring Dash Number	AD Part Number (Standard)
+.000/-.002	+.002/-.000	+.008/-.000	+.004/-.000		
0.688	0.958	0.196	0.748	116	**0401AD13500688-196A**
0.750	1.020	0.196	0.810	117	**0401AD13500750-196A**
0.813	1.083	0.196	0.873	118	**0401AD13500813-196A**
0.875	1.145	0.196	0.935	119	**0401AD13500875-196A**
0.938	1.208	0.196	0.998	120	**0401AD13500938-196A**
1.000	1.270	0.196	1.060	121	**0401AD13501000-196A**
1.063	1.333	0.196	1.123	122	**0401AD13501063-196A**
1.125	1.395	0.196	1.185	123	**0401AD13501125-196A**
1.188	1.458	0.196	1.248	124	**0401AD13501188-196A**
1.250	1.520	0.196	1.310	125	**0401AD13501250-196A**
1.313	1.583	0.196	1.373	126	**0401AD13501313-196A**
1.375	1.645	0.196	1.435	127	**0401AD13501375-196A**
1.438	1.708	0.196	1.498	128	**0401AD13501438-196A**
1.500	1.770	0.196	1.560	129	**0401AD13501500-196A**
1.563	1.833	0.196	1.623	130	**0401AD13501563-196A**
1.625	1.895	0.196	1.685	131	**0401AD13501625-196A**
1.688	1.958	0.196	1.748	132	**0401AD13501688-196A**
1.750	2.020	0.196	1.810	133	**0401AD13501750-196A**
1.813	2.083	0.196	1.873	134	**0401AD13501813-196A**
1.875	2.145	0.196	1.935	135	**0401AD13501875-196A**
1.938	2.208	0.196	1.998	136	**0401AD13501938-196A**
+.000/-.003	+.003/-.000	+.008/-.000	+.006/-.000		
2.000	2.270	0.196	2.060	137	**0401AD13502000-196A**
2.063	2.333	0.196	2.123	138	**0401AD13502063-196A**
2.125	2.395	0.196	2.185	139	**0401AD13502125-196A**
2.188	2.458	0.196	2.248	140	**0401AD13502188-196A**
2.250	2.520	0.196	2.310	141	**0401AD13502250-196A**
2.375	2.645	0.196	2.435	143	**0401AD13502375-196A**
2.500	2.770	0.196	2.560	145	**0401AD13502500-196A**
2.625	2.895	0.196	2.685	147	**0401AD13502625-196A**
2.750	3.020	0.196	2.810	149	**0401AD13502750-196A**
2.875	3.145	0.196	2.935	151	**0401AD13502875-196A**
3.000	3.270	0.196	3.060	151	**0401AD13503000-196A**
3.125	3.395	0.196	3.185	152	**0401AD13503125-196A**
3.250	3.520	0.196	3.310	152	**0401AD13503250-196A**
3.375	3.645	0.196	3.435	153	**0401AD13503375-196A**
3.500	3.770	0.196	3.560	153	**0401AD13503500-196A**
3.625	3.895	0.196	3.685	154	**0401AD13503625-196A**
3.750	4.020	0.196	3.810	154	**0401AD13503750-196A**
3.875	4.145	0.196	3.935	155	**0401AD13503875-196A**
4.000	4.270	0.196	4.060	155	**0401AD13504000-196A**
4.125	4.395	0.196	4.185	156	**0401AD13504125-196A**
4.250	4.520	0.196	4.310	156	**0401AD13504250-196A**
4.375	4.645	0.196	4.435	157	**0401AD13504375-196A**
4.500	4.770	0.196	4.560	157	**0401AD13504500-196A**
4.625	4.895	0.196	4.685	158	**0401AD13504625-196A**

For custom groove calculations, see Appendix C.

Parker Hannifin Corporation
Engineered Polymer Systems Division
Phone: 801 972 3000

Table 8-20. AD Gland Dimensions (Standard) — Inch (Continued)

A Rod Diameter	B Groove Diameter	C Groove Width	D Shoulder Diameter	O-ring Dash Number	AD Part Number (Standard)
+.000/-.004	**+.004/-.000**	**+.008/-.000**	**+.008/-.000**		
4.750	5.020	0.196	4.810	158	**0401AD13504750-196A**
4.875	5.145	0.196	4.935	159	**0401AD13504875-196A**
5.000	5.270	0.196	5.060	159	**0401AD13505000-196A**
5.125	5.395	0.196	5.185	160	**0401AD13505125-196A**
5.250	5.520	0.196	5.310	160	**0401AD13505250-196A**
5.375	5.645	0.196	5.435	161	**0401AD13505375-196A**
5.500	5.770	0.196	5.560	161	**0401AD13505500-196A**
5.625	5.895	0.196	5.685	162	**0401AD13505625-196A**
5.750	6.020	0.196	5.810	162	**0401AD13505750-196A**
6.000	6.270	0.196	6.060	163	**0401AD13506000-196A**
+.000/-.004	**+.004/-.000**	**+.008/-.000**	**+.008/-.000**		
6.000	6.344	0.236	6.060	258	**0401AD17206000-236A**
6.250	6.594	0.236	6.310	259	**0401AD17206250-236A**
6.500	6.844	0.236	6.560	260	**0401AD17206500-236A**
6.750	7.094	0.236	6.810	261	**0401AD17206750-236A**
7.000	7.344	0.236	7.060	262	**0401AD17207000-236A**
+.000/-.005	**+.005/-.000**	**+.008/-.000**	**+.010/-.000**		
7.250	7.594	0.236	7.310	263	**0401AD17207250-236A**
7.500	7.844	0.236	7.560	264	**0401AD17207500-236A**
7.750	8.094	0.236	7.810	265	**0401AD17207750-236A**
8.000	8.344	0.236	8.060	266	**0401AD17208000-236A**
8.250	8.594	0.236	8.310	267	**0401AD17208250-236A**
8.500	8.844	0.236	8.560	268	**0401AD17208500-236A**
8.750	9.094	0.236	8.810	269	**0401AD17208750-236A**
9.000	9.344	0.236	9.060	270	**0401AD17209000-236A**
9.250	9.594	0.236	9.310	271	**0401AD17209250-236A**
9.500	9.844	0.236	9.560	272	**0401AD17209500-236A**
9.750	10.094	0.236	9.810	273	**0401AD17209750-236A**
10.000	10.344	0.236	10.060	274	**0401AD17209875-236A**
+.000/-.005	**+.005/-.000**	**+.008/-.000**	**+.010/-.000**		
10.000	10.480	0.332	10.080	377	**0401AD24010000-332A**
10.500	10.980	0.332	10.580	378	**0401AD24010500-332A**
11.000	11.480	0.332	11.080	379	**0401AD24011000-332A**
11.500	11.980	0.332	11.580	380	**0401AD24011500-332A**
12.000	12.480	0.332	12.080	381	**0401AD24012000-332A**
+.000/-.006	**+.006/-.000**	**+.008/-.000**	**+.012/-.000**		
12.500	12.980	0.332	12.580	381	**0401AD24012500-332A**
13.000	13.480	0.332	13.080	382	**0401AD24013000-332A**
13.500	13.980	0.332	13.580	382	**0401AD24013500-332A**
14.000	14.480	0.332	14.080	383	**0401AD24014000-332A**
14.500	14.980	0.332	14.580	383	**0401AD24014500-332A**
15.000	15.480	0.332	15.080	384	**0401AD24015000-332A**
15.500	15.980	0.332	15.580	384	**0401AD24015500-332A**
16.000	16.480	0.332	16.080	385	**0401AD24016000-332A**
16.500	16.980	0.332	16.580	385	**0401AD24016500-332A**
17.000	17.480	0.332	17.080	386	**0401AD24017000-332A**

For custom groove calculations, see Appendix C.

Parker Hannifin Corporation
Engineered Polymer Systems Division
Phone: 801 972 3000

Table 8-21. AD Gland Dimensions (Wide) — Inch

A Rod Diameter	B Groove Diameter	C Groove Width	D Shoulder Diameter	O-ring Dash Number	AD Part Number (Wide)
+.000/-.002	+.002/-.000	+.008/-.000	+.004/-.000		
1.500	1.846	0.248	1.560	131	0401AD17301500-248A
1.563	1.909	0.248	1.623	132	0401AD17301563-248A
1.625	1.971	0.248	1.685	133	0401AD17301625-248A
1.688	2.034	0.248	1.748	134	0401AD17301688-248A
1.750	2.096	0.248	1.810	135	0401AD17301750-248A
1.813	2.159	0.248	1.873	136	0401AD17301813-248A
1.875	2.221	0.248	1.935	136	0401AD17301875-248A
1.938	2.284	0.248	1.998	137	0401AD17301938-248A
+.000/-.003	+.003/-.000	+.008/-.000	+.006/-.000		
2.000	2.346	0.248	2.060	138	0401AD17302000-248A
2.125	2.471	0.248	2.185	140	0401AD17302125-248A
2.250	2.596	0.248	2.310	142	0401AD17302250-248A
2.375	2.721	0.248	2.435	144	0401AD17302375-248A
2.500	2.846	0.248	2.560	146	0401AD17302500-248A
2.625	2.971	0.248	2.685	148	0401AD17302625-248A
+.000/-.003	+.003/-.000	+.008/-.000	+.006/-.000		
2.750	3.230	0.319	2.830	234	0401AD24002750-319A
2.875	3.355	0.319	2.955	235	0401AD24002875-319A
3.000	3.480	0.319	3.080	236	0401AD24003000-319A
3.125	3.605	0.319	3.205	237	0401AD24003125-319A
3.250	3.730	0.319	3.330	238	0401AD24003250-319A
3.375	3.855	0.319	3.455	239	0401AD24003375-319A
3.500	3.980	0.319	3.580	240	0401AD24003500-319A
3.625	4.105	0.319	3.705	240	0401AD24003625-319A
3.750	4.230	0.319	3.830	241	0401AD24003750-319A
3.875	4.355	0.319	3.955	242	0401AD24003875-319A
4.000	4.480	0.319	4.080	243	0401AD24004000-319A
4.125	4.605	0.319	4.205	244	0401AD24004125-319A
4.250	4.730	0.319	4.330	245	0401AD24004250-319A
4.375	4.855	0.319	4.455	246	0401AD24004375-319A
4.500	4.980	0.319	4.580	247	0401AD24004500-319A
4.625	5.105	0.319	4.705	248	0401AD24004625-319A
+.000/-.004	+.004/-.000	+.008/-.000	+.008/-.000		
4.750	5.230	0.319	4.830	249	0401AD24004750-319A
4.875	5.355	0.319	4.955	250	0401AD24004875-319A
5.000	5.480	0.319	5.080	251	0401AD24005000-319A
5.125	5.605	0.319	5.205	252	0401AD24005125-319A
5.250	5.730	0.319	5.330	253	0401AD24005250-319A
5.375	5.855	0.319	5.455	254	0401AD24005375-319A
+.000/-.004	+.004/-.000	+.008/-.000	+.008/-.000		
5.500	6.130	0.374	5.600	359	0401AD31505500-374A
5.625	6.255	0.374	5.725	360	0401AD31505625-374A

For custom groove calculations, see Appendix C.

Parker Hannifin Corporation
Engineered Polymer Systems Division
Phone: 801 972 3000

Table 8-21. AD Gland Dimensions (Wide) — Inch (Continued)

A Rod Diameter	B Groove Diameter	C Groove Width	D Shoulder Diameter	O-ring Dash Number	AD Part Number (Wide)
+.000/-.004	**+.004/-.000**	**+.008/-.000**	**+.008/-.000**		
5.750	6.380	0.374	5.850	361	**0401AD31505750-374A**
6.000	6.630	0.374	6.100	362	**0401AD31506000-374A**
6.250	6.880	0.374	6.350	363	**0401AD31506250-374A**
6.500	7.130	0.374	6.600	364	**0401AD31506500-374A**
6.750	7.380	0.374	6.850	365	**0401AD31506750-374A**
7.000	7.630	0.374	7.100	366	**0401AD31507000-374A**
+.000/-.005	**+.005/-.000**	**+.008/-.000**	**+.008/-.000**		
7.250	7.880	0.374	7.350	367	**0401AD31507250-374A**
7.500	8.130	0.374	7.600	368	**0401AD31507500-374A**
7.750	8.380	0.374	7.850	369	**0401AD31507750-374A**
8.000	8.630	0.374	8.100	370	**0401AD31508000-374A**
8.250	8.880	0.374	8.350	371	**0401AD31508250-374A**
8.500	9.130	0.374	8.600	372	**0401AD31508500-374A**
8.750	9.380	0.374	8.850	373	**0401AD31508750-374A**
9.000	9.630	0.374	9.100	374	**0401AD31509000-374A**
9.250	9.880	0.374	9.350	375	**0401AD31509250-374A**
9.500	10.130	0.374	9.600	376	**0401AD31509500-374A**
9.750	10.380	0.374	9.850	377	**0401AD31509750-374A**
+.000/-.005	**+.005/-.000**	**+.008/-.000**	**+.010/-.000**		
10.000	10.630	0.374	10.100	377	**0401AD315010000-374A**
10.500	11.130	0.374	10.600	378	**0401AD315010500-374A**
11.000	11.630	0.374	11.100	379	**0401AD315011000-374A**
11.500	12.130	0.374	11.600	380	**0401AD315011500-374A**
12.000	12.630	0.374	12.100	381	**0401AD315012000-374A**
12.500	13.130	0.374	12.600	381	**0401AD315012500-374A**
13.000	13.630	0.374	13.100	382	**0401AD315013000-374A**
13.500	14.130	0.374	13.600	382	**0401AD315013500-374A**
14.000	14.630	0.374	14.100	383	**0401AD315014000-374A**
14.500	15.130	0.374	14.600	383	**0401AD315014500-374A**
15.000	15.630	0.374	15.100	384	**0401AD315015000-374A**
15.500	16.130	0.374	15.600	384	**0401AD315015500-374A**
+.000/-.006	**+.006/-.000**	**+.008/-.000**	**+.012/-.000**		
16.000	16.944	0.551	16.100	461	**0401AD472016000-551A**
16.500	17.444	0.551	16.600	462	**0401AD472016500-551A**
17.000	17.944	0.551	17.100	463	**0401AD472017000-551A**
17.500	18.444	0.551	17.600	464	**0401AD472017500-551A**
18.000	18.944	0.551	18.100	465	**0401AD472018000-551A**
18.500	19.444	0.551	18.600	466	**0401AD472018500-551A**
19.000	19.944	0.551	19.100	467	**0401AD472019000-551A**
19.500	20.444	0.551	19.600	468	**0401AD472019500-551A**
20.000	20.944	0.551	20.100	469	**0401AD472020000-551A**

For custom groove calculations, see Appendix C.

NOTE: For sizes larger than those shown in the table, please contact your local Parker Seal representative.

SG Profile, Metal Scraper

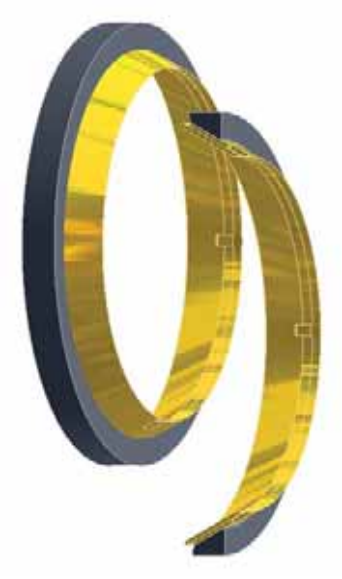

Parker is pleased to offer SG profile metal scrapers as a means to remove the toughest, most abrasive contaminants that may adhere to cylinder rods, including ice, adhesives, coatings, tape and other potentially damaging materials. By using rubber energizing elements behind the dual-contact scrapers, SG provides the best possible removal of stubborn contaminants.

Technical Data

Standard Materials*	Energizer	Scraper Ring	Temperature Range
N6017	Commercial Nitrile	Bronze	-40°F to 250°F (-40°C to 121°C)
V6083	Commercial FKM	Bronze	-5°F to 400°F (-21°C to 204°C)
4683	Commercial PTFE	Bronze	-Cryogenic to 400°F (204°C)

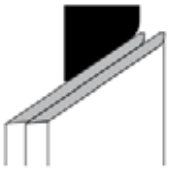

SG Cross-Section

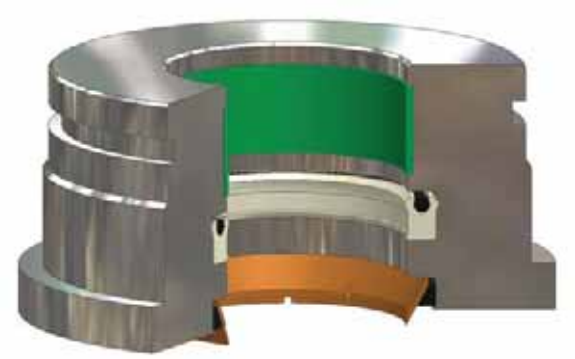

SG installed in Rod Gland

Parker Hannifin Corporation
Engineered Polymer Systems Division
Phone: 801 972 3000

Table 8-23. SG Gland Dimensions — Inch (Continued)

A Rod Diameter	B Groove Diameter	C Groove Width	D Shoulder Diameter	E Shoulder Width	Part Number
+.000/-.002	+.003/-.003	+.003/-.001	+.000/-.010	+.015/-.000	
1.125	1.500	0.188	1.457	0.022	**XXXXSG-01125-187**
1.187	1.562	0.188	1.519	0.022	**XXXXSG-01187-187**
1.250	1.500	0.125	1.464	0.018	**XXXXSG-01250-125**
1.250	1.625	0.188	1.582	0.022	**XXXXSG-01250-187**
1.312	1.687	0.188	1.644	0.022	**XXXXSG-01312-187**
1.375	1.750	0.188	1.707	0.022	**XXXXSG-01375-187**
1.437	1.812	0.188	1.769	0.022	**XXXXSG-01437-187**
1.500	1.875	0.188	1.832	0.022	**XXXXSG-01500-187**
1.562	1.937	0.188	1.894	0.022	**XXXXSG-01562-187**
1.625	2.000	0.188	1.957	0.022	**XXXXSG-01625-187**
1.687	2.062	0.188	2.019	0.022	**XXXXSG-01687-187**
1.750	2.125	0.188	2.082	0.022	**XXXXSG-01750-187**
1.812	2.187	0.188	2.144	0.022	**XXXXSG-01812-187**
1.875	2.250	0.188	2.207	0.022	**XXXXSG-01875-187**
1.937	2.312	0.188	2.269	0.022	**XXXXSG-01937-187**
2.000	2.375	0.188	2.332	0.022	**XXXXSG-02000-187**
2.000	2.500	0.250	2.440	0.030	**XXXXSG-02000-250**
2.062	2.437	0.188	2.394	0.022	**XXXXSG-02062-187**
2.062	2.562	0.250	2.502	0.030	**XXXXSG-02062-250**
2.125	2.500	0.188	2.457	0.022	**XXXXSG-02125-187**
2.125	2.625	0.250	2.565	0.030	**XXXXSG-02125-250**
2.187	2.562	0.188	2.519	0.022	**XXXXSG-02187-187**
2.187	2.687	0.250	2.627	0.030	**XXXXSG-02187-250**
2.250	2.625	0.188	2.582	0.022	**XXXXSG-02250-187**
2.250	2.750	0.250	2.690	0.030	**XXXXSG-02250-250**
2.312	2.687	0.188	2.644	0.022	**XXXXSG-02312-187**
2.312	2.812	0.250	2.752	0.030	**XXXXSG-02312-250**
2.375	2.750	0.188	2.707	0.022	**XXXXSG-02375-187**
2.375	2.875	0.250	2.815	0.030	**XXXXSG-02375-250**
2.437	2.812	0.188	2.769	0.022	**XXXXSG-02437-187**
2.437	2.937	0.250	2.877	0.030	**XXXXSG-02437-250**
2.500	2.875	0.188	2.832	0.022	**XXXXSG-02500-187**
2.500	3.000	0.250	2.940	0.030	**XXXXSG-02500-250**
2.562	2.937	0.188	2.894	0.022	**XXXXSG-02562-187**
2.562	3.062	0.250	3.002	0.030	**XXXXSG-02562-250**
2.625	3.000	0.188	2.957	0.022	**XXXXSG-02625-187**
2.625	3.125	0.250	3.065	0.030	**XXXXSG-02625-250**
2.687	3.062	0.188	3.019	0.022	**XXXXSG-02687-187**
2.687	3.187	0.250	3.127	0.030	**XXXXSG-02687-250**
2.750	3.125	0.188	3.082	0.022	**XXXXSG-02750-187**
2.750	3.250	0.250	3.190	0.030	**XXXXSG-02750-250**
2.812	3.187	0.188	3.144	0.022	**XXXXSG-02812-187**

For custom groove calculations, see Appendix C.

Parker Hannifin Corporation
Engineered Polymer Systems Division
Phone: 801 972 3000

Table 8-23. SG Gland Dimensions — Inch (Continued)

A Rod Diameter	B Groove Diameter	C Groove Width	D Shoulder Diameter	E Shoulder Width	Part Number
+.000/-.002	+.003/-.003	+.003/-.001	+.000/-.010	+.015/-.000	
2.812	3.312	0.250	3.252	0.030	**XXXXSG-02812-250**
2.875	3.250	0.188	3.207	0.022	**XXXXSG-02875-187**
2.875	3.375	0.250	3.315	0.030	**XXXXSG-02875-250**
2.937	3.312	0.188	3.269	0.022	**XXXXSG-02937-187**
2.937	3.437	0.250	3.377	0.030	**XXXXSG-02937-250**
3.000	3.375	0.188	3.332	0.022	**XXXXSG-03000-187**
3.000	3.500	0.250	3.440	0.030	**XXXXSG-03000-250**
3.125	3.625	0.250	3.565	0.030	**XXXXSG-03125-250**
3.250	3.750	0.250	3.690	0.030	**XXXXSG-03250-250**
3.375	3.875	0.250	3.815	0.030	**XXXXSG-03375-250**
3.500	3.875	0.188	3.832	0.022	**XXXXSG-03500-187**
3.500	4.000	0.250	3.940	0.030	**XXXXSG-03500-250**
3.625	4.125	0.250	4.065	0.030	**XXXXSG-03625-250**
3.750	4.250	0.250	4.190	0.030	**XXXXSG-03750-250**
3.875	4.375	0.250	4.315	0.030	**XXXXSG-03875-250**
4.000	4.375	0.188	4.332	0.022	**XXXXSG-04000-187**
4.000	4.500	0.250	4.440	0.030	**XXXXSG-04000-250**
4.125	4.625	0.250	4.565	0.030	**XXXXSG-04125-250**
4.250	4.750	0.250	4.690	0.030	**XXXXSG-04250-250**
4.375	4.875	0.250	4.815	0.030	**XXXXSG-04375-250**
4.500	4.875	0.188	4.832	0.022	**XXXXSG-04500-187**
4.500	5.000	0.250	4.940	0.030	**XXXXSG-04500-250**
4.500	5.250	0.375	5.160	0.045	**XXXXSG-04500-375**
4.625	5.125	0.250	5.065	0.030	**XXXXSG-04625-250**
4.625	5.375	0.375	5.285	0.045	**XXXXSG-04625-375**
4.750	5.250	0.250	5.190	0.030	**XXXXSG-04750-250**
4.750	5.500	0.375	5.410	0.045	**XXXXSG-04750-375**
4.875	5.375	0.250	5.315	0.030	**XXXXSG-04875-250**
4.875	5.625	0.375	5.535	0.045	**XXXXSG-04875-375**
5.000	5.375	0.188	5.332	0.022	**XXXXSG-05000-187**
5.000	5.500	0.250	5.440	0.030	**XXXXSG-05000-250**
5.000	5.750	0.375	5.660	0.045	**XXXXSG-05000-375**
5.125	5.875	0.375	5.785	0.045	**XXXXSG-05125-375**
5.250	5.750	0.250	5.690	0.030	**XXXXSG-05250-250**
5.250	6.000	0.375	5.910	0.045	**XXXXSG-05250-375**
5.375	6.125	0.375	6.035	0.045	**XXXXSG-05375-375**
5.500	5.875	0.188	5.832	0.022	**XXXXSG-05500-187**
5.500	6.000	0.250	5.940	0.030	**XXXXSG-05500-250**
5.500	6.250	0.375	6.160	0.045	**XXXXSG-05500-375**
5.625	6.375	0.375	6.285	0.045	**XXXXSG-05625-375**
5.750	6.250	0.250	6.190	0.030	**XXXXSG-05750-250**
5.750	6.500	0.375	6.410	0.045	**XXXXSG-05750-375**

For custom groove calculations, see Appendix C.

Parker Hannifin Corporation
Engineered Polymer Systems Division
Phone: 801 972 3000

Table 8-23. SG Gland Dimensions — Inch (Continued)

A Rod Diameter	B Groove Diameter	C Groove Width	D Shoulder Diameter	E Shoulder Width	Part Number
+.000/-.002	+.003/-.003	+.003/-.001	+.000/-.010	+.015/-.000	
5.875	6.625	0.375	6.535	0.045	**XXXXSG-05875-375**
6.000	6.375	0.188	6.332	0.022	**XXXXSG-06000-187**
6.000	6.500	0.250	6.440	0.030	**XXXXSG-06000-250**
6.000	6.750	0.375	6.660	0.045	**XXXXSG-06000-375**
6.250	6.750	0.250	6.690	0.030	**XXXXSG-06250-250**
6.250	7.000	0.375	6.910	0.045	**XXXXSG-06250-375**
6.500	6.875	0.188	6.832	0.022	**XXXXSG-06500-187**
6.500	7.000	0.250	6.940	0.030	**XXXXSG-06500-250**
6.500	7.250	0.375	7.160	0.045	**XXXXSG-06500-375**
6.750	7.250	0.250	7.190	0.030	**XXXXSG-06750-250**
6.750	7.500	0.375	7.410	0.045	**XXXXSG-06750-375**
7.000	7.375	0.188	7.332	0.022	**XXXXSG-07000-187**
7.000	7.500	0.250	7.440	0.030	**XXXXSG-07000-250**
7.000	7.750	0.375	7.660	0.045	**XXXXSG-07000-375**
7.250	7.750	0.250	7.690	0.030	**XXXXSG-07250-250**
7.250	8.000	0.375	7.910	0.045	**XXXXSG-07250-375**
7.500	8.000	0.250	7.940	0.030	**XXXXSG-07500-250**
7.500	8.250	0.375	8.160	0.045	**XXXXSG-07500-375**
7.750	8.250	0.250	8.190	0.030	**XXXXSG-07750-250**
7.750	8.500	0.375	8.410	0.045	**XXXXSG-07750-375**
8.000	8.500	0.250	8.440	0.030	**XXXXSG-08000-250**
8.000	8.750	0.375	8.660	0.045	**XXXXSG-08000-375**
8.000	9.000	0.500	8.880	0.060	**XXXXSG-08000-500**
8.125	9.125	0.500	9.005	0.060	**XXXXSG-08125-500**
8.250	8.750	0.250	8.690	0.030	**XXXXSG-08250-250**
8.250	9.000	0.375	8.910	0.045	**XXXXSG-08250-375**
8.250	9.250	0.500	9.130	0.060	**XXXXSG-08250-500**
8.375	9.375	0.500	9.255	0.060	**XXXXSG-08375-500**
8.500	9.000	0.250	8.940	0.030	**XXXXSG-08500-250**
8.500	9.250	0.375	9.160	0.045	**XXXXSG-08500-375**
8.500	9.500	0.500	9.380	0.060	**XXXXSG-08500-500**
8.625	9.625	0.500	9.505	0.060	**XXXXSG-08625-500**
8.750	9.250	0.250	9.190	0.030	**XXXXSG-08750-250**
8.750	9.500	0.375	9.410	0.045	**XXXXSG-08750-375**
8.750	9.750	0.500	9.630	0.060	**XXXXSG-08750-500**
8.875	9.875	0.500	9.755	0.060	**XXXXSG-08875-500**
9.000	9.500	0.250	9.440	0.030	**XXXXSG-09000-250**
9.000	9.750	0.375	9.660	0.045	**XXXXSG-09000-375**
9.000	10.000	0.500	9.880	0.060	**XXXXSG-09000-500**
9.250	10.000	0.375	9.910	0.045	**XXXXSG-09250-375**

For custom groove calculations, see Appendix C.

Parker Hannifin Corporation
Engineered Polymer Systems Division
Phone: 801 972 3000

Table 8-23. SG Gland Dimensions — Inch (Continued)

A Rod Diameter	B Groove Diameter	C Groove Width	D Shoulder Diameter	E Shoulder Width	Part Number
+.000/-.002	+.003/-.003	+.003/-.001	+.000/-.010	+.015/-.000	
9.250	10.250	0.500	10.130	0.060	**XXXXSG-09250-500**
9.500	10.250	0.375	10.160	0.045	**XXXXSG-09500-375**
9.500	10.500	0.500	10.380	0.060	**XXXXSG-09500-500**
9.750	10.500	0.375	10.410	0.045	**XXXXSG-09750-375**
9.750	10.750	0.500	10.630	0.060	**XXXXSG-09750-500**
10.000	10.750	0.375	10.660	0.045	**XXXXSG-10000-375**
10.000	11.000	0.500	10.880	0.060	**XXXXSG-10000-500**
10.250	11.250	0.500	11.130	0.060	**XXXXSG-10250-500**
10.500	11.250	0.375	11.160	0.045	**XXXXSG-10500-375**
10.500	11.500	0.500	11.380	0.060	**XXXXSG-10500-500**
10.750	11.750	0.500	11.630	0.060	**XXXXSG-10750-500**
11.000	11.750	0.375	11.660	0.045	**XXXXSG-11000-375**
11.000	12.000	0.500	11.880	0.060	**XXXXSG-11000-500**
11.250	12.250	0.500	12.130	0.060	**XXXXSG-11250-500**
11.500	12.250	0.375	12.160	0.045	**XXXXSG-11500-375**
11.500	12.500	0.500	12.380	0.060	**XXXXSG-11500-500**
11.750	12.750	0.500	12.630	0.060	**XXXXSG-11750-500**
12.000	12.750	0.375	12.660	0.045	**XXXXSG-12000-375**
12.000	13.000	0.500	12.880	0.060	**XXXXSG-12000-500**
12.250	13.250	0.500	13.130	0.060	**XXXXSG-12250-500**
12.500	13.500	0.500	13.380	0.060	**XXXXSG-12500-500**
12.750	13.750	0.500	13.630	0.060	**XXXXSG-12750-500**
13.000	14.000	0.500	13.880	0.060	**XXXXSG-13000-500**
13.500	14.500	0.500	14.380	0.060	**XXXXSG-13500-500**
14.000	15.000	0.500	14.880	0.060	**XXXXSG-14000-500**
16.000	17.000	0.500	16.880	0.060	**XXXXSG-16000-500**
18.000	19.000	0.500	18.880	0.060	**XXXXSG-18000-500**
20.000	21.000	0.500	20.880	0.060	**XXXXSG-20000-500**

For custom groove calculations, see Appendix C.

Parker Hannifin Corporation
Engineered Polymer Systems Division
Phone: 801 972 3000

Part Number Nomenclature — SG Profile

Table 8-22. SG Profile — Inch

6	0	1	7	SG	-	0	1	5	0	0	-	1	8	7

Seal Compound
4-Digit Material Code
Example:
6017 = Nitrile/Bronze

Profile

Nominal Rod Diameter (x1000)
Example: 1.500 x 1000 = 01500

Groove Width (x1000)
Example: .187 x 1000 = 187

Gland Dimensions — SG Profile

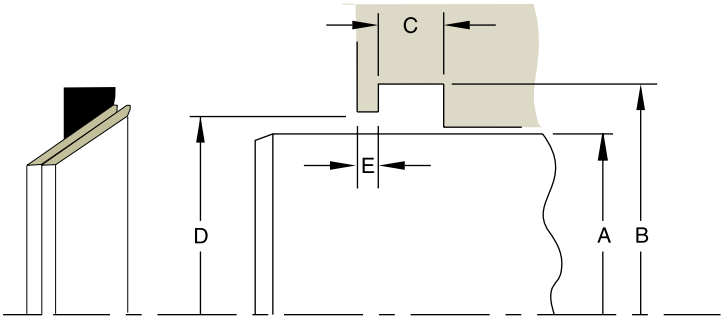

Please refer to Engineering Section 2, page 2-8 for surface finish and additional hardware considerations.

Table 8-23. SG Gland Dimensions — Inch

A Rod Diameter	B Groove Diameter	C Groove Width	D Shoulder Diameter	E Shoulder Width	Part Number
+.000/-.002	+.003/-.003	+.003/-.001	+.000/-.010	+.015/-.000	
0.250	0.500	0.125	0.464	0.018	**XXXXSG-00250-125**
0.312	0.562	0.125	0.526	0.018	**XXXXSG-00312-125**
0.375	0.625	0.125	0.589	0.018	**XXXXSG-00375-125**
0.437	0.687	0.125	0.651	0.018	**XXXXSG-00437-125**
0.500	0.750	0.125	0.714	0.018	**XXXXSG-00500-125**
0.562	0.812	0.125	0.776	0.018	**XXXXSG-00562-125**
0.625	0.875	0.125	0.839	0.018	**XXXXSG-00625-125**
0.687	0.937	0.125	0.901	0.018	**XXXXSG-00687-125**
0.750	1.000	0.125	0.964	0.018	**XXXXSG-00750-125**
0.750	1.125	0.188	1.082	0.022	**XXXXSG-00750-187**
0.812	1.062	0.125	1.026	0.018	**XXXXSG-00812-125**
0.812	1.187	0.188	1.144	0.022	**XXXXSG-00812-187**
0.875	1.125	0.125	1.089	0.018	**XXXXSG-00875-125**
0.875	1.250	0.188	1.207	0.022	**XXXXSG-00875-187**
0.937	1.187	0.125	1.151	0.018	**XXXXSG-00937-125**
0.937	1.312	0.188	1.269	0.022	**XXXXSG-00937-187**
1.000	1.250	0.125	1.214	0.018	**XXXXSG-01000-125**
1.000	1.375	0.188	1.332	0.022	**XXXXSG-01000-187**
1.062	1.437	0.188	1.394	0.022	**XXXXSG-01062-187**
1.125	1.375	0.125	1.339	0.018	**XXXXSG-01125-125**

For custom groove calculations, see Appendix C.

Parker Hannifin Corporation
Engineered Polymer Systems Division
Phone: 801 972 3000

Notes

Parker Hannifin Corporation
Engineered Polymer Systems Division
Phone: 801 972 3000

Wear Rings / Bearings

Contents

Engineering 9-2
Materials 9-4
Product Offering 9-6
Wear Rings / Bearings Profiles
WPT 9-7
WRT 9-11
WN 9-14
PDT 9-18
PDW 9-27

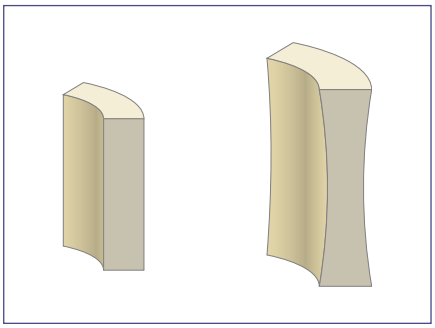

Figure 9-1. Parker's Precision-Manufactured Cross-Section (left) vs. Conventional Net-Molded Cross-Section (right).

Parker offers a complete line of wear rings and bearing products to fit any application. Expertise in both engineered hard plastics and in PTFE makes Parker the global leader for reciprocating bearing materials. By incorporating premium material blends with precision machining tolerances (down to ±.001"), Parker meets the full spectrum of needs, from heavy-duty hydraulic cylinders operating under the highest temperatures and pressures to pneumatic applications requiring low friction, long life and self-lubrication. Parker wear rings are the best way to combine high performance with economical value.

Quality Assurance

All Parker wear ring product lines are available from ISO 9000 registered operations in Salt Lake City, Utah and Elgin, Illinois. As such, wear ring production is governed by rigorous quality standards and procedures through a highly trained and qualified workforce. With the assistance of precise, accurate measurement systems and detailed workmanship criteria, Parker delivers first class quality and consistency in every shipment.

Manufacturing Excellence

Parker wear rings utilize a precision manufacturing process that achieves precise flatness on the bearing surfaces, whereas conventional net-molded bearings can form "dog bone" cross-sections. The result is optimal bearing contact area and compressive strength. The cross-sections shown at left illustrate the differences between these manufacturing methods.

Additionally, available sizing is not limited to existing tooling. *Our processes allow for virtually any width to be produced without assessing a setup charge.*

Features, Advantages and Benefits

Table 9-1.

Feature	Advantage	Benefit
Dynamic bearing surface contact	Eliminates metal-to-metal contact between components	Prevents rod, piston and seal damage due to scoring and reduces warranty costs
Precision-manufactured cross-section	Enables tighter hardware clearances than conventional wear rings	Increases seal life by reducing extrusion gaps associated with conventional wear rings
Low-friction, premium materials	Reduces frictional heat build-up	Lowers operating temperature and increases seal life
Precise flatness on bearing surface	Maximizes bearing contact area and compressive strength, eliminating the "dog bone" effect of conventional wear rings	Prolongs cylinder life through uniform sideload resistance
Advanced, high performance, polymeric materials	Metal particulates and other contaminants can be imbedded in the wear ring material	Increases cylinder life by helping to protect seals from contamination

Parker Hannifin Corporation
Engineered Polymer Systems Division
Phone: 801 972 3000

FAQs

There are many factors to consider when designing a system. Following is are the most frequently asked questions regarding bearing design and choosing the right wear ring.

What is the performance difference between standard-tolerance and tight-tolerance wear rings?

Standard-tolerance wear rings have a radial wall tolerance that is held to ±.0025", while tight-tolerance wear rings are held to ±.001" (under 6"). Tight-tolerance wear rings allow for a more precise fit of components, resulting in less dimensional "play." This allows the extrusion gap to be smaller for tight-tolerance wear rings, thus increasing the seal's pressure rating beyond that of standard-tolerance wear rings. This becomes very important at high temperatures, where pressure ratings of materials can further be reduced. Although it is critical to consider every aspect of each application, a general guideline for product selection can be found in Table 9-2 on page 9-5.

Wear ring grooves call for larger extrusion gaps. How does this affect the seals' pressure rating?

Since wear rings are used to eliminate metal-to-metal contact between moving parts, there must be a larger gap between them, thus causing a wider extrusion gap. As a result, the seal's pressure ratings will decrease. Pre-established gland dimensions outlined in this catalog always result in a minimum 0.005" clearance for metal components. As such, standard-tolerance wear rings can reduce a seal's pressure capability by up to 50%. Using tight-tolerance wear rings enables the extrusion gaps to be held closer, and the seal's pressure ratings are only reduced by up to 30%. In either case, it is important to select proper seal and back-up materials to accommodate the increased extrusion gaps. Alternatively, Parker Integrated Pistons™ boost performance by providing all of the benefits of wear rings without any increase in extrusion gap whatsoever.

For applications where the seals will be stressed toward their maximum capabilities, gland dimensions can be developed using the equations that accompany each profile. Use these equations to apply desired machining tolerances and clearances. It is critical when determining metal-to-metal clearances to consider the material's compressive properties, which can be found on page 9-5. It is equally important to evaluate how the applied tolerances will affect the seals' extrusion gap. Please contact Parker or your authorized distributor for assistance in developing alternate gland dimensions.

How is a proper bearing width selected?

When selecting a bearing width, it is crucial to evaluate the side loads that the bearings will have to withstand. Figure 9-2 shows the total pressure area, A_P, that a radial force from a side load will affect. Area, A_P is calculated as follows:

$$A_p = ØD \times W$$

where D is the bearing O.D. for pistons or the bearing I.D. for rods, and W is the bearing width.

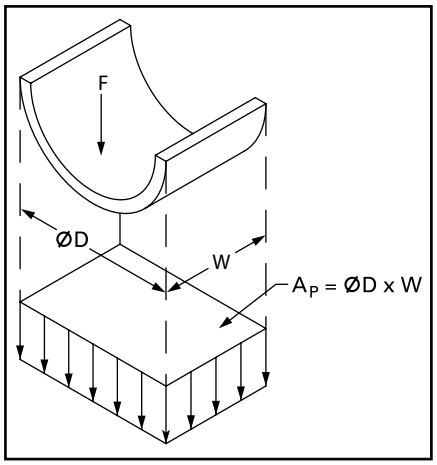

Figure 9-2: Total affected pressure area, A_P

It is important to note that the pressure distribution will not be equally dispersed across this area. Instead, the pressure profile takes the form shown in Figure 9-3. The assumed load-bearing area, A_L, can be calculated as follows:

$$A_L = \frac{A_p}{5} = \frac{ØD \times W}{5}$$

To calculate the allowable radial force, F, simply multiply the load-bearing area, A_L, by the permissible compressive load of the material, q, and divide by the desired factor of safety, FS.

To calculate the proper bearing width, W, based on a known radial force:

$$W = \frac{5 \times F}{ØD \times q} \times FS$$

Once W is calculated, round up to the next nominal width (1/8" increments).

To calculate the allowable radial force, F, based on a known bearing width:

$$F = \frac{A_L \times q}{FS} = \frac{ØD \times W \times q}{5 \times FS}$$

Permissible compressive load, q, can be found in the material properties tables on page 9-5. This value is based upon known material deflection at 73°F and at a specified load. Parker recommends a factor of safety, FS, of at least 3 to account for changes in physical properties due to increases in system temperature.

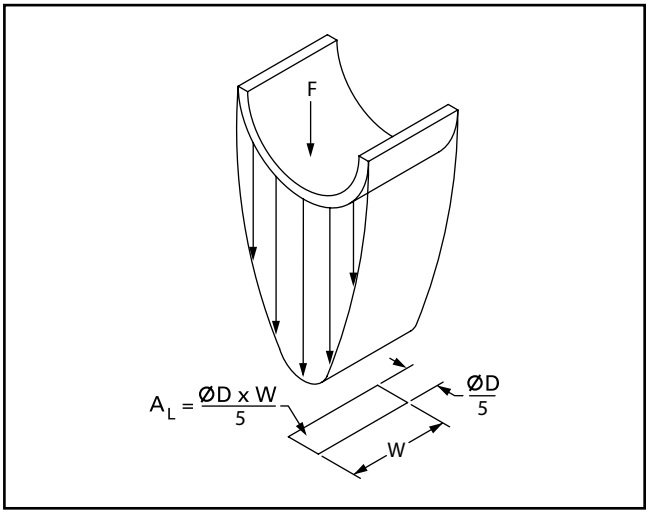

Figure 9-3: Load distribution of radial force, F, and effective load area, A_L

If additional assistance is required, please contact Parker or your authorized distributor.

What fluids are wear rings typically compatible with?

MolyGard and WearGard compounds are compatible with petroleum-based hydraulic fluids, transmission fluids, phosphate esters, and many other fluids. PTFE compounds 0401, 0307, and others have outstanding chemical compatibility with a wide range of fluids. Please contact Parker for specific inquiries.

How does moisture affect wear rings?

Due to nylon's inherent swelling in water, it is recommended that WearGard and MolyGard not be used in applications where water or moisture is present. Filled PTFE compounds or other alternative materials such as polyacetal and composite resins are recommended in such scenarios and are available from Parker.

Where should the wear ring be installed relative to the seals?

Wear rings should always be installed on the lubrication (wet) side of the seal for best performance. For rod glands, the wear ring should be on the pressure side of the rod seal. For pistons, if only one bearing is to be used, it should be on the side of the piston opposite the rod. This arrangement keeps the piston wear ring further away from the rod wear ring. This becomes critical when the rod is at full extension and provides better leveraging of the two bearing surfaces.

Which end cut should be used?

There are three types of end cuts available: butt cut, angle cut and step cut. The butt cut is the most common and most economical cut. Angle cuts and step cuts provide added performance by ensuring bearing area overlap at the wear ring's gap. In certain applications, step cut wear rings can be used as buffer seals, protecting the seal from pressure spikes. Figure 9-4 illustrates these three options.

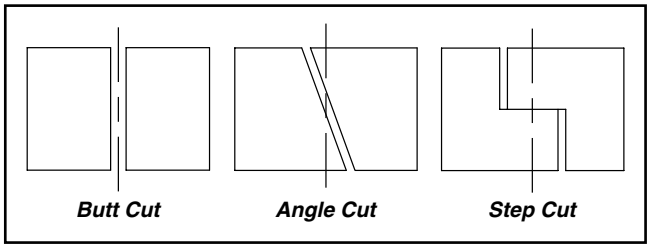

Figure 9-4: End Cuts

Parker Hannifin Corporation
Engineered Polymer Systems Division
Phone: 801 972 3000

Parker Bearing Materials

Parker bearing materials are backed by over 30 years of manufacturing expertise both in engineered hard plastics and PTFE. Our WearGard and MolyGard strength characteristics meet or exceed most metals traditionally used in wear rings. While many compounds are available, the most commonly used bearing materials are WearGard, MolyGard and filled PTFE (featured at right).

Parker also offers other engineered bearing materials for specialized applications demanding higher temperatures and sideloads. Parker's UltraComp™ CGT provides high temperature bearing performance up to 500°F. Composite, fabric-reinforced resins are also available to accommodate sideloads far more severe than glass-loaded nylon compounds can withstand. Composite resins also resist moisture swell in water-glycol emulsions and other water-based fluids. Polyacetal, Nylatron® and many different PTFE filler combinations are also available for specialized applications. Please contact Parker or your authorized distributor for assistance in selecting alternative bearing materials.

W4733 — WearGard

Heat stabilized, internally lubricated, 35% glass-reinforced nylon for tight-tolerance wear rings. WearGard is the premium material for the most severe applications due to its dimensional stability, high compressive strength and Parker's proprietary internal lubrication for reduced friction. WearGard is an extremely high endurance compound, retaining its physical properties without degradation. WearGard also features Parker's distinctive green coloring and is available in the WPT and WRT profiles.

W4650 — MolyGard

Heat stabilized, internally lubricated, 30% glass-reinforced nylon for standard-tolerance wear rings. Very similar physical properties to WearGard, but with an economical advantage. MolyGard is for use in light to medium duty hydraulic applications. Available in the WN profile.

0401 — 40% Bronze-Filled PTFE

Primarily used in light duty hydraulic applications, this self-lubricated, long-wearing material offers superior frictional characteristics and high temperature capabilities. Not recommended for use with aluminum bores and soft metal rods or in applications involving moderate to heavy sideloading. Available in the PDT and PDW profiles.

0307 — 23% Carbon, 2% Graphite-Filled PTFE

The most popular material for pneumatic applications, this self-lubricated compound ensures long life, low friction and high temperature capabilities. The carbon-graphite fillers allow for outstanding performance without the risk of scratching or scoring soft metal surfaces. Available in the PDT and PDW profiles.

Nylatron® is a registered trademark of
The Polymer Corporation, Reading, PA.

Parker Hannifin Corporation
Engineered Polymer Systems Division
Phone: 801 972 3000

Table 9-2. Physical and Mechanical Properties of Engineered Plastics

Property	Unit	W4733	W4650	W4738	0871 – 0874	Test Method
		WearGard 35% Glass-Reinforced Nylon	MolyGard 30% Glass-Reinforced Nylon	UltraCOMP CGT 10% Carbon-, 10% Graphite-, 10% PTFE-filled	Composite Fabric-Reinforced Resins	
Permissible Compressive Load, *q*	psi	21700	21700	—	65200	—
Tensile Strength	psi	18300	17500	20400	9500	ASTM D638, 73°F
Tensile Modulus	Kpsi	899	952	—	470	ASTM D638, 73°F
Compressive Strength	psi	21500	21000	21700	35000	ASTM D695, 73°F
Shear Strength	psi	9820	9390	—	—	ASTM D732, 73°F
Flexural Strength	psi	25500	22600	30500	—	ASTM D790, 73°F
Flexural Modulus	Kpsi	1100	860	1175	280	ASTM D790, 73°F
Notched IZOD Impact Strength	Ft-Lbs/in	1.15	1.37	1.69	10	ASTM D256, 73°F
Deformation Under Load	%	0.4	0.6	—	4.0	ASTM D621, 24 hrs @ 4000 psi, 73°F
Water Absorption	%	0.5	0.8	0.06	0.1	24 hour immersion, ASTM D570, 73°F
Temperature Range	°F	-65 to +275	-65 to +275	-65 to +500	-40 to +250	—
Rockwell Hardness	M Scale	87	77	100	100	ASTM D785
	R Scale	117	114	—	—	ASTM D785

Table 9-3. Physical and Mechanical Properties of PTFE Compounds

Property	Unit	0401	0307	Test Method
		40% Bronze-Filled PTFE	23% Carbon-, 2% Graphite-Filled PTFE	
Permissible Compressive Load, *q*	psi	9400	3600	—
Tensile Strength	psi	3200	2250	ASTM D1457-81A
Elongation	%	250	100	ASTM D4894
Deformation Under Load	%	3.1	2.5	ASTM D621, 24 hrs @ 2000 psi, 70°F
Coefficient of Friction	—	0.23	0.24	ASTM D3702
Temperature Range	°F	-200 to +575	-360 to +575	—
Shore D Hardness	—	65	64	ASTM D2240-75

Parker Hannifin Corporation
Engineered Polymer Systems Division
Phone: 801 972 3000

Wear Rings / Bearings Product Offering

Product Line

No matter what the application demands, Parker's diverse bearing product line ensures that performance requirements are met with maximized value. When pressure and temperature reach their extremes, WPT and WRT profiles help reduce the seal extrusion gap, assuring the utmost seal performance and leakage control. Conversely, in high volume, light-duty hydraulic cylinders, where pressure and temperature are not excessive, Parker's WN profile stands out as the most economical choice for long-lasting piston and rod bearings. When frictional forces must be kept to a minimum in pneumatic applications, PTFE bearing profiles PDT and PDW provide precision fitting and minimal frictional losses.

Profiles

Table 9-4: Product Profiles

Series	Description	Application (Duty)				Page
		Light	Medium	Heavy	Pneumatic	
WPT 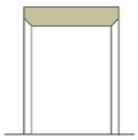	Tight-Tolerance Piston Wear Rings					9-7
WRT 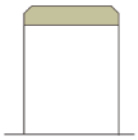	Tight-Tolerance Rod Wear Rings					9-11
WN 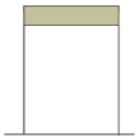	Commercial Wear Rings for Rod and Piston					9-14
PDT 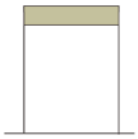	PTFE Wear Strip for Rod and Piston					9-18
PDW 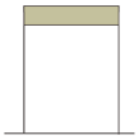	PTFE Machined Wear Rings for Rod and Piston					9-27

Parker Hannifin Corporation
Engineered Polymer Systems Division
Phone: 801 972 3000

Wear Ring / Bearing
WPT Profile

WPT Profile, Tight-Tolerance Piston Wear Ring

WPT tight-tolerance piston wear rings are the premier bearings for light- to heavy-duty hydraulic applications. WPTs are available in standard sizes from 1" up to 12" bore diameters (larger sizes upon request). WPT wear rings feature chamfered corners on the I.D. and are designed to snap closed during assembly to hold tight against the piston, eliminating bore interference and simplifying installation.

Technical Data

Standard Material
W4733 WearGard

Radial Tolerance
+.000"/ -.002" (up to 6" O.D.); +.000/-.003" (6" to 12" O.D.)

End Cuts
Butt Cut, Angle Cut, Step Cut

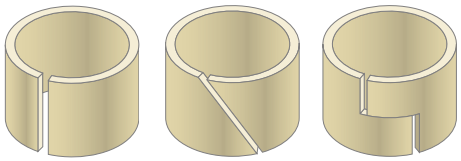

Butt Cut ***Angle Cut*** ***Step Cut***

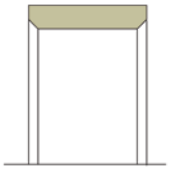

WPT Cross-Section

Options
Virtually any width can be produced without assessing a setup charge. Additionally, other cross-sections not shown are available when required.

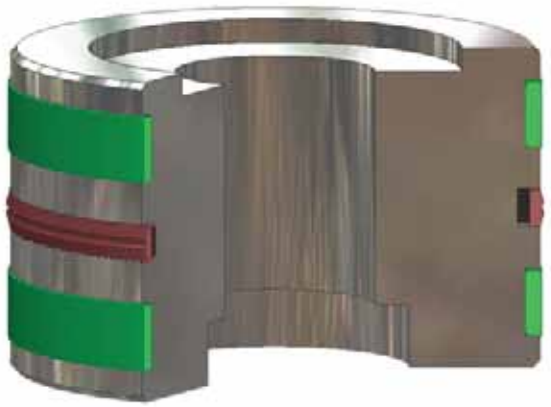

Piston sealing system comprised of WPT wear rings and BP bi-directional piston seal

Parker Hannifin Corporation
Engineered Polymer Systems Division
Phone: 801 972 3000

www.parkerseals.com

Part Number Nomenclature — WPT Profile

Table 9-5. WPT Profile

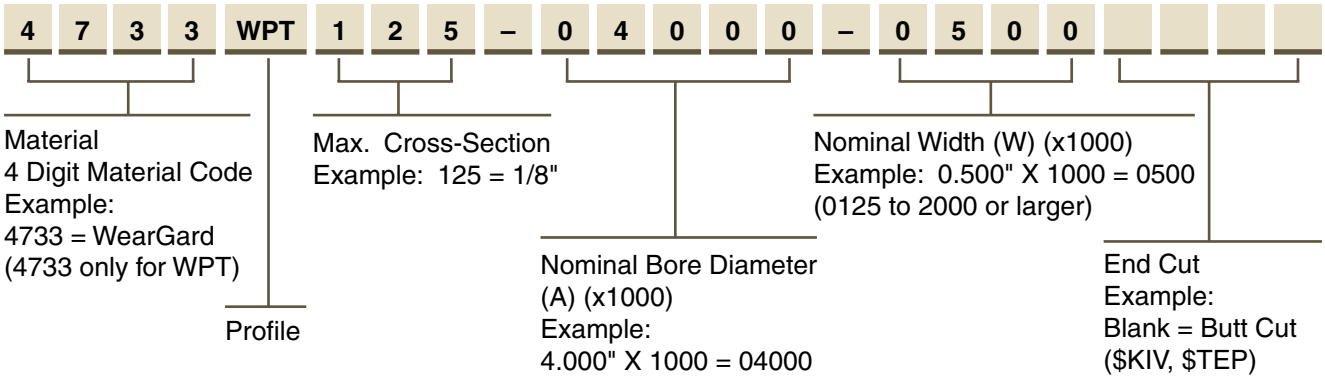

Gland Dimensions — WPT Profile

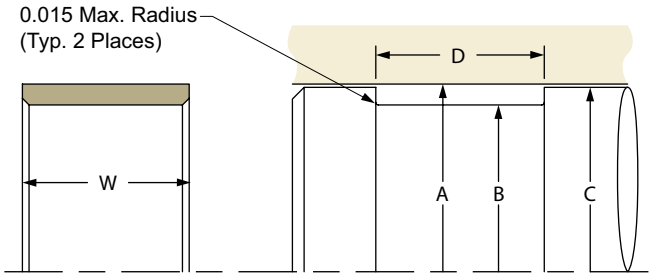

Please refer to Engineering Section 2, page 2-8 for surface finish and additional hardware considerations.

Table 9-6. WPT Gland Dimensions — Inch

A Bore Diameter	B Groove Diameter	C Piston Diameter	D Groove Width	Part Number
+.002/-.000	+.000/-.002	+.000/-.002	+.010/-.000	
1.000	0.875	0.983	D = W + 0.010"	**4733WPT062-01000-XXXX**
1.125	1.000	1.108	D = W + 0.010"	**4733WPT062-01125-XXXX**
1.250	1.125	1.233	D = W + 0.010"	**4733WPT062-01250-XXXX**
1.375	1.250	1.358	D = W + 0.010"	**4733WPT062-01375-XXXX**
1.500	1.375	1.483	D = W + 0.010"	**4733WPT062-01500-XXXX**
1.625	1.500	1.608	D = W + 0.010"	**4733WPT062-01625-XXXX**
1.750	1.625	1.733	D = W + 0.010"	**4733WPT062-01750-XXXX**
1.875	1.750	1.858	D = W + 0.010"	**4733WPT062-01875-XXXX**
2.375	2.250	2.358	D = W + 0.010"	**4733WPT062-02375-XXXX**
2.625	2.500	2.608	D = W + 0.010"	**4733WPT062-02625-XXXX**
+.002/-.000	+.000/-.002	+.000/-.002	+.010/-.000	
1.000	0.749	0.983	D = W + 0.010"	**4733WPT125-01000-XXXX**
1.125	0.874	1.108	D = W + 0.010"	**4733WPT125-01125-XXXX**
1.250	0.999	1.233	D = W + 0.010"	**4733WPT125-01250-XXXX**
1.375	1.124	1.358	D = W + 0.010"	**4733WPT125-01375-XXXX**
1.500	1.249	1.483	D = W + 0.010"	**4733WPT125-01500-XXXX**
1.625	1.374	1.608	D = W + 0.010"	**4733WPT125-01625-XXXX**
1.750	1.499	1.733	D = W + 0.010"	**4733WPT125-01750-XXXX**
1.875	1.624	1.858	D = W + 0.010"	**4733WPT125-01875-XXXX**

For custom groove calculations, see Appendix C.

09/01/07

Parker Hannifin Corporation
Engineered Polymer Systems Division
Phone: 801 972 3000

Table 9-6. WPT Gland Dimensions — Inch (Continued)

A Bore Diameter	B Groove Diameter	C Piston Diameter	D Groove Width	Part Number
+.002/-.000	+.000/-.002	+.000/-.002	+.010/-.000	
2.000	1.749	1.983	D = W + 0.010"	**4733WPT125-02000-XXXX**
2.125	1.874	2.108	D = W + 0.010"	**4733WPT125-02125-XXXX**
2.250	1.999	2.233	D = W + 0.010"	**4733WPT125-02250-XXXX**
2.375	2.124	2.358	D = W + 0.010"	**4733WPT125-02375-XXXX**
2.500	2.249	2.483	D = W + 0.010"	**4733WPT125-02500-XXXX**
2.625	2.374	2.608	D = W + 0.010"	**4733WPT125-02625-XXXX**
2.750	2.499	2.733	D = W + 0.010"	**4733WPT125-02750-XXXX**
2.875	2.624	2.858	D = W + 0.010"	**4733WPT125-02875-XXXX**
3.000	2.749	2.983	D = W + 0.010"	**4733WPT125-03000-XXXX**
3.125	2.874	3.108	D = W + 0.010"	**4733WPT125-03125-XXXX**
3.250	2.999	3.233	D = W + 0.010"	**4733WPT125-03250-XXXX**
3.375	3.124	3.358	D = W + 0.010"	**4733WPT125-03375-XXXX**
3.500	3.249	3.483	D = W + 0.010"	**4733WPT125-03500-XXXX**
3.625	3.374	3.608	D = W + 0.010"	**4733WPT125-03625-XXXX**
3.750	3.499	3.733	D = W + 0.010"	**4733WPT125-03750-XXXX**
3.875	3.624	3.858	D = W + 0.010"	**4733WPT125-03875-XXXX**
3.937	3.687	3.920	D = W + 0.010"	**4733WPT125-03937-XXXX**
4.000	3.749	3.983	D = W + 0.010"	**4733WPT125-04000-XXXX**
4.125	3.874	4.108	D = W + 0.010"	**4733WPT125-04125-XXXX**
4.250	3.999	4.233	D = W + 0.010"	**4733WPT125-04250-XXXX**
4.375	4.124	4.358	D = W + 0.010"	**4733WPT125-04375-XXXX**
4.500	4.249	4.483	D = W + 0.010"	**4733WPT125-04500-XXXX**
4.625	4.374	4.608	D = W + 0.010"	**4733WPT125-04625-XXXX**
4.750	4.499	4.733	D = W + 0.010"	**4733WPT125-04750-XXXX**
4.875	4.624	4.858	D = W + 0.010"	**4733WPT125-04875-XXXX**
+.004/-.000	+.000/-.003	+.000/-.003	+.010/-.000	
5.000	4.749	4.982	D = W + 0.010"	**4733WPT125-05000-XXXX**
5.125	4.874	5.107	D = W + 0.010"	**4733WPT125-05125-XXXX**
5.250	4.999	5.232	D = W + 0.010"	**4733WPT125-05250-XXXX**
5.375	5.124	5.357	D = W + 0.010"	**4733WPT125-05375-XXXX**
5.500	5.249	5.482	D = W + 0.010"	**4733WPT125-05500-XXXX**
5.625	5.374	5.607	D = W + 0.010"	**4733WPT125-05625-XXXX**
5.750	5.499	5.732	D = W + 0.010"	**4733WPT125-05750-XXXX**
6.000	5.749	5.980	D = W + 0.010"	**4733WPT125-06000-XXXX**
6.250	5.999	6.230	D = W + 0.010"	**4733WPT125-06250-XXXX**
6.500	6.249	6.480	D = W + 0.010"	**4733WPT125-06500-XXXX**
6.750	6.499	6.730	D = W + 0.010"	**4733WPT125-06750-XXXX**
7.000	6.749	6.980	D = W + 0.010"	**4733WPT125-07000-XXXX**
7.500	7.249	7.480	D = W + 0.010"	**4733WPT125-07500-XXXX**

For custom groove calculations, see Appendix C.

Parker Hannifin Corporation
Engineered Polymer Systems Division
Phone: 801 972 3000

Table 9-6. WPT Gland Dimensions Inch (Continued)

A Bore Diameter	B Groove Diameter	C Piston Diameter	D Groove Width	Part Number
+.006/-.000	**+.000/-.004**	**+.000/-.004**	**+.010/-.000**	
8.000	7.749	7.979	D = W + 0.010"	**4733WPT125-08000-XXXX**
8.500	8.249	8.479	D = W + 0.010"	**4733WPT125-08500-XXXX**
+.006/-.000	**+.000/-.004**	**+.000/-.004**	**+.010/-.000**	
9.000	8.749	8.979	D = W + 0.010"	**4733WPT125-09000-XXXX**
9.500	9.249	9.479	D = W + 0.010"	**4733WPT125-09500-XXXX**
10.000	9.749	9.979	D = W + 0.010"	**4733WPT125-10000-XXXX**
10.500	10.249	10.479	D = W + 0.010"	**4733WPT125-10500-XXXX**
+.006/-.000	**+.000/-.004**	**+.000/-.004**	**+.010/-.000**	
11.000	10.749	10.979	D = W + 0.010"	**4733WPT125-11000-XXXX**
11.500	11.249	11.479	D = W + 0.010"	**4733WPT125-11500-XXXX**
12.000	11.749	11.979	D = W + 0.010"	**4733WPT125-12000-XXXX**

For custom groove calculations, see Appendix C.

NOTE: For sizes larger than those shown in the table, please contact your local Parker Seal representative.

WPT Groove Calculation

See Piston Wear Ring Groove Calculation in Appendix C.

Parker Hannifin Corporation
Engineered Polymer Systems Division
Phone: 801 972 3000

Wear Ring / Bearing
WRT Profile

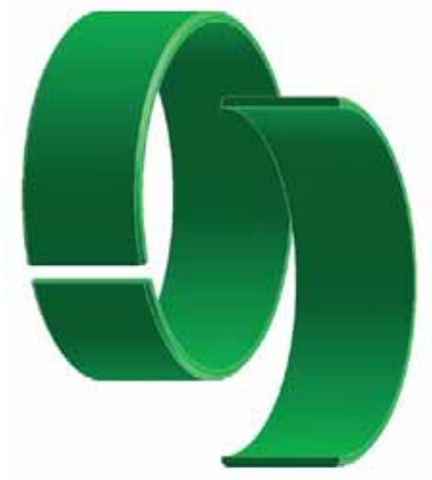

WRT Profile, Tight-Tolerance Rod Wear Ring

WRT tight-tolerance rod wear rings, when combined with the WPT profile, complete the premier cylinder bearing system. Recommended for light- to heavy-duty hydraulic applications, they are available in standard sizes from 7/8" up to 7" rod diameters (larger sizes upon request). WRTs feature chamfered corners on the O.D. and are designed to snap open during assembly to hold tight against the head gland, eliminating rod interference and simplifying installation.

Technical Data

Standard Material
W4733 WearGard

Radial Tolerance
+.000"/-.002" (up to 5-3/4" I.D.); +.000/-.003" (5-3/4" to 7" I.D.)

End Cuts
Butt Cut, Angle Cut, Step Cut

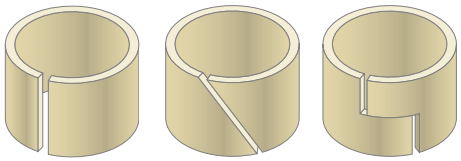

Butt Cut ***Angle Cut*** ***Step Cut***

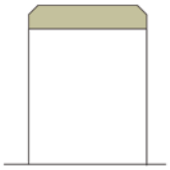

WRT Cross-Section

Options
Virtually any width can be produced without assessing a setup charge. Additionally, other cross-sections not shown are available when required.

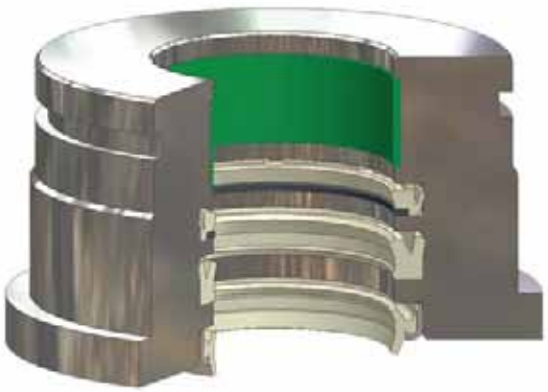

Rod sealing system comprised of WRT wear ring, BR buffer ring assembly, BT u-cup and AH canned wiper

Parker Hannifin Corporation
Engineered Polymer Systems Division
Phone: 801 972 3000

www.parkerseals.com

Part Number Nomenclature — WRT Profile

Table 9-7. WRT Profile

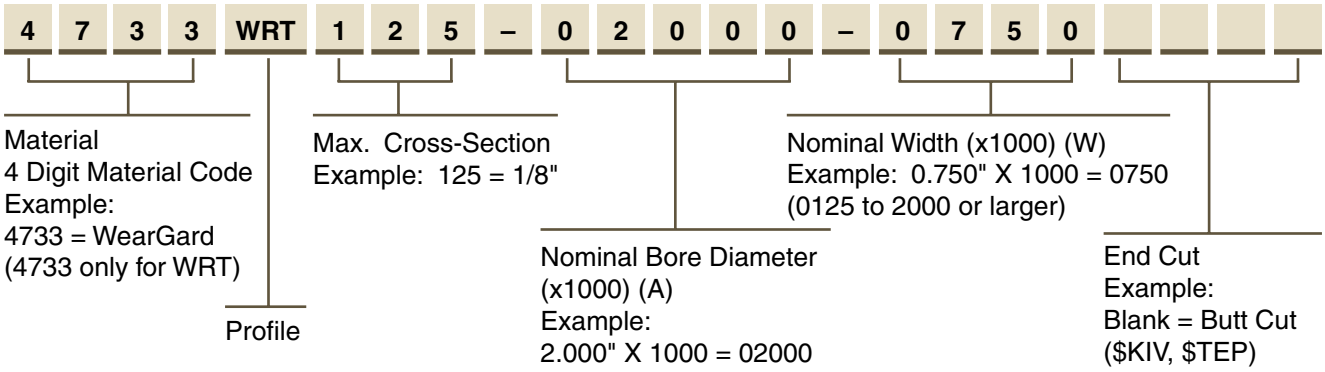

Gland Dimensions — WRT Profile

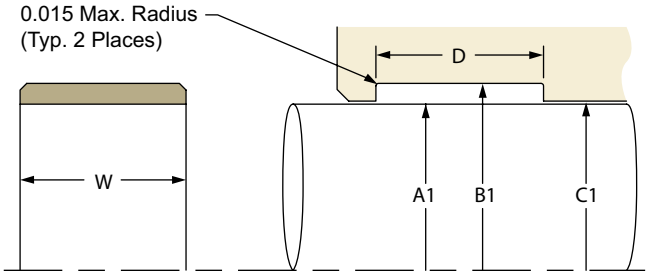

Please refer to Engineering Section 2, page 2-8 for surface finish and additional hardware considerations.

Table 9-8. WRT Gland Dimensions — Inch

A1 Rod Diameter	B1 Groove Diameter	C1 Throat Diameter	D Groove Width	Part Number
+.000/-.002	+.002/-.000	+.002/-.000	+.010/-.000	
0.875	1.000	0.892	D = W + 0.010"	**4733WRT062-00875-XXXX**
1.000	1.125	1.017	D = W + 0.010"	**4733WRT062-01000-XXXX**
1.125	1.250	1.142	D = W + 0.010"	**4733WRT062-01125-XXXX**
1.250	1.375	1.267	D = W + 0.010"	**4733WRT062-01250-XXXX**
1.375	1.500	1.392	D = W + 0.010"	**4733WRT062-01375-XXXX**
1.500	1.625	1.517	D = W + 0.010"	**4733WRT062-01500-XXXX**
1.625	1.750	1.642	D = W + 0.010"	**4733WRT062-01625-XXXX**
1.750	1.875	1.767	D = W + 0.010"	**4733WRT062-01750-XXXX**
2.250	2.375	2.267	D = W + 0.010"	**4733WRT062-02250-XXXX**
2.500	2.625	2.517	D = W + 0.010"	**4733WRT062-02250-XXXX**
+.000/-.002	+.002/-.000	+.002/-.000	+.010/-.000	
0.750	1.001	0.767	D = W + 0.010"	**4733WRT125-00750-XXXX**
0.875	1.126	0.892	D = W + 0.010"	**4733WRT125-00875-XXXX**
1.000	1.251	1.017	D = W + 0.010"	**4733WRT125-01000-XXXX**
1.125	1.376	1.142	D = W + 0.010"	**4733WRT125-01125-XXXX**
1.250	1.501	1.267	D = W + 0.010"	**4733WRT125-01250-XXXX**
1.375	1.626	1.392	D = W + 0.010"	**4733WRT125-01375-XXXX**
1.500	1.751	1.517	D = W + 0.010"	**4733WRT125-01500-XXXX**
1.625	1.876	1.642	D = W + 0.010"	**4733WRT125-01625-XXXX**
1.750	2.001	1.767	D = W + 0.010"	**4733WRT125-01750-XXXX**
1.875	2.126	1.892	D = W + 0.010"	**4733WRT125-01875-XXXX**

For custom groove calculations, see Appendix C.

09/01/07

Parker Hannifin Corporation
Engineered Polymer Systems Division
Phone: 801 972 3000

Table 9-8. WRT Gland Dimensions — Inch (Continued)

A1 Rod Diameter	B1 Groove Diameter	C1 Throat Diameter	D Groove Width	Part Number
+.000/-.002	+.002/-.000	+.002/-.000	+.010/-.000	
2.000	2.251	2.017	D = W + 0.010"	**4733WRT125-02000-XXXX**
2.125	2.376	2.142	D = W + 0.010"	**4733WRT125-02125-XXXX**
2.250	2.501	2.267	D = W + 0.010"	**4733WRT125-02250-XXXX**
2.375	2.626	2.392	D = W + 0.010"	**4733WRT125-02375-XXXX**
2.500	2.751	2.517	D = W + 0.010"	**4733WRT125-02500-XXXX**
2.625	2.876	2.642	D = W + 0.010"	**4733WRT125-02625-XXXX**
2.750	3.001	2.767	D = W + 0.010"	**4733WRT125-02750-XXXX**
2.875	3.126	2.892	D = W + 0.010"	**4733WRT125-02875-XXXX**
3.000	3.251	3.017	D = W + 0.010"	**4733WRT125-03000-XXXX**
3.125	3.376	3.142	D = W + 0.010"	**4733WRT125-03125-XXXX**
3.250	3.501	3.267	D = W + 0.010"	**4733WRT125-03250-XXXX**
3.375	3.626	3.392	D = W + 0.010"	**4733WRT125-03375-XXXX**
3.500	3.751	3.517	D = W + 0.010"	**4733WRT125-03500-XXXX**
3.625	3.876	3.642	D = W + 0.010"	**4733WRT125-03625-XXXX**
3.750	4.001	3.767	D = W + 0.010"	**4733WRT125-03750-XXXX**
3.875	4.126	3.892	D = W + 0.010"	**4733WRT125-03875-XXXX**
3.937	4.188	3.954	D = W + 0.010"	**4733WRT125-03937-XXXX**
4.000	4.251	4.017	D = W + 0.010"	**4733WRT125-04000-XXXX**
4.125	4.376	4.142	D = W + 0.010"	**4733WRT125-04125-XXXX**
4.250	4.501	4.267	D = W + 0.010"	**4733WRT125-04250-XXXX**
4.375	4.626	4.392	D = W + 0.010"	**4733WRT125-04375-XXXX**
4.500	4.751	4.517	D = W + 0.010"	**4733WRT125-04500-XXXX**
4.625	4.876	4.642	D = W + 0.010"	**4733WRT125-04625-XXXX**
4.750	5.001	4.767	D = W + 0.010"	**4733WRT125-04750-XXXX**
4.875	5.126	4.892	D = W + 0.010"	**4733WRT125-04875-XXXX**
5.000	5.251	5.017	D = W + 0.010"	**4733WRT125-05000-XXXX**
5.125	5.376	5.142	D = W + 0.010"	**4733WRT125-05125-XXXX**
5.250	5.501	5.267	D = W + 0.010"	**4733WRT125-05250-XXXX**
5.375	5.626	5.392	D = W + 0.010"	**4733WRT125-05375-XXXX**
5.500	5.751	5.517	D = W + 0.010"	**4733WRT125-05500-XXXX**
5.625	5.876	5.642	D = W + 0.010"	**4733WRT125-05625-XXXX**
+.000/-.004	+.003/-.000	+.003/-.000	+.010/-.000	
5.750	6.001	5.770	D = W + 0.010"	**4733WRT125-05750-XXXX**
6.000	6.251	6.020	D = W + 0.010"	**4733WRT125-06000-XXXX**
6.250	6.501	6.270	D = W + 0.010"	**4733WRT125-06250-XXXX**
6.500	6.751	6.520	D = W + 0.010"	**4733WRT125-06500-XXXX**
6.750	7.001	6.770	D = W + 0.010"	**4733WRT125-06750-XXXX**
7.000	7.251	7.020	D = W + 0.010"	**4733WRT125-07000-XXXX**

For custom groove calculations, see Appendix C.

NOTE: For sizes larger than those shown in the table, please contact your local Parker representative.

WRT Groove Calculation

See Rod Wear-Ring Groove Calculation in Appendix C.

Parker Hannifin Corporation
Engineered Polymer Systems Division
Phone: 801 972 3000

WN Profile, Commercial Wear Ring

WN commercial wear rings can be used for either pistons or rods and are the most economical bearing solution for light- to medium-duty hydraulic applications. MolyGard bearing material offers the combination of long life and high strength. WNs are available in standard sizes (1/8" cross-section) from 3/4" up to 11-3/4" rod diameters and 1" to 12" bore diameters (larger sizes upon request).

Technical Data

Standard Material
W4650 MolyGard

Radial Tolerance
+.000"/-.005"

End Cuts
Butt Cut only

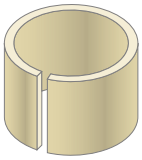

Butt Cut

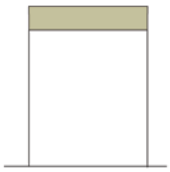

WN Cross-Section

Options
Virtually any width can be produced without assessing a setup charge. Additionally, other cross-sections not shown are available when required.

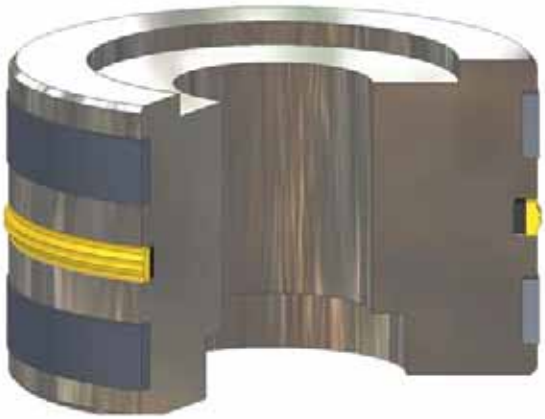

Piston sealing system comprised of WN wear rings and PSP bi-directional piston seal

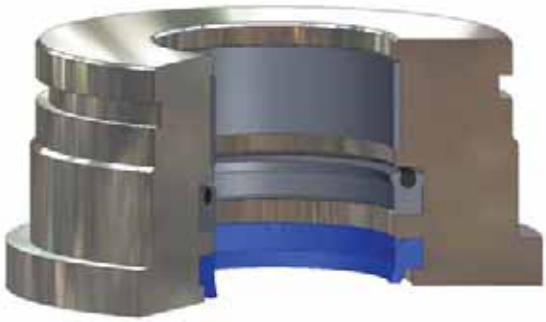

Rod sealing system comprised of WN wear ring, Type B PolyPak and SHD wiper

09/01/07

Parker Hannifin Corporation
Engineered Polymer Systems Division
Phone: 801 972 3000

Part Number Nomenclature — WN Profile

Table 9-9. WN Profile

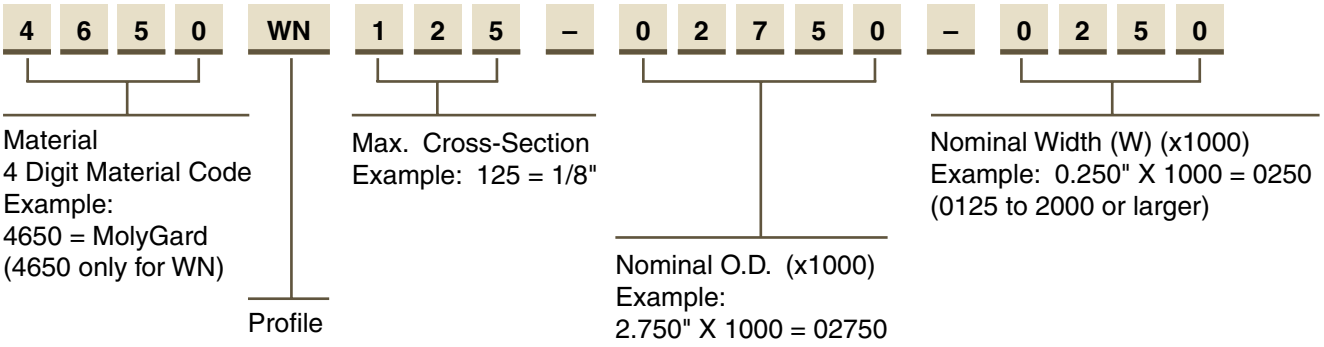

Gland Dimensions — WN Profile

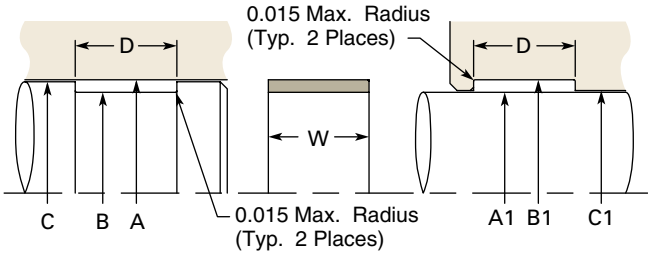

Please refer to Engineering Section 2, page 2-8 for surface finish and additional hardware considerations.

Table 9-10. WN Gland Dimensions — Inch

Piston			Rod			D Groove Width	Part Number
A Bore Diameter	B Groove Diameter	C Piston Diameter	A1 Rod Diameter	B1 Groove Diameter	C1 Throat Diameter		
+.002/-.000	+.000/-.002	+.000/-.002	+.000/-.002	+.002/-.000	+.002/-.000	+.010/-.000	
1.000	0.875	0.977	0.875	1.000	0.898	D = W + 0.010"	**4650WN062-01000-XXXX**
1.125	1.000	1.102	1.000	1.125	1.023	D = W + 0.010"	**4650WN062-01125-XXXX**
1.250	1.125	1.227	1.125	1.250	1.148	D = W + 0.010"	**4650WN062-01250-XXXX**
1.375	1.250	1.352	1.250	1.375	1.273	D = W + 0.010"	**4650WN062-01375-XXXX**
1.500	1.375	1.477	1.375	1.500	1.398	D = W + 0.010"	**4650WN062-01500-XXXX**
1.625	1.500	1.602	1.500	1.625	1.523	D = W + 0.010"	**4650WN062-01625-XXXX**
1.750	1.625	1.727	1.625	1.750	1.648	D = W + 0.010"	**4650WN062-01750-XXXX**
1.875	1.750	1.852	1.750	1.875	1.773	D = W + 0.010"	**4650WN062-01875-XXXX**
2.375	2.250	2.352	2.250	2.375	2.273	D = W + 0.010"	**4650WN062-02375-XXXX**
2.625	2.500	2.602	2.500	2.625	2.523	D = W + 0.010"	**4650WN062-02625-XXXX**
+.002/-.000	+.000/-.002	+.000/-.002	+.000/-.002	+.002/-.000	+.002/-.000	+.010/-.000	
1.000	0.749	0.977	0.750	1.001	0.773	D = W + 0.010"	**4650WN125-01000-XXXX**
1.125	0.874	1.102	0.875	1.126	0.898	D = W + 0.010"	**4650WN125-01125-XXXX**
1.250	0.999	1.227	1.000	1.251	1.023	D = W + 0.010"	**4650WN125-01250-XXXX**
1.375	1.124	1.352	1.125	1.376	1.148	D = W + 0.010"	**4650WN125-01375-XXXX**
1.500	1.249	1.477	1.250	1.501	1.273	D = W + 0.010"	**4650WN125-01500-XXXX**
1.625	1.374	1.602	1.375	1.626	1.398	D = W + 0.010"	**4650WN125-01625-XXXX**
1.750	1.499	1.727	1.500	1.751	1.523	D = W + 0.010"	**4650WN125-01750-XXXX**
1.875	1.624	1.852	1.625	1.876	1.648	D = W + 0.010"	**4650WN125-01875-XXXX**

For custom groove calculations, see Appendix C.

09/01/07

Parker Hannifin Corporation
Engineered Polymer Systems Division
Phone: 801 972 3000

Table 9-10. WN Gland Dimensions — Inch (Continued)

Piston			Rod			D Groove Width	Part Number
A Bore Diameter	B Groove Diameter	C Piston Diameter	A1 Rod Diameter	B1 Groove Diameter	C1 Throat Diameter		
+.002/-.000	+.000/-.002	+.000/-.002	+.000/-.002	+.002/-.000	+.002/-.000	+.010/-.000	
2.000	1.749	1.977	1.750	2.001	1.773	D = W + 0.010"	**4650WN125-02000-XXXX**
2.125	1.874	2.102	1.875	2.126	1.898	D = W + 0.010"	**4650WN125-02125-XXXX**
2.250	1.999	2.227	2.000	2.251	2.023	D = W + 0.010"	**4650WN125-02250-XXXX**
2.375	2.124	2.352	2.125	2.376	2.148	D = W + 0.010"	**4650WN125-02375-XXXX**
2.500	2.249	2.477	2.250	2.501	2.273	D = W + 0.010"	**4650WN125-02500-XXXX**
2.625	2.374	2.602	2.375	2.626	2.398	D = W + 0.010"	**4650WN125-02625-XXXX**
2.750	2.499	2.727	2.500	2.751	2.523	D = W + 0.010"	**4650WN125-02750-XXXX**
2.875	2.624	2.852	2.625	2.876	2.648	D = W + 0.010"	**4650WN125-02875-XXXX**
3.000	2.749	2.977	2.750	3.001	2.773	D = W + 0.010"	**4650WN125-03000-XXXX**
3.125	2.874	3.102	2.875	3.126	2.898	D = W + 0.010"	**4650WN125-03125-XXXX**
3.250	2.999	3.227	3.000	3.251	3.023	D = W + 0.010"	**4650WN125-03250-XXXX**
3.375	3.124	3.352	3.125	3.376	3.148	D = W + 0.010"	**4650WN125-03375-XXXX**
3.500	3.249	3.477	3.250	3.501	3.273	D = W + 0.010"	**4650WN125-03500-XXXX**
3.625	3.374	3.602	3.375	3.626	3.398	D = W + 0.010"	**4650WN125-03625-XXXX**
3.750	3.499	3.727	3.500	3.751	3.523	D = W + 0.010"	**4650WN125-03750-XXXX**
3.875	3.624	3.852	3.625	3.876	3.648	D = W + 0.010"	**4650WN125-03875-XXXX**
3.937	3.687	3.914	3.687	3.939	3.711	D = W + 0.010"	**4650WN125-03937-XXXX**
4.000	3.749	3.977	3.750	4.001	3.773	D = W + 0.010"	**4650WN125-04000-XXXX**
4.125	3.874	4.102	3.875	4.126	3.898	D = W + 0.010"	**4650WN125-04125-XXXX**
4.250	3.999	4.227	4.000	4.251	4.023	D = W + 0.010"	**4650WN125-04250-XXXX**
4.375	4.124	4.352	4.125	4.376	4.148	D = W + 0.010"	**4650WN125-04375-XXXX**
4.500	4.249	4.477	4.250	4.501	4.273	D = W + 0.010"	**4650WN125-04500-XXXX**
4.625	4.374	4.602	4.375	4.626	4.398	D = W + 0.010"	**4650WN125-04625-XXXX**
4.750	4.499	4.727	4.500	4.751	4.523	D = W + 0.010"	**4650WN125-04750-XXXX**
4.875	4.624	4.852	4.625	4.876	4.648	D = W + 0.010"	**4650WN125-04875-XXXX**
+.004/-.000	+.000/-.003	+.000/-.003	+.000/-.004	+.003/-.000	+.003/-.000	+.010/-.000	
5.000	4.749	4.976	4.750	5.001	4.774	D = W + 0.010"	**4650WN125-05000-XXXX**
5.125	4.874	5.101	4.875	5.126	4.899	D = W + 0.010"	**4650WN125-05125-XXXX**
5.250	4.999	5.226	5.000	5.251	5.024	D = W + 0.010"	**4650WN125-05250-XXXX**
5.375	5.124	5.351	5.125	5.376	5.149	D = W + 0.010"	**4650WN125-05375-XXXX**
5.500	5.249	5.476	5.250	5.501	5.274	D = W + 0.010"	**4650WN125-05500-XXXX**
5.625	5.374	5.601	5.375	5.626	5.399	D = W + 0.010"	**4650WN125-05625-XXXX**
5.750	5.499	5.726	5.500	5.751	5.524	D = W + 0.010"	**4650WN125-05750-XXXX**
6.000	5.749	5.976	5.750	6.001	5.774	D = W + 0.010"	**4650WN125-06000-XXXX**
6.250	5.999	6.226	6.000	6.251	6.024	D = W + 0.010"	**4650WN125-06250-XXXX**
6.375	6.124	6.351	6.125	6.376	6.149	D = W + 0.010"	**4650WN125-06375-XXXX**
6.500	6.249	6.476	6.250	6.501	6.274	D = W + 0.010"	**4650WN125-06500-XXXX**
6.750	6.499	6.726	6.500	6.751	6.524	D = W + 0.010"	**4650WN125-06750-XXXX**
6.875	6.624	6.851	6.625	6.876	6.649	D = W + 0.010"	**4650WN125-06875-XXXX**
7.000	6.749	6.976	6.750	7.001	6.774	D = W + 0.010"	**4650WN125-07000-XXXX**
7.250	6.999	7.226	7.000	7.251	7.024	D = W + 0.010"	**4650WN125-07250-XXXX**

For custom groove calculations, see Appendix C.

Parker Hannifin Corporation
Engineered Polymer Systems Division
Phone: 801 972 3000

Table 9-10. WN Gland Dimensions — Inch (Continued)

Piston			Rod			D Groove Width	Part Number
A Bore Diameter	B Groove Diameter	C Piston Diameter	A1 Rod Diameter	B1 Groove Diameter	C1 Throat Diameter		
+.004/-.000	**+.000/-.003**	**+.000/-.003**	**+.000/-.004**	**+.003/-.000**	**+.003/-.000**	**+.010/-.000**	
7.313	7.062	7.289	7.063	7.314	7.087	D = W + 0.010"	**4650WN125-07312-XXXX**
7.500	7.249	7.476	7.250	7.501	7.274	D = W + 0.010"	**4650WN125-07500-XXXX**
7.750	7.499	7.726	7.500	7.751	7.524	D = W + 0.010"	**4650WN125-07750-XXXX**
+.006/-.000	**+.000/-.004**	**+.000/-.004**	**+.000/-.006**	**+.004/-.000**	**+.004/-.000**	**+.010/-.000**	
8.000	7.749	7.975	7.750	8.001	7.775	D = W + 0.010"	**4650WN125-08000-XXXX**
8.250	7.999	8.225	8.000	8.251	8.025	D = W + 0.010"	**4650WN125-08250-XXXX**
8.500	8.249	8.475	8.250	8.501	8.275	D = W + 0.010"	**4650WN125-08500-XXXX**
8.750	8.499	8.725	8.500	8.751	8.525	D = W + 0.010"	**4650WN125-08750-XXXX**
9.000	8.749	8.975	8.750	9.001	8.775	D = W + 0.010"	**4650WN125-09000-XXXX**
9.250	8.999	9.225	9.000	9.251	9.025	D = W + 0.010"	**4650WN125-09250-XXXX**
9.500	9.249	9.475	9.250	9.501	9.275	D = W + 0.010"	**4650WN125-09500-XXXX**
10.000	9.749	9.975	9.750	10.001	9.775	D = W + 0.010"	**4650WN125-10000-XXXX**
10.500	10.249	10.475	10.250	10.501	10.275	D = W + 0.010"	**4650WN125-10500-XXXX**
10.625	10.374	10.600	10.375	10.626	10.400	D = W + 0.010"	**4650WN125-10625-XXXX**
11.000	10.749	10.975	10.750	11.001	10.775	D = W + 0.010"	**4650WN125-11000-XXXX**
11.500	11.249	11.475	11.250	11.501	11.275	D = W + 0.010"	**4650WN125-11500-XXXX**
12.000	11.749	11.975	11.750	12.001	11.775	D = W + 0.010"	**4650WN125-12000-XXXX**

For custom groove calculations, see Appendix C.

NOTE: For sizes larger than those shown in the table, please contact your local Parker Seal representative.

WN Groove Calculation

See Piston and Rod Wear Ring Groove Calculations in Appendix C.

Parker Hannifin Corporation
Engineered Polymer Systems Division
Phone: 801 972 3000

Wear Ring / Bearing
PDT Profile

PDT Profile, PTFE Wear Strip for Rod and Piston

PDT wear strip is available in a variety of PTFE blends and provides excellent low-friction performance in pneumatics and light-duty hydraulics. PDTs are available in cut-to-length versions as well as bulk strip. Cut-to-length part numbers reduce prep time by providing precision end cuts and ready-to-install diameters. Bulk strip PDTs offer versatility and reduce part number inventory by providing universal sizing in one part number.

Technical Data

Standard Material
0401 – 40% Bronze-Filled PTFE
0307 – 23% Carbon, 2% Graphite-Filled PTFE
Others available upon request

Radial Tolerance
+.000"/-.004"

End Cuts
Butt Cut, Angle Cut, Step Cut

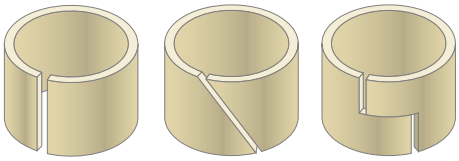

Butt Cut *Angle Cut* *Step Cut*

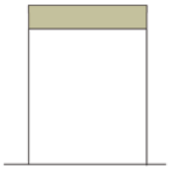

PDT Cross-Section

Options
Virtually any width, diameter and cross-section can be produced without assessing a setup charge.

Piston sealing system comprised of PDT wear strip and B7 piston u-cups

Rod sealing system comprised of PDT wear strip, B3 rod u-cup and SH959 wiper

09/01/07

Parker Hannifin Corporation
Engineered Polymer Systems Division
Phone: 801 972 3000

Part Number Nomenclature — PDT Profile

Table 9-11. PDT Profile — Cut-to-Length

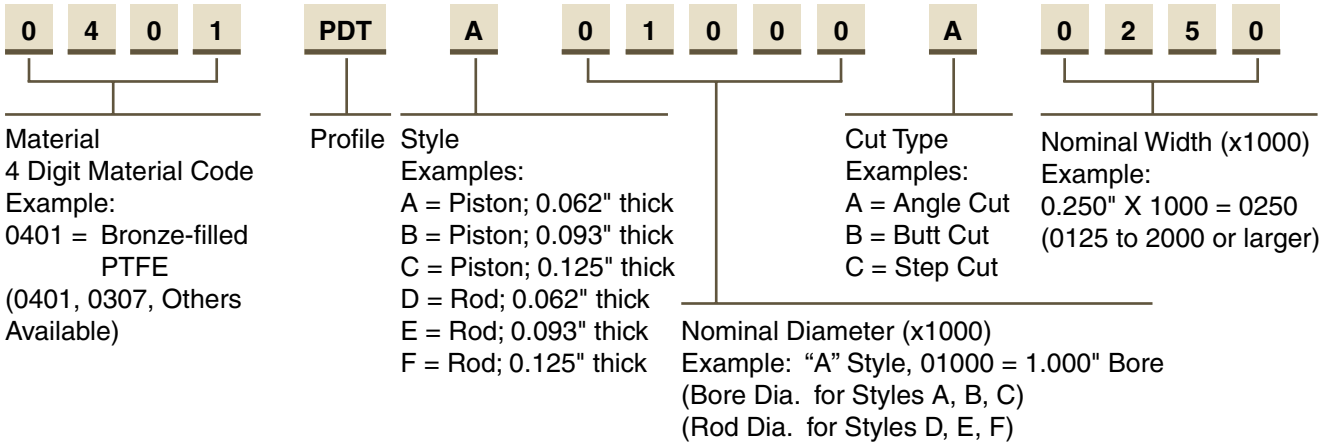

Table 9-12. PDT Profile — Bulk Strip

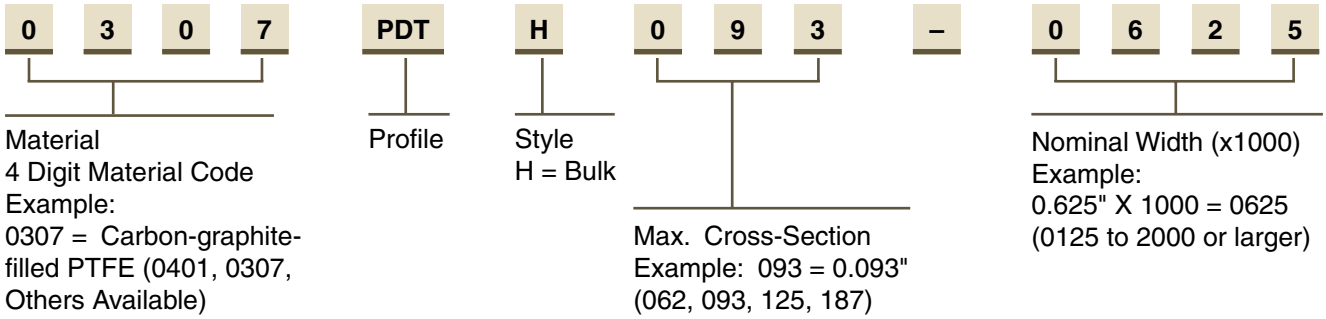

Gland Dimensions — PDT Profile, Piston (Cut-To-Length)

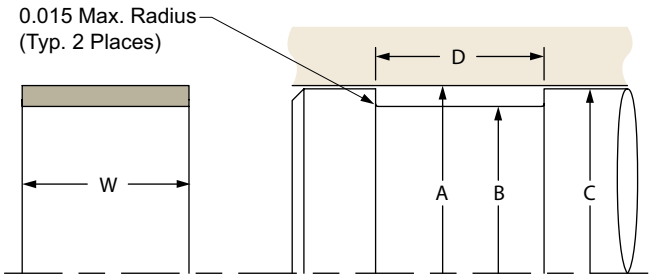

Please refer to Engineering Section 2, page 2-8 for surface finish and additional hardware considerations.

Table 9-13. PDT Gland Dimensions (Piston, Cut-To-Length) — Inch

A Bore Diameter	B Groove Diameter	C Piston Diameter	D Groove Width	Part Number
+.002/-.000	+.000/-.002	+.000/-.002	+.010/-.000	PDTA
1.000	0.875	0.979	D = W + 0.010"	XXXX PDTA 01000 X XXXX
1.062	0.937	1.041	D = W + 0.010"	XXXX PDTA 01062 X XXXX
1.125	1.000	1.104	D = W + 0.010"	XXXX PDTA 01125 X XXXX
1.187	1.062	1.166	D = W + 0.010"	XXXX PDTA 01187 X XXXX
1.250	1.125	1.229	D = W + 0.010"	XXXX PDTA 01250 X XXXX

For custom groove calculations, see Appendix C.

Parker Hannifin Corporation
Engineered Polymer Systems Division
Phone: 801 972 3000

Table 9-13. PDT Gland Dimensions (Piston, Cut-To-Length) — Inch (Continued)

A Bore Diameter	B Groove Diameter	C Piston Diameter	D Groove Width	Part Number
+.002/-.000	+.000/-.002	+.000/-.002	+.010/-.000	PDTA
1.312	1.187	1.291	D = W + 0.010"	XXXX PDTA 01312 X XXXX
1.375	1.250	1.354	D = W + 0.010"	XXXX PDTA 01375 X XXXX
1.437	1.312	1.416	D = W + 0.010"	XXXX PDTA 01437 X XXXX
1.500	1.375	1.479	D = W + 0.010"	XXXX PDTA 01500 X XXXX
1.562	1.437	1.541	D = W + 0.010"	XXXX PDTA 01562 X XXXX
1.625	1.500	1.604	D = W + 0.010"	XXXX PDTA 01625 X XXXX
1.687	1.562	1.666	D = W + 0.010"	XXXX PDTA 01687 X XXXX
1.750	1.625	1.729	D = W + 0.010"	XXXX PDTA 01750 X XXXX
1.875	1.750	1.854	D = W + 0.010"	XXXX PDTA 01875 X XXXX
2.000	1.875	1.979	D = W + 0.010"	XXXX PDTA 02000 X XXXX
+.002/-.000	+.000/-.002	+.000/-.002	+.010/-.000	PDTB
1.500	1.313	1.479	D = W + 0.010"	XXXX PDTB 01500 X XXXX
1.562	1.375	1.541	D = W + 0.010"	XXXX PDTB 01562 X XXXX
1.625	1.438	1.604	D = W + 0.010"	XXXX PDTB 01625 X XXXX
1.687	1.500	1.666	D = W + 0.010"	XXXX PDTB 01687 X XXXX
1.750	1.563	1.729	D = W + 0.010"	XXXX PDTB 01750 X XXXX
1.875	1.688	1.854	D = W + 0.010"	XXXX PDTB 01875 X XXXX
2.000	1.813	1.979	D = W + 0.010"	XXXX PDTB 02000 X XXXX
2.125	1.938	2.104	D = W + 0.010"	XXXX PDTB 02125 X XXXX
2.250	2.063	2.229	D = W + 0.010"	XXXX PDTB 02250 X XXXX
2.375	2.188	2.354	D = W + 0.010"	XXXX PDTB 02375 X XXXX
2.500	2.313	2.479	D = W + 0.010"	XXXX PDTB 02500 X XXXX
2.625	2.438	2.604	D = W + 0.010"	XXXX PDTB 02625 X XXXX
2.750	2.563	2.729	D = W + 0.010"	XXXX PDTB 02750 X XXXX
2.875	2.688	2.854	D = W + 0.010"	XXXX PDTB 02875 X XXXX
3.000	2.813	2.979	D = W + 0.010"	XXXX PDTB 03000 X XXXX
3.125	2.938	3.104	D = W + 0.010"	XXXX PDTB 03125 X XXXX
3.250	3.063	3.229	D = W + 0.010"	XXXX PDTB 03250 X XXXX
3.375	3.188	3.354	D = W + 0.010"	XXXX PDTB 03375 X XXXX
3.500	3.313	3.479	D = W + 0.010"	XXXX PDTB 03500 X XXXX
3.625	3.438	3.604	D = W + 0.010"	XXXX PDTB 03625 X XXXX
3.750	3.563	3.729	D = W + 0.010"	XXXX PDTB 03750 X XXXX
3.875	3.688	3.854	D = W + 0.010"	XXXX PDTB 03875 X XXXX
4.000	3.813	3.979	D = W + 0.010"	XXXX PDTB 04000 X XXXX
4.125	3.938	4.104	D = W + 0.010"	XXXX PDTB 04125 X XXXX
4.250	4.063	4.229	D = W + 0.010"	XXXX PDTB 04250 X XXXX
4.375	4.188	4.354	D = W + 0.010"	XXXX PDTB 04375 X XXXX
4.500	4.313	4.479	D = W + 0.010"	XXXX PDTB 04500 X XXXX
4.625	4.438	4.604	D = W + 0.010"	XXXX PDTB 04625 X XXXX
4.750	4.563	4.729	D = W + 0.010"	XXXX PDTB 04750 X XXXX
4.875	4.688	4.854	D = W + 0.010"	XXXX PDTB 04875 X XXXX
+.004/-.000	+.000/-.003	+.000/-.003	+.010/-.000	PDTB
5.000	4.813	4.978	D = W + 0.010"	XXXX PDTB 05000 X XXXX
5.125	4.938	5.103	D = W + 0.010"	XXXX PDTB 05125 X XXXX

For custom groove calculations, see Appendix C.

09/01/07

Parker Hannifin Corporation
Engineered Polymer Systems Division
Phone: 801 972 3000

Table 9-13. PDT Gland Dimensions (Piston, Cut-To-Length) — Inch (Continued)

A Bore Diameter	B Groove Diameter	C Piston Diameter	D Groove Width	Part Number
+.004/-.000	+.000/-.003	+.000/-.003	+.010/-.000	PDTB
5.250	5.063	5.228	D = W + 0.010"	XXXX PDTB 05250 X XXXX
5.375	5.188	5.353	D = W + 0.010"	XXXX PDTB 05375 X XXXX
5.500	5.313	5.478	D = W + 0.010"	XXXX PDTB 05500 X XXXX
5.625	5.438	5.603	D = W + 0.010"	XXXX PDTB 05625 X XXXX
5.750	5.563	5.728	D = W + 0.010"	XXXX PDTB 05750 X XXXX
5.875	5.688	5.853	D = W + 0.010"	XXXX PDTB 05875 X XXXX
6.000	5.813	5.978	D = W + 0.010"	XXXX PDTB 06000 X XXXX
6.125	5.938	6.103	D = W + 0.010"	XXXX PDTB 06125 X XXXX
6.250	6.063	6.228	D = W + 0.010"	XXXX PDTB 06250 X XXXX
6.375	6.188	6.353	D = W + 0.010"	XXXX PDTB 06375 X XXXX
6.500	6.313	6.478	D = W + 0.010"	XXXX PDTB 06500 X XXXX
6.750	6.563	6.728	D = W + 0.010"	XXXX PDTB 06750 X XXXX
7.000	6.813	6.978	D = W + 0.010"	XXXX PDTB 07000 X XXXX
7.250	7.063	7.228	D = W + 0.010"	XXXX PDTB 07250 X XXXX
7.500	7.313	7.478	D = W + 0.010"	XXXX PDTB 07500 X XXXX
7.750	7.563	7.728	D = W + 0.010"	XXXX PDTB 07750 X XXXX
+.006/-.000	+.000/-.004	+.000/-.004	+.010/-.000	PDTB
8.000	7.813	7.977	D = W + 0.010"	XXXX PDTB 08000 X XXXX
8.250	8.063	8.227	D = W + 0.010"	XXXX PDTB 08250 X XXXX
8.500	8.313	8.477	D = W + 0.010"	XXXX PDTB 08500 X XXXX
9.000	8.813	8.977	D = W + 0.010"	XXXX PDTB 09000 X XXXX
9.500	9.313	9.477	D = W + 0.010"	XXXX PDTB 09500 X XXXX
10.000	9.813	9.977	D = W + 0.010"	XXXX PDTB 10000 X XXXX
+.002/-.000	+.000/-.002	+.000/-.002	+.010/-.000	PDTC
2.000	1.749	1.979	D = W + 0.010"	XXXX PDTC 02000 X XXXX
2.125	1.874	2.104	D = W + 0.010"	XXXX PDTC 02125 X XXXX
2.250	1.999	2.229	D = W + 0.010"	XXXX PDTC 02250 X XXXX
2.375	2.124	2.354	D = W + 0.010"	XXXX PDTC 02375 X XXXX
2.500	2.249	2.479	D = W + 0.010"	XXXX PDTC 02500 X XXXX
2.625	2.374	2.604	D = W + 0.010"	XXXX PDTC 02625 X XXXX
2.750	2.499	2.729	D = W + 0.010"	XXXX PDTC 02750 X XXXX
2.875	2.624	2.854	D = W + 0.010"	XXXX PDTC 02875 X XXXX
3.000	2.749	2.979	D = W + 0.010"	XXXX PDTC 03000 X XXXX
3.125	2.874	3.104	D = W + 0.010"	XXXX PDTC 03125 X XXXX
3.250	2.999	3.229	D = W + 0.010"	XXXX PDTC 03250 X XXXX
3.375	3.124	3.354	D = W + 0.010"	XXXX PDTC 03375 X XXXX
3.500	3.249	3.479	D = W + 0.010"	XXXX PDTC 03500 X XXXX
3.625	3.374	3.604	D = W + 0.010"	XXXX PDTC 03625 X XXXX
3.750	3.499	3.729	D = W + 0.010"	XXXX PDTC 03750 X XXXX
3.875	3.624	3.854	D = W + 0.010"	XXXX PDTC 03875 X XXXX
4.000	3.749	3.979	D = W + 0.010"	XXXX PDTC 04000 X XXXX
4.125	3.874	4.104	D = W + 0.010"	XXXX PDTC 04125 X XXXX
4.250	3.999	4.229	D = W + 0.010"	XXXX PDTC 04250 X XXXX
4.375	4.124	4.354	D = W + 0.010"	XXXX PDTC 04375 X XXXX

For custom groove calculations, see Appendix C.

09/01/07

Parker Hannifin Corporation
Engineered Polymer Systems Division
Phone: 801 972 3000

Table 9-13. PDT Gland Dimensions (Piston, Cut-To-Length) — Inch (Continued)

A Bore Diameter	B Groove Diameter	C Piston Diameter	D Groove Width	Part Number
+.002/-.000	+.000/-.002	+.000/-.002	+.010/-.000	PDTC
4.500	4.249	4.479	D = W + 0.010"	XXXX PDTC 04500 X XXXX
4.625	4.374	4.604	D = W + 0.010"	XXXX PDTC 04625 X XXXX
4.750	4.499	4.729	D = W + 0.010"	XXXX PDTC 04750 X XXXX
4.875	4.624	4.854	D = W + 0.010"	XXXX PDTC 04875 X XXXX
+.004/-.000	+.000/-.003	+.000/-.003	+.010/-.000	PDTC
5.000	4.749	4.978	D = W + 0.010"	XXXX PDTC 05000 X XXXX
5.125	4.874	5.103	D = W + 0.010"	XXXX PDTC 05125 X XXXX
5.250	4.999	5.228	D = W + 0.010"	XXXX PDTC 05250 X XXXX
5.375	5.124	5.353	D = W + 0.010"	XXXX PDTC 05375 X XXXX
5.500	5.249	5.478	D = W + 0.010"	XXXX PDTC 05500 X XXXX
5.625	5.374	5.603	D = W + 0.010"	XXXX PDTC 05625 X XXXX
5.750	5.499	5.728	D = W + 0.010"	XXXX PDTC 05750 X XXXX
5.875	5.624	5.853	D = W + 0.010"	XXXX PDTC 05875 X XXXX
6.000	5.749	5.978	D = W + 0.010"	XXXX PDTC 06000 X XXXX
6.125	5.874	6.103	D = W + 0.010"	XXXX PDTC 06125 X XXXX
6.250	5.999	6.228	D = W + 0.010"	XXXX PDTC 06250 X XXXX
6.375	6.124	6.353	D = W + 0.010"	XXXX PDTC 06375 X XXXX
6.500	6.249	6.478	D = W + 0.010"	XXXX PDTC 06500 X XXXX
6.750	6.499	6.728	D = W + 0.010"	XXXX PDTC 06750 X XXXX
7.000	6.749	6.978	D = W + 0.010"	XXXX PDTC 07000 X XXXX
7.250	6.999	7.228	D = W + 0.010"	XXXX PDTC 07250 X XXXX
7.500	7.249	7.478	D = W + 0.010"	XXXX PDTC 07500 X XXXX
7.750	7.499	7.728	D = W + 0.010"	XXXX PDTC 07750 X XXXX
+.006/-.000	+.000/-.004	+.000/-.004	+.010/-.000	PDTC
8.000	7.749	7.977	D = W + 0.010"	XXXX PDTC 08000 X XXXX
8.250	7.999	8.227	D = W + 0.010"	XXXX PDTC 08250 X XXXX
8.500	8.249	8.477	D = W + 0.010"	XXXX PDTC 08500 X XXXX
9.000	8.749	8.977	D = W + 0.010"	XXXX PDTC 09000 X XXXX
9.500	9.249	9.477	D = W + 0.010"	XXXX PDTC 09500 X XXXX
10.000	9.749	9.977	D = W + 0.010"	XXXX PDTC 10000 X XXXX
10.500	10.249	10.477	D = W + 0.010"	XXXX PDTC 10500 X XXXX
11.000	10.749	10.977	D = W + 0.010"	XXXX PDTC 11000 X XXXX
11.500	11.249	11.477	D = W + 0.010"	XXXX PDTC 11500 X XXXX
12.000	11.749	11.977	D = W + 0.010"	XXXX PDTC 12000 X XXXX
12.500	12.249	12.477	D = W + 0.010"	XXXX PDTC 12500 X XXXX
13.000	12.749	12.977	D = W + 0.010"	XXXX PDTC 13000 X XXXX
13.500	13.249	13.477	D = W + 0.010"	XXXX PDTC 13500 X XXXX
14.000	13.749	13.977	D = W + 0.010"	XXXX PDTC 14000 X XXXX
14.500	14.249	14.477	D = W + 0.010"	XXXX PDTC 14500 X XXXX
15.000	14.749	14.977	D = W + 0.010"	XXXX PDTC 15000 X XXXX
15.500	15.249	15.477	D = W + 0.010"	XXXX PDTC 15500 X XXXX
16.000	15.749	15.977	D = W + 0.010"	XXXX PDTC 16000 X XXXX

For custom groove calculations, see Appendix C.

NOTE: For sizes larger than those shown in the table, please contact your local Parker Seal representative.

Parker Hannifin Corporation
Engineered Polymer Systems Division
Phone: 801 972 3000

PDT Groove Calculation

See Piston and Rod Wear Ring Groove Calculations in Appendix C.

Gland Dimensions — PDT Profile, Rod (Cut-To-Length)

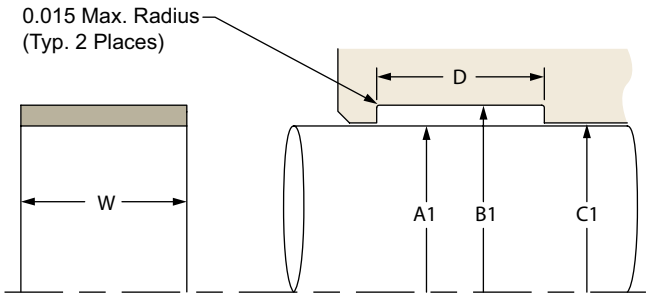

Please refer to Engineering Section 2, page 2-8 for surface finish and additional hardware considerations.

Table 9-14. PDT Gland Dimensions (Rod, Cut-To-Length) — Inch

A1 Rod Diameter	B1 Groove Diameter	C1 Piston Diameter	D Groove Width	Part Number
+.000/-.002	+.002/-.000	+.002/-.000	+.010/-.000	PDTD
0.875	1.000	0.896	D = W + 0.010"	XXXX PDTD 00875 X XXXX
0.937	1.062	0.958	D = W + 0.010"	XXXX PDTD 00937 X XXXX
1.000	1.125	1.021	D = W + 0.010"	XXXX PDTD 01000 X XXXX
1.062	1.187	1.083	D = W + 0.010"	XXXX PDTD 01062 X XXXX
1.125	1.250	1.146	D = W + 0.010"	XXXX PDTD 01125 X XXXX
1.187	1.312	1.208	D = W + 0.010"	XXXX PDTD 01187 X XXXX
1.250	1.375	1.271	D = W + 0.010"	XXXX PDTD 01250 X XXXX
1.312	1.437	1.333	D = W + 0.010"	XXXX PDTD 01312 X XXXX
1.375	1.500	1.396	D = W + 0.010"	XXXX PDTD 01375 X XXXX
1.437	1.562	1.458	D = W + 0.010"	XXXX PDTD 01437 X XXXX
1.500	1.625	1.521	D = W + 0.010"	XXXX PDTD 01500 X XXXX
1.625	1.750	1.646	D = W + 0.010"	XXXX PDTD 01625 X XXXX
1.750	1.875	1.771	D = W + 0.010"	XXXX PDTD 01750 X XXXX
1.875	2.000	1.896	D = W + 0.010"	XXXX PDTD 01875 X XXXX
2.000	2.125	2.021	D = W + 0.010"	XXXX PDTD 02000 X XXXX
+.000/-.002	+.002/-.000	+.002/-.000	+.010/-.000	PDTE
1.500	1.687	1.521	D = W + 0.010"	XXXX PDTE 01500 X XXXX
1.625	1.812	1.646	D = W + 0.010"	XXXX PDTE 01625 X XXXX
1.750	1.937	1.771	D = W + 0.010"	XXXX PDTE 01750 X XXXX
1.875	2.062	1.896	D = W + 0.010"	XXXX PDTE 01875 X XXXX
2.000	2.187	2.021	D = W + 0.010"	XXXX PDTE 02000 X XXXX
2.125	2.312	2.146	D = W + 0.010"	XXXX PDTE 02125 X XXXX
2.250	2.437	2.271	D = W + 0.010"	XXXX PDTE 02250 X XXXX
2.375	2.562	2.396	D = W + 0.010"	XXXX PDTE 02375 X XXXX
2.500	2.687	2.521	D = W + 0.010"	XXXX PDTE 02500 X XXXX
2.625	2.812	2.646	D = W + 0.010"	XXXX PDTE 02625 X XXXX
2.750	2.937	2.771	D = W + 0.010"	XXXX PDTE 02750 X XXXX
2.875	3.062	2.896	D = W + 0.010"	XXXX PDTE 02875 X XXXX
3.000	3.187	3.021	D = W + 0.010"	XXXX PDTE 03000 X XXXX

For custom groove calculations, see Appendix C.

09/01/07

Parker Hannifin Corporation
Engineered Polymer Systems Division
Phone: 801 972 3000

Table 9-14. PDT Gland Dimensions (Rod, Cut-To-Length) — Inch (Continued)

A1 Rod Diameter	B1 Groove Diameter	C1 Piston Diameter	D Groove Width	Part Number
+.000/-.002	+.002/-.000	+.002/-.000	+.010/-.000	PDTE
3.125	3.312	3.146	D = W + 0.010"	XXXX PDTE 03125 X XXXX
3.250	3.437	3.271	D = W + 0.010"	XXXX PDTE 03250 X XXXX
3.375	3.562	3.396	D = W + 0.010"	XXXX PDTE 03375 X XXXX
3.500	3.687	3.521	D = W + 0.010"	XXXX PDTE 03500 X XXXX
3.625	3.812	3.646	D = W + 0.010"	XXXX PDTE 03625 X XXXX
3.750	3.937	3.771	D = W + 0.010"	XXXX PDTE 03750 X XXXX
3.875	4.062	3.896	D = W + 0.010"	XXXX PDTE 03875 X XXXX
4.000	4.187	4.021	D = W + 0.010"	XXXX PDTE 04000 X XXXX
4.125	4.312	4.146	D = W + 0.010"	XXXX PDTE 04125 X XXXX
4.250	4.437	4.271	D = W + 0.010"	XXXX PDTE 04250 X XXXX
4.375	4.562	4.396	D = W + 0.010"	XXXX PDTE 04375 X XXXX
4.500	4.687	4.521	D = W + 0.010"	XXXX PDTE 04500 X XXXX
4.625	4.812	4.646	D = W + 0.010"	XXXX PDTE 04625 X XXXX
4.750	4.937	4.771	D = W + 0.010"	XXXX PDTE 04750 X XXXX
4.875	5.062	4.896	D = W + 0.010"	XXXX PDTE 04875 X XXXX
5.000	5.187	5.021	D = W + 0.010"	XXXX PDTE 05000 X XXXX
+.000/-.002	+.002/-.000	+.002/-.000	+.010/-.000	PDTF
1.500	1.751	1.521	D = W + 0.010"	XXXX PDTF 01500 X XXXX
1.625	1.876	1.646	D = W + 0.010"	XXXX PDTF 01625 X XXXX
1.750	2.001	1.771	D = W + 0.010"	XXXX PDTF 01750 X XXXX
1.875	2.126	1.896	D = W + 0.010"	XXXX PDTF 01875 X XXXX
2.000	2.251	2.021	D = W + 0.010"	XXXX PDTF 02000 X XXXX
2.125	2.376	2.146	D = W + 0.010"	XXXX PDTF 02125 X XXXX
2.250	2.501	2.271	D = W + 0.010"	XXXX PDTF 02250 X XXXX
2.375	2.626	2.396	D = W + 0.010"	XXXX PDTF 02375 X XXXX
2.500	2.751	2.521	D = W + 0.010"	XXXX PDTF 02500 X XXXX
2.625	2.876	2.646	D = W + 0.010"	XXXX PDTF 02625 X XXXX
2.750	3.001	2.771	D = W + 0.010"	XXXX PDTF 02750 X XXXX
2.875	3.126	2.896	D = W + 0.010"	XXXX PDTF 02875 X XXXX
3.000	3.251	3.021	D = W + 0.010"	XXXX PDTF 03000 X XXXX
3.125	3.376	3.146	D = W + 0.010"	XXXX PDTF 03125 X XXXX
+.000/-.002	+.002/-.000	+.002/-.000	+.010/-.000	PDTF
3.250	3.501	3.271	D = W + 0.010"	XXXX PDTF 03250 X XXXX
3.375	3.626	3.396	D = W + 0.010"	XXXX PDTF 03375 X XXXX
3.500	3.751	3.521	D = W + 0.010"	XXXX PDTF 03500 X XXXX
3.625	3.876	3.646	D = W + 0.010"	XXXX PDTF 03625 X XXXX
3.750	4.001	3.771	D = W + 0.010"	XXXX PDTF 03750 X XXXX
3.875	4.126	3.896	D = W + 0.010"	XXXX PDTF 03875 X XXXX
4.000	4.251	4.021	D = W + 0.010"	XXXX PDTF 04000 X XXXX
4.125	4.376	4.146	D = W + 0.010"	XXXX PDTF 04125 X XXXX
4.250	4.501	4.271	D = W + 0.010"	XXXX PDTF 04250 X XXXX
4.375	4.626	4.396	D = W + 0.010"	XXXX PDTF 04375 X XXXX
4.500	4.751	4.521	D = W + 0.010"	XXXX PDTF 04500 X XXXX
4.625	4.876	4.646	D = W + 0.010"	XXXX PDTF 04625 X XXXX

For custom groove calculations, see Appendix C.

09/01/07

Parker Hannifin Corporation
Engineered Polymer Systems Division
Phone: 801 972 3000

Table 9-14. PDT Gland Dimensions (Rod, Cut-To-Length) — Inch (Continued)

A1 Rod Diameter	B1 Groove Diameter	C1 Piston Diameter	D Groove Width	Part Number
+.000/-.004	**+.003/-.000**	**+.003/-.000**	**+.010/-.000**	**PDTF**
4.750	5.001	4.772	D = W + 0.010"	**XXXX PDTF 04750 X XXXX**
4.875	5.126	4.897	D = W + 0.010"	**XXXX PDTF 04875 X XXXX**
5.000	5.251	5.022	D = W + 0.010"	**XXXX PDTF 05000 X XXXX**
5.125	5.376	5.147	D = W + 0.010"	**XXXX PDTF 05125 X XXXX**
5.250	5.501	5.272	D = W + 0.010"	**XXXX PDTF 05250 X XXXX**
5.375	5.626	5.397	D = W + 0.010"	**XXXX PDTF 05375 X XXXX**
5.500	5.751	5.522	D = W + 0.010"	**XXXX PDTF 05500 X XXXX**
5.625	5.876	5.647	D = W + 0.010"	**XXXX PDTF 05625 X XXXX**
5.750	6.001	5.772	D = W + 0.010"	**XXXX PDTF 05750 X XXXX**
5.875	6.126	5.897	D = W + 0.010"	**XXXX PDTF 05875 X XXXX**
6.000	6.251	6.022	D = W + 0.010"	**XXXX PDTF 06000 X XXXX**
6.250	6.501	6.272	D = W + 0.010"	**XXXX PDTF 06250 X XXXX**
6.500	6.751	6.522	D = W + 0.010"	**XXXX PDTF 06500 X XXXX**
6.750	7.001	6.772	D = W + 0.010"	**XXXX PDTF 06750 X XXXX**
7.000	7.251	7.022	D = W + 0.010"	**XXXX PDTF 07000 X XXXX**
7.250	7.501	7.272	D = W + 0.010"	**XXXX PDTF 07250 X XXXX**
7.500	7.751	7.522	D = W + 0.010"	**XXXX PDTF 07500 X XXXX**
+.000/-.006	**+.004/-.000**	**+.004/-.000**	**+.010/-.000**	**PDTF**
7.750	8.001	7.773	D = W + 0.010"	**XXXX PDTF 07750 X XXXX**
8.000	8.251	8.023	D = W + 0.010"	**XXXX PDTF 08000 X XXXX**
8.500	8.751	8.523	D = W + 0.010"	**XXXX PDTF 08500 X XXXX**
9.000	9.251	9.023	D = W + 0.010"	**XXXX PDTF 09000 X XXXX**
9.500	9.751	9.523	D = W + 0.010"	**XXXX PDTF 09500 X XXXX**
10.000	10.251	10.023	D = W + 0.010"	**XXXX PDTF 10000 X XXXX**

For custom groove calculations, see Appendix C.

NOTE: For sizes larger than those shown in the table, please contact your local Parker Seal representative.

PDT Rod Groove Calculation

See Rod Wear Ring Groove Calculation in Appendix C.

Parker Hannifin Corporation
Engineered Polymer Systems Division
Phone: 801 972 3000

PDT Bulk Strip

Table 9-15. PDT Bulk Strip Standard Sizes

T Radial Cross-Section	W Width	Part Number
062		
0.062	0.250	**XXXX PDTH 062-0250**
0.062	0.375	**XXXX PDTH 062-0375**
0.062	0.500	**XXXX PDTH 062-0500**
0.062	0.625	**XXXX PDTH 062-0625**
093		
0.093	0.250	**XXXX PDTH 093-0250**
0.093	0.375	**XXXX PDTH 093-0375**
0.093	0.500	**XXXX PDTH 093-0500**
0.093	0.625	**XXXX PDTH 093-0625**
125		
0.125	0.250	**XXXX PDTH 125-0250**
0.125	0.375	**XXXX PDTH 125-0375**
0.125	0.500	**XXXX PDTH 125-0500**
0.125	0.625	**XXXX PDTH 125-0625**
0.125	0.750	**XXXX PDTH 125-0750**
0.125	1.000	**XXXX PDTH 125-1000**

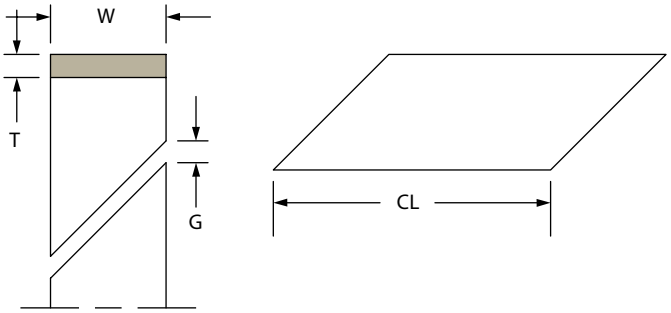

NOTE: For sizes larger than those shown in the table, please contact your local Parker Seal representative.

Cutting Instructions

Table 9-16. Recommended Cutting Instructions

Rod or Bore Diameter	G Minimum Gap	CL ± Tolerance for Cut Length
0.500" - 1.750"	0.075	± .010
1.751" - 3.125"	0.140	± .016
3.126" - 4.000"	0.175	± .024
4.001" - 5.000"	0.230	± .032
5.001" - 6.000"	0.260	± .040
6.001" - 7.000"	0.320	± .047
7.001" - 8.500"	0.380	± .055
8.501" - 10.500"	0.480	± .063
10.501" - 13.000"	0.620	± .071
13.001" - 16.000"	0.750	± .079

NOTE: For sizes larger than those shown in the table, please contact your local Parker Seal representative.

Formula for Calculating Cut Length, CL

For Pistons:

$$CL = [(Bore\ Diameter - T) \times \pi] - G$$

For Rods:

$$CL = [(Rod\ Diameter + T) \times \pi] - G$$

To calculate groove dimensions, use either the pre-established values or the formulas for cut-to-length PDT strip found on Pages 9-23 and 9-26.

09/01/07

Wear Ring / Bearing
PDW Profile

PDW Profile, Machined Wear Ring for Rod and Piston

PDW wear rings are precision machined PTFE bearings, lathe cut to exact size and shape. PDWs offer precise fitting and easy installation. The wide range of available PTFE blends gives these machined wear rings versatility to accommodate any pneumatic or light-duty hydraulic application requiring low friction and high temperature capabilities.

Technical Data

Standard Material
0401 – 40% Bronze-Filled PTFE
0307 – 23% Carbon, 2% Graphite-Filled PTFE
Others available upon request

Radial Tolerance
+.000"/-.004"

End Cuts
Butt Cut, Angle Cut, Step Cut

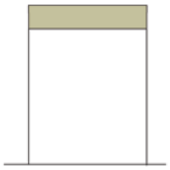

PDW Cross-Section

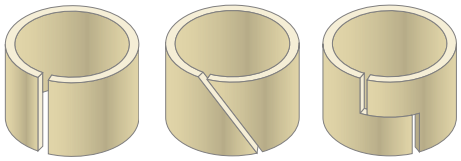

Butt Cut *Angle Cut* *Step Cut*

Options
Virtually any width, diameter and cross-section can be produced without assessing a setup charge.

Piston sealing system comprised of PDW machined wear rings and E4 piston u-cups

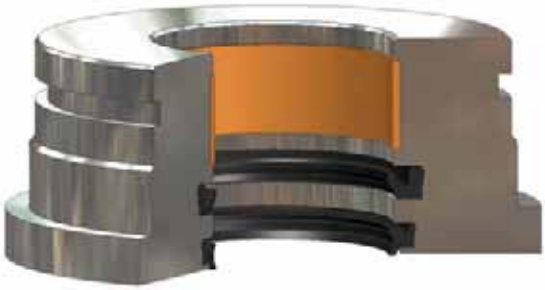

Rod sealing system comprised of PDW machined wear ring, E5 u-cup and 8600 wiper

09/01/07

Parker Hannifin Corporation
Engineered Polymer Systems Division
Phone: 801 972 3000
www.parkerseals.com

Part Number Nomenclature — PDW Profile

Table 9-17. PDW Profile

0 4 0 1 — Material
4 Digit Material Code
Example:
0401 = Bronze-filled PTFE
(0401, 0307, Others Available)

PDW — Profile

C — Style
Examples:
A = Piston; 0.062" thick
B = Piston; 0.093" thick
C = Piston; 0.125" thick
D = Rod; 0.062" thick
E = Rod; 0.093" thick
F = Rod; 0.125" thick

0 4 5 0 0 — Nominal Diameter (x1000)
Example: "C" Style, 04500 = 4.500" Bore
(Bore Dia. for Styles A, B, C)
(Rod Dia. for Styles D, E, F)

B — Cut Type
Examples:
A = Angle Cut
B = Butt Cut
C = Step Cut

0 5 0 0 — Nominal Width (W) (x1000)
Example:
0.500" X 1000 = 0500
(0125 to 2000 or larger)

Gland Dimensions — PDW Profile, Piston

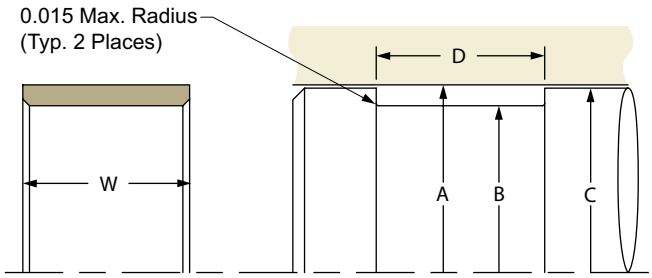

Please refer to Engineering Section 2, page 2-8 for surface finish and additional hardware considerations.

Table 9-18. PDW Gland Dimensions (Piston) — Inch

A Bore Diameter	B Groove Diameter	C Piston Diameter	D Groove Width	Part Number
+.002/-.000	+.000/-.002	+.000/-.002	+.010/-.000	PDWA
0.687	0.562	0.666	D = W + 0.010"	XXXX PDWA 00687 X XXXX
0.750	0.625	0.729	D = W + 0.010"	XXXX PDWA 00750 X XXXX
0.812	0.687	0.791	D = W + 0.010"	XXXX PDWA 00812 X XXXX
0.875	0.750	0.854	D = W + 0.010"	XXXX PDWA 00875 X XXXX
0.937	0.812	0.916	D = W + 0.010"	XXXX PDWA 00937 X XXXX
1.000	0.875	0.979	D = W + 0.010"	XXXX PDWA 01000 X XXXX
1.062	0.937	1.041	D = W + 0.010"	XXXX PDWA 01062 X XXXX
1.125	1.000	1.104	D = W + 0.010"	XXXX PDWA 01125 X XXXX
1.187	1.062	1.166	D = W + 0.010"	XXXX PDWA 01187 X XXXX
1.250	1.125	1.229	D = W + 0.010"	XXXX PDWA 01250 X XXXX
1.312	1.187	1.291	D = W + 0.010"	XXXX PDWA 01312 X XXXX
1.375	1.250	1.354	D = W + 0.010"	XXXX PDWA 01375 X XXXX
1.437	1.312	1.416	D = W + 0.010"	XXXX PDWA 01437 X XXXX
1.500	1.375	1.479	D = W + 0.010"	XXXX PDWA 01500 X XXXX
1.562	1.437	1.541	D = W + 0.010"	XXXX PDWA 01562 X XXXX
1.625	1.500	1.604	D = W + 0.010"	XXXX PDWA 01625 X XXXX
1.687	1.562	1.666	D = W + 0.010"	XXXX PDWA 01687 X XXXX

For custom groove calculations, see Appendix C.

Parker Hannifin Corporation
Engineered Polymer Systems Division
Phone: 801 972 3000

Table 9-18. PDW Gland Dimensions (Piston) — Inch (Continued)

A Bore Diameter	B Groove Diameter	C Piston Diameter	D Groove Width	Part Number
+.002/-.000	+.000/-.002	+.000/-.002	+.010/-.000	PDWA
1.750	1.625	1.729	D = W + 0.010"	XXXX PDWA 01750 X XXXX
1.875	1.750	1.854	D = W + 0.010"	XXXX PDWA 01875 X XXXX
2.000	1.875	1.979	D = W + 0.010"	XXXX PDWA 02000 X XXXX
+.002/-.000	+.000/-.002	+.000/-.002	+.010/-.000	PDWB
1.500	1.313	1.479	D = W + 0.010"	XXXX PDWB 01500 X XXXX
1.562	1.375	1.541	D = W + 0.010"	XXXX PDWB 01562 X XXXX
1.625	1.438	1.604	D = W + 0.010"	XXXX PDWB 01625 X XXXX
1.687	1.500	1.666	D = W + 0.010"	XXXX PDWB 01687 X XXXX
1.750	1.563	1.729	D = W + 0.010"	XXXX PDWB 01750 X XXXX
1.875	1.688	1.854	D = W + 0.010"	XXXX PDWB 01875 X XXXX
2.000	1.813	1.979	D = W + 0.010"	XXXX PDWB 02000 X XXXX
2.125	1.938	2.104	D = W + 0.010"	XXXX PDWB 02125 X XXXX
2.250	2.063	2.229	D = W + 0.010"	XXXX PDWB 02250 X XXXX
2.375	2.188	2.354	D = W + 0.010"	XXXX PDWB 02375 X XXXX
2.500	2.313	2.479	D = W + 0.010"	XXXX PDWB 02500 X XXXX
2.625	2.438	2.604	D = W + 0.010"	XXXX PDWB 02625 X XXXX
2.750	2.563	2.729	D = W + 0.010"	XXXX PDWB 02750 X XXXX
2.875	2.688	2.854	D = W + 0.010"	XXXX PDWB 02875 X XXXX
3.000	2.813	2.979	D = W + 0.010"	XXXX PDWB 03000 X XXXX
3.125	2.938	3.104	D = W + 0.010"	XXXX PDWB 03125 X XXXX
3.250	3.063	3.229	D = W + 0.010"	XXXX PDWB 03250 X XXXX
3.375	3.188	3.354	D = W + 0.010"	XXXX PDWB 03375 X XXXX
3.500	3.313	3.479	D = W + 0.010"	XXXX PDWB 03500 X XXXX
3.625	3.438	3.604	D = W + 0.010"	XXXX PDWB 03625 X XXXX
3.750	3.563	3.729	D = W + 0.010"	XXXX PDWB 03750 X XXXX
3.875	3.688	3.854	D = W + 0.010"	XXXX PDWB 03875 X XXXX
4.000	3.813	3.979	D = W + 0.010"	XXXX PDWB 04000 X XXXX
4.125	3.938	4.104	D = W + 0.010"	XXXX PDWB 04125 X XXXX
4.250	4.063	4.229	D = W + 0.010"	XXXX PDWB 04250 X XXXX
4.375	4.188	4.354	D = W + 0.010"	XXXX PDWB 04375 X XXXX
4.500	4.313	4.479	D = W + 0.010"	XXXX PDWB 04500 X XXXX
4.625	4.438	4.604	D = W + 0.010"	XXXX PDWB 04625 X XXXX
4.750	4.563	4.729	D = W + 0.010"	XXXX PDWB 04750 X XXXX
4.875	4.688	4.854	D = W + 0.010"	XXXX PDWB 04875 X XXXX
5.000	4.813	4.978	D = W + 0.010"	XXXX PDWB 05000 X XXXX
5.125	4.938	5.103	D = W + 0.010"	XXXX PDWB 05125 X XXXX
5.250	5.063	5.228	D = W + 0.010"	XXXX PDWB 05250 X XXXX
5.375	5.188	5.353	D = W + 0.010"	XXXX PDWB 05375 X XXXX
5.500	5.313	5.478	D = W + 0.010"	XXXX PDWB 05500 X XXXX
5.625	5.438	5.603	D = W + 0.010"	XXXX PDWB 05625 X XXXX
5.750	5.563	5.728	D = W + 0.010"	XXXX PDWB 05750 X XXXX
5.875	5.688	5.853	D = W + 0.010"	XXXX PDWB 05875 X XXXX
6.000	5.813	5.978	D = W + 0.010"	XXXX PDWB 06000 X XXXX

For custom groove calculations, see Appendix C.

09/01/07

Parker Hannifin Corporation
Engineered Polymer Systems Division
Phone: 801 972 3000

Table 9-18. PDW Gland Dimensions (Piston) — Inch (Continued)

A Bore Diameter	B Groove Diameter	C Piston Diameter	D Groove Width	Part Number
+.002/-.000	**+.000/-.002**	**+.000/-.002**	**+.010/-.000**	**PDWB**
6.125	5.938	6.103	D = W + 0.010"	**XXXX PDWB 06125 X XXXX**
6.250	6.063	6.228	D = W + 0.010"	**XXXX PDWB 06250 X XXXX**
6.375	6.188	6.353	D = W + 0.010"	**XXXX PDWB 06375 X XXXX**
6.500	6.313	6.478	D = W + 0.010"	**XXXX PDWB 06500 X XXXX**
6.750	6.563	6.728	D = W + 0.010"	**XXXX PDWB 06750 X XXXX**
7.000	6.813	6.978	D = W + 0.010"	**XXXX PDWB 07000 X XXXX**
7.250	7.063	7.228	D = W + 0.010"	**XXXX PDWB 07250 X XXXX**
7.500	7.313	7.478	D = W + 0.010"	**XXXX PDWB 07500 X XXXX**
7.750	7.563	7.728	D = W + 0.010"	**XXXX PDWB 07750 X XXXX**
+.006/-.000	**+.000/-.004**	**+.000/-.004**	**+.010/-.000**	**PDWB**
8.000	7.813	7.977	D = W + 0.010"	**XXXX PDWB 08000 X XXXX**
8.250	8.063	8.227	D = W + 0.010"	**XXXX PDWB 08250 X XXXX**
8.500	8.313	8.477	D = W + 0.010"	**XXXX PDWB 08500 X XXXX**
9.000	8.813	8.977	D = W + 0.010"	**XXXX PDWB 09000 X XXXX**
9.500	9.313	9.477	D = W + 0.010"	**XXXX PDWB 09500 X XXXX**
10.000	9.813	9.977	D = W + 0.010"	**XXXX PDWB 10000 X XXXX**
+.002/-.000	**+.000/-.002**	**+.000/-.002**	**+.010/-.000**	**PDWC**
2.000	1.749	1.979	D = W + 0.010"	**XXXX PDWC 02000 X XXXX**
2.125	1.874	2.104	D = W + 0.010"	**XXXX PDWC 02125 X XXXX**
2.250	1.999	2.229	D = W + 0.010"	**XXXX PDWC 02250 X XXXX**
2.375	2.124	2.354	D = W + 0.010"	**XXXX PDWC 02375 X XXXX**
2.500	2.249	2.479	D = W + 0.010"	**XXXX PDWC 02500 X XXXX**
2.625	2.374	2.604	D = W + 0.010"	**XXXX PDWC 02625 X XXXX**
2.750	2.499	2.729	D = W + 0.010"	**XXXX PDWC 02750 X XXXX**
2.875	2.624	2.854	D = W + 0.010"	**XXXX PDWC 02875 X XXXX**
3.000	2.749	2.979	D = W + 0.010"	**XXXX PDWC 03000 X XXXX**
3.125	2.874	3.104	D = W + 0.010"	**XXXX PDWC 03125 X XXXX**
3.250	2.999	3.229	D = W + 0.010"	**XXXX PDWC 03250 X XXXX**
3.375	3.124	3.354	D = W + 0.010"	**XXXX PDWC 03375 X XXXX**
3.500	3.249	3.479	D = W + 0.010"	**XXXX PDWC 03500 X XXXX**
3.625	3.374	3.604	D = W + 0.010"	**XXXX PDWC 03625 X XXXX**
3.750	3.499	3.729	D = W + 0.010"	**XXXX PDWC 03750 X XXXX**
3.875	3.624	3.854	D = W + 0.010"	**XXXX PDWC 03875 X XXXX**
4.000	3.749	3.979	D = W + 0.010"	**XXXX PDWC 04000 X XXXX**
4.125	3.874	4.104	D = W + 0.010"	**XXXX PDWC 04125 X XXXX**
4.250	3.999	4.229	D = W + 0.010"	**XXXX PDWC 04250 X XXXX**
4.375	4.124	4.354	D = W + 0.010"	**XXXX PDWC 04375 X XXXX**
4.500	4.249	4.479	D = W + 0.010"	**XXXX PDWC 04500 X XXXX**
4.625	4.374	4.604	D = W + 0.010"	**XXXX PDWC 04625 X XXXX**
4.750	4.499	4.729	D = W + 0.010"	**XXXX PDWC 04750 X XXXX**
4.875	4.624	4.854	D = W + 0.010"	**XXXX PDWC 04875 X XXXX**
5.000	4.749	4.978	D = W + 0.010"	**XXXX PDWC 05000 X XXXX**
5.125	4.874	5.103	D = W + 0.010"	**XXXX PDWC 05125 X XXXX**

For custom groove calculations, see Appendix C.

Parker Hannifin Corporation
Engineered Polymer Systems Division
Phone: 801 972 3000

Table 9-18. PDW Gland Dimensions (Piston) — Inch (Continued)

A Bore Diameter	B Groove Diameter	C Piston Diameter	D Groove Width	Part Number
+.004/-.000	+.000/-.003	+.000/-.003	+.010/-.000	PDWC
5.250	4.999	5.228	D = W + 0.010"	**XXXX PDWC 05250 X XXXX**
5.375	5.124	5.353	D = W + 0.010"	**XXXX PDWC 05375 X XXXX**
5.500	5.249	5.478	D = W + 0.010"	**XXXX PDWC 05500 X XXXX**
5.625	5.374	5.603	D = W + 0.010"	**XXXX PDWC 05625 X XXXX**
5.750	5.499	5.728	D = W + 0.010"	**XXXX PDWC 05750 X XXXX**
5.875	5.624	5.853	D = W + 0.010"	**XXXX PDWC 05875 X XXXX**
6.000	5.749	5.978	D = W + 0.010"	**XXXX PDWC 06000 X XXXX**
6.125	5.874	6.103	D = W + 0.010"	**XXXX PDWC 06125 X XXXX**
6.250	5.999	6.228	D = W + 0.010"	**XXXX PDWC 06250 X XXXX**
6.375	6.124	6.353	D = W + 0.010"	**XXXX PDWC 06375 X XXXX**
6.500	6.249	6.478	D = W + 0.010"	**XXXX PDWC 06500 X XXXX**
6.750	6.499	6.728	D = W + 0.010"	**XXXX PDWC 06750 X XXXX**
7.000	6.749	6.978	D = W + 0.010"	**XXXX PDWC 07000 X XXXX**
7.250	6.999	7.228	D = W + 0.010"	**XXXX PDWC 07250 X XXXX**
7.500	7.249	7.478	D = W + 0.010"	**XXXX PDWC 07500 X XXXX**
7.750	7.499	7.728	D = W + 0.010"	**XXXX PDWC 07750 X XXXX**
8.000	7.749	7.977	D = W + 0.010"	**XXXX PDWC 08000 X XXXX**
8.250	7.999	8.227	D = W + 0.010"	**XXXX PDWC 08250 X XXXX**
8.500	8.249	8.477	D = W + 0.010"	**XXXX PDWC 08500 X XXXX**
9.000	8.749	8.977	D = W + 0.010"	**XXXX PDWC 09000 X XXXX**
9.500	9.249	9.477	D = W + 0.010"	**XXXX PDWC 09500 X XXXX**
10.000	9.749	9.977	D = W + 0.010"	**XXXX PDWC 10000 X XXXX**
10.500	10.249	10.477	D = W + 0.010"	**XXXX PDWC 10500 X XXXX**
11.000	10.749	10.977	D = W + 0.010"	**XXXX PDWC 11000 X XXXX**
11.500	11.249	11.477	D = W + 0.010"	**XXXX PDWC 11500 X XXXX**
12.000	11.749	11.977	D = W + 0.010"	**XXXX PDWC 12000 X XXXX**
12.500	12.249	12.477	D = W + 0.010"	**XXXX PDWC 12500 X XXXX**
13.000	12.749	12.977	D = W + 0.010"	**XXXX PDWC 13000 X XXXX**
13.500	13.249	13.477	D = W + 0.010"	**XXXX PDWC 13500 X XXXX**
14.000	13.749	13.977	D = W + 0.010"	**XXXX PDWC 14000 X XXXX**
14.500	14.249	14.477	D = W + 0.010"	**XXXX PDWC 14500 X XXXX**
15.000	14.749	14.977	D = W + 0.010"	**XXXX PDWC 15000 X XXXX**
15.500	15.249	15.477	D = W + 0.010"	**XXXX PDWC 15500 X XXXX**
16.000	15.749	15.977	D = W + 0.010"	**XXXX PDWC 16000 X XXXX**

For custom groove calculations, see Appendix C.

NOTE: For sizes larger than those shown in the table, please contact your local Parker Seal representative.

PDW Piston Groove Calculation

See Piston Wear Ring Groove Calculation in Appendix C.

Parker Hannifin Corporation
Engineered Polymer Systems Division
Phone: 801 972 3000

Gland Dimensions — PDW Profile, Rod

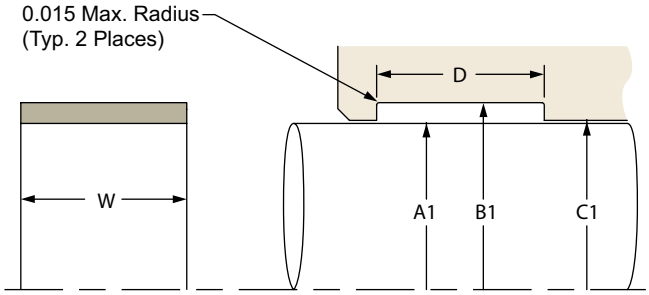

Please refer to Engineering Section 2, page 2-8 for surface finish and additional hardware considerations.

Table 9-19. PDW Gland Dimensions (Rod) — Inch

A1 Rod Diameter	B1 Groove Diameter	C1 Throat Diameter	D Groove Width	Part Number
+.000/-.002	+.002/-.000	+.002/-.000	+.010/-.000	PDWD
0.312	0.437	0.333	D = W + 0.010"	XXXX PDWD 00875 X XXXX
0.375	0.500	0.396	D = W + 0.010"	XXXX PDWD 00375 X XXXX
0.437	0.562	0.458	D = W + 0.010"	XXXX PDWD 00437 X XXXX
0.500	0.625	0.521	D = W + 0.010"	XXXX PDWD 00500 X XXXX
0.562	0.687	0.583	D = W + 0.010"	XXXX PDWD 00562 X XXXX
0.625	0.750	0.646	D = W + 0.010"	XXXX PDWD 00625 X XXXX
0.687	0.812	0.708	D = W + 0.010"	XXXX PDWD 00687 X XXXX
0.750	0.875	0.771	D = W + 0.010"	XXXX PDWD 00750 X XXXX
0.812	0.937	0.833	D = W + 0.010"	XXXX PDWD 00812 X XXXX
0.875	1.000	0.896	D = W + 0.010"	XXXX PDWD 00875 X XXXX
0.937	1.062	0.958	D = W + 0.010"	XXXX PDWD 00937 X XXXX
1.000	1.125	1.021	D = W + 0.010"	XXXX PDWD 01000 X XXXX
1.062	1.187	1.083	D = W + 0.010"	XXXX PDWD 01062 X XXXX
1.125	1.250	1.146	D = W + 0.010"	XXXX PDWD 01125 X XXXX
1.187	1.312	1.208	D = W + 0.010"	XXXX PDWD 01187 X XXXX
1.250	1.375	1.271	D = W + 0.010"	XXXX PDWD 01250 X XXXX
1.312	1.437	1.333	D = W + 0.010"	XXXX PDWD 01312 X XXXX
1.375	1.500	1.396	D = W + 0.010"	XXXX PDWD 01375 X XXXX
1.437	1.562	1.458	D = W + 0.010"	XXXX PDWD 01437 X XXXX
1.500	1.625	1.521	D = W + 0.010"	XXXX PDWD 01500 X XXXX
1.625	1.750	1.646	D = W + 0.010"	XXXX PDWD 01625 X XXXX
1.750	1.875	1.771	D = W + 0.010"	XXXX PDWD 01750 X XXXX
1.875	2.000	1.896	D = W + 0.010"	XXXX PDWD 01875 X XXXX
2.000	2.125	2.021	D = W + 0.010"	XXXX PDWD 02000 X XXXX
+.000/-.002	+.002/-.000	+.002/-.000	+.010/-.000	PDWE
1.500	1.687	1.521	D = W + 0.010"	XXXX PDWE 01500 X XXXX
1.625	1.812	1.646	D = W + 0.010"	XXXX PDWE 01625 X XXXX
1.750	1.937	1.771	D = W + 0.010"	XXXX PDWE 01750 X XXXX
1.875	2.062	1.896	D = W + 0.010"	XXXX PDWE 01875 X XXXX
2.000	2.187	2.021	D = W + 0.010"	XXXX PDWE 02000 X XXXX
2.125	2.312	2.146	D = W + 0.010"	XXXX PDWE 02125 X XXXX
2.250	2.437	2.271	D = W + 0.010"	XXXX PDWE 02250 X XXXX
2.375	2.562	2.396	D = W + 0.010"	XXXX PDWE 02375 X XXXX

For custom groove calculations, see Appendix C.

Parker Hannifin Corporation
Engineered Polymer Systems Division
Phone: 801 972 3000

Table 9-19. PDW Gland Dimensions (Rod) — Inch (Continued)

A1 Rod Diameter	B1 Groove Diameter	C1 Throat Diameter	D Groove Width	Part Number
+.000/-.002	+.002/-.000	+.002/-.000	+.010/-.000	PDWE
2.500	2.687	2.521	D = W + 0.010"	XXXX PDWE 02500 X XXXX
2.625	2.812	2.646	D = W + 0.010"	XXXX PDWE 02625 X XXXX
2.750	2.937	2.771	D = W + 0.010"	XXXX PDWE 02750 X XXXX
2.875	3.062	2.896	D = W + 0.010"	XXXX PDWE 02875 X XXXX
3.000	3.187	3.021	D = W + 0.010"	XXXX PDWE 03000 X XXXX
3.125	3.312	3.146	D = W + 0.010"	XXXX PDWE 03125 X XXXX
3.250	3.437	3.271	D = W + 0.010"	XXXX PDWE 03250 X XXXX
3.375	3.562	3.396	D = W + 0.010"	XXXX PDWE 03375 X XXXX
3.500	3.687	3.521	D = W + 0.010"	XXXX PDWE 03500 X XXXX
3.625	3.812	3.646	D = W + 0.010"	XXXX PDWE 03625 X XXXX
3.750	3.937	3.771	D = W + 0.010"	XXXX PDWE 03750 X XXXX
3.875	4.062	3.896	D = W + 0.010"	XXXX PDWE 03875 X XXXX
4.000	4.187	4.021	D = W + 0.010"	XXXX PDWE 04000 X XXXX
4.125	4.312	4.146	D = W + 0.010"	XXXX PDWE 04125 X XXXX
4.250	4.437	4.271	D = W + 0.010"	XXXX PDWE 04250 X XXXX
4.375	4.562	4.396	D = W + 0.010"	XXXX PDWE 04375 X XXXX
4.500	4.687	4.521	D = W + 0.010"	XXXX PDWE 04500 X XXXX
4.625	4.812	4.646	D = W + 0.010"	XXXX PDWE 04625 X XXXX
4.750	4.937	4.771	D = W + 0.010"	XXXX PDWE 04750 X XXXX
4.875	5.062	4.896	D = W + 0.010"	XXXX PDWE 04875 X XXXX
5.000	5.187	5.021	D = W + 0.010"	XXXX PDWE 05000 X XXXX
+.000/-.002	+.002/-.000	+.002/-.000	+.010/-.000	PDWF
1.500	1.751	1.521	D = W + 0.010"	XXXX PDWF 01500 X XXXX
1.625	1.876	1.646	D = W + 0.010"	XXXX PDWF 01625 X XXXX
1.750	2.001	1.771	D = W + 0.010"	XXXX PDWF 01750 X XXXX
1.875	2.126	1.896	D = W + 0.010"	XXXX PDWF 01875 X XXXX
2.000	2.251	2.021	D = W + 0.010"	XXXX PDWF 02000 X XXXX
2.125	2.376	2.146	D = W + 0.010"	XXXX PDWF 02125 X XXXX
2.250	2.501	2.271	D = W + 0.010"	XXXX PDWF 02250 X XXXX
2.375	2.626	2.396	D = W + 0.010"	XXXX PDWF 02375 X XXXX
2.500	2.751	2.521	D = W + 0.010"	XXXX PDWF 02500 X XXXX
2.625	2.876	2.646	D = W + 0.010"	XXXX PDWF 02625 X XXXX
2.750	3.001	2.771	D = W + 0.010"	XXXX PDWF 02750 X XXXX
2.875	3.126	2.896	D = W + 0.010"	XXXX PDWF 02875 X XXXX
3.000	3.251	3.021	D = W + 0.010"	XXXX PDWF 03000 X XXXX
3.125	3.376	3.146	D = W + 0.010"	XXXX PDWF 03125 X XXXX
3.250	3.501	3.271	D = W + 0.010"	XXXX PDWF 03250 X XXXX
3.375	3.626	3.396	D = W + 0.010"	XXXX PDWF 03375 X XXXX
3.500	3.751	3.521	D = W + 0.010"	XXXX PDWF 03500 X XXXX
3.625	3.876	3.646	D = W + 0.010"	XXXX PDWF 03625 X XXXX
3.750	4.001	3.771	D = W + 0.010"	XXXX PDWF 03750 X XXXX
3.875	4.126	3.896	D = W + 0.010"	XXXX PDWF 03875 X XXXX
4.000	4.251	4.021	D = W + 0.010"	XXXX PDWF 04000 X XXXX

For custom groove calculations, see Appendix C.

Parker Hannifin Corporation
Engineered Polymer Systems Division
Phone: 801 972 3000

Table 9-19. PDW Gland Dimensions (Rod) — Inch (Continued)

A1 Rod Diameter	B1 Groove Diameter	C1 Throat Diameter	D Groove Width	Part Number
4.125	4.376	4.146	D = W + 0.010"	**XXXX PDWF 04125 X XXXX**
4.250	4.501	4.271	D = W + 0.010"	**XXXX PDWF 04250 X XXXX**
4.375	4.626	4.396	D = W + 0.010"	**XXXX PDWF 04375 X XXXX**
4.500	4.751	4.521	D = W + 0.010"	**XXXX PDWF 04500 X XXXX**
4.625	4.876	4.646	D = W + 0.010"	**XXXX PDWF 04625 X XXXX**
+.000/-.004	**+.003/-.000**	**+.003/-.000**	**+.010/-.000**	**PDWF**
4.750	5.001	4.772	D = W + 0.010"	**XXXX PDWF 04750 X XXXX**
4.875	5.126	4.897	D = W + 0.010"	**XXXX PDWF 04875 X XXXX**
5.000	5.251	5.022	D = W + 0.010"	**XXXX PDWF 05000 X XXXX**
5.125	5.376	5.147	D = W + 0.010"	**XXXX PDWF 05125 X XXXX**
5.250	5.501	5.272	D = W + 0.010"	**XXXX PDWF 05250 X XXXX**
5.375	5.626	5.397	D = W + 0.010"	**XXXX PDWF 05375 X XXXX**
5.500	5.751	5.522	D = W + 0.010"	**XXXX PDWF 05500 X XXXX**
5.625	5.876	5.647	D = W + 0.010"	**XXXX PDWF 05625 X XXXX**
5.750	6.001	5.772	D = W + 0.010"	**XXXX PDWF 05750 X XXXX**
5.875	6.126	5.897	D = W + 0.010"	**XXXX PDWF 05875 X XXXX**
6.000	6.251	6.022	D = W + 0.010"	**XXXX PDWF 06000 X XXXX**
6.250	6.501	6.272	D = W + 0.010"	**XXXX PDWF 06250 X XXXX**
6.500	6.751	6.522	D = W + 0.010"	**XXXX PDWF 06500 X XXXX**
6.750	7.001	6.772	D = W + 0.010"	**XXXX PDWF 06750 X XXXX**
7.000	7.251	7.022	D = W + 0.010"	**XXXX PDWF 07000 X XXXX**
7.250	7.501	7.272	D = W + 0.010"	**XXXX PDWF 07250 X XXXX**
7.500	7.751	7.522	D = W + 0.010"	**XXXX PDWF 07500 X XXXX**

For custom groove calculations, see Appendix C.

NOTE: For sizes larger than those shown in the table, please contact your local Parker Seal representative.

PDW Rod Groove Calculation

See Rod Wear Ring Groove Calculations in Appendix C.

Parker Hannifin Corporation
Engineered Polymer Systems Division
Phone: 801 972 3000

Contents

Product Offering 10-3
Decision Tree 10-3
Product Profiles
MB 10-4
8700 10-10
5100 10-13
Positively-Activated..... 10-21
PDB 10-22

Back-up Rings

Back-up rings are the most common anti-extrusion devices in dynamic sealing. They provide simple solutions to safely increase system pressure or solve an existing seal extrusion problem. Back-up rings function by positioning a more robust material adjacent to the extrusion gap, taking the seal's place and providing a barrier against high pressures. Back-ups can be used to offset the reduced pressure rating effects of wear rings or to improve seal life at increased pressures. They can also be used to protect seals against pressure spikes, or to ensure seal performance at higher temperatures.

Parker offers a wide range of back-up ring profiles and materials to complement each seal type and to suit every application. Modular back-up rings disperse pressure from the seal throughout the gland to fill the extrusion gap and protect the seal (see Figure 10-1). The use of Profile MB can increase a PolyPak's pressure rating to 10,000 psi, while 8700 back-ups provide added extrusion resistance to u-cups with only a minimal increase in gland width.

Positively-actuated back-ups are actuated both axially and radially into the extrusion gap, guarding the seal against extrusion (see Figure 10-2). For many profiles, positively-actuated back-ups can provide the ultimate extrusion resistance while retaining the seal's original gland dimensions.

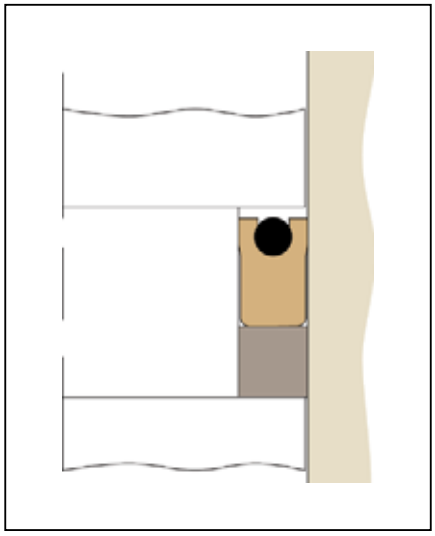

Figure 10-1. Modular Back-up Ring

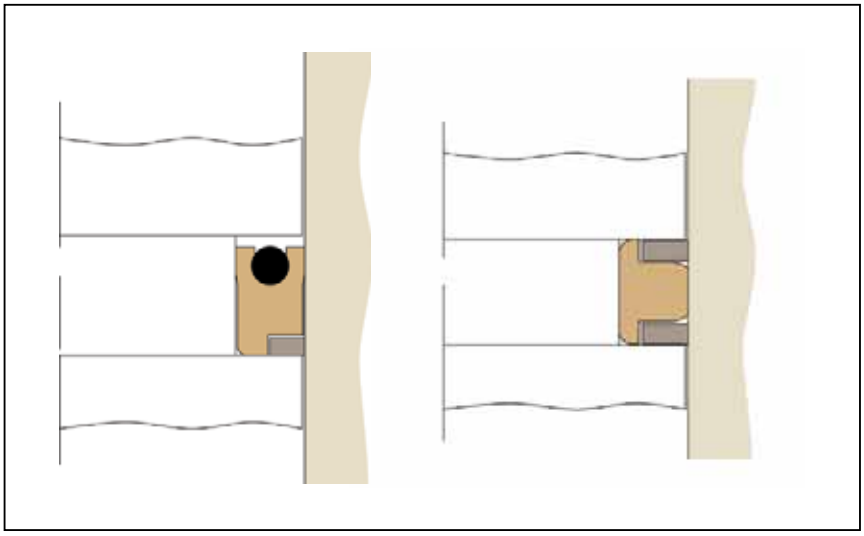

Figure 10-2. Positively-Actuated Back-up

Parker Hannifin Corporation
Engineered Polymer Systems Division
Phone: 801 972 3000

Back-up Rings Introduction (Continued)

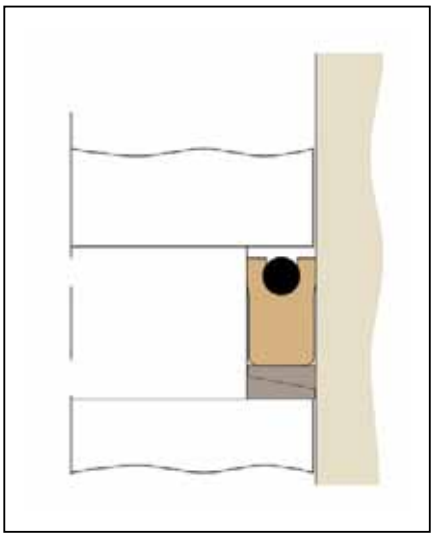

Figure 10-3. Angled Back-up

For extreme pressures, Parker can design custom back-up ring systems utilizing metal or engineered plastics technology and highly advanced geometries. In Figure 10-3 (angled back-ups), a single modular back-up is replaced with dual wedge-shaped back-ups, composed of UltraCOMP or bronze. As pressure increases, the angled back-ups are forced to bridge the clearance gap, eliminating extrusion. This method has been used successfully at pressures as high as 100,000 psi. Please contact Parker or your authorized distributor for engineering assistance in designing custom back-up configurations.

When to Use Back-up Rings

- System operating pressure exceeds the limitations of the seal's extrusion resistance.
- Pressure spikes in the system exceed normal operating conditions, risking damage to the seal.
- The use of wear rings has increased the extrusion gap, reducing the seal's pressure rating to an unacceptable level.
- The system temperature is high enough to lower the seal's extrusion resistance to an unacceptable level.

Parker Hannifin Corporation
Engineered Polymer Systems Division
Phone: 801 972 3000

Back-up Rings Product Offering

Profiles

Table 10-1: Product Profiles

Series	Description	Application (Duty)				Page
		Light	Medium	Heavy	Pneumatic	
MB	Modular Back-up for PolyPaks & U-cups					10-4
8700	Low Profile Back-up for PolyPaks & U-cups					10-10
5100	O-ring Groove Back-up					10-13

Series	Description	Application (Duty)				Page
		Light	Medium	Heavy	Pneumatic	
PAB	Positively-Activated Back-up					10-21
PDB	PTFE Back-up					10-22

Back-up Rings Decision Tree

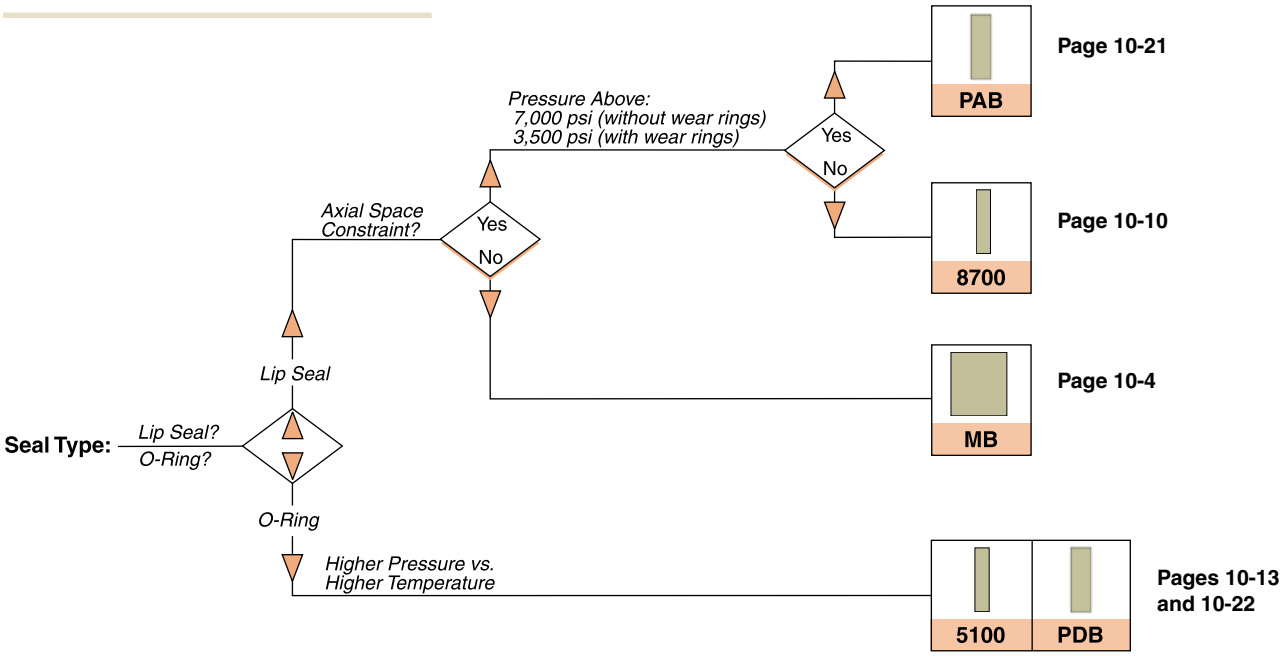

09/01/07

Parker Hannifin Corporation
Engineered Polymer Systems Division
Phone: 801 972 3000
www.parkerseals.com

Back-up Ring
MB Profile

MB Profile, Modular Back-up for PolyPaks and U-cups

Modular back-ups, MB profile, are specifically designed to compliment the PolyPak profiles. To help make the selection and ordering of the correct part number for the MB profile easy and efficient, the part numbering system used is very similar to that of the PolyPak. By formulating high modulus blends of Molythane (4617) and PolyMyte (4652), Parker has ensured that MB back-ups can be used with either type of base sealing material while maintaining the expected temperature range and fluid compatibility. The robust design ensures pressure ratings up to 10,000 psi are met.

Technical Data

Standard Materials*	Temperature	Max. Pressure Range**
P4617D65	-65°F to 250°F (-54°C to 121°C)	10,000 psi (689 bar)
Z4652D65	-65°F to 275°F (-54°C to 135°C)	10,000 psi (689 bar)

***Alternate Materials:** For applications that may require an alternate material, please contact your local Parker Seal representative.

** 7,000 psi (482 bar) with tight-tolerance wear rings.
5,000 psi (344 bar) with standard-tolerance wear rings.

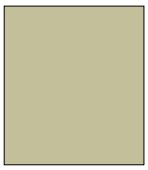

MB Cross-Section

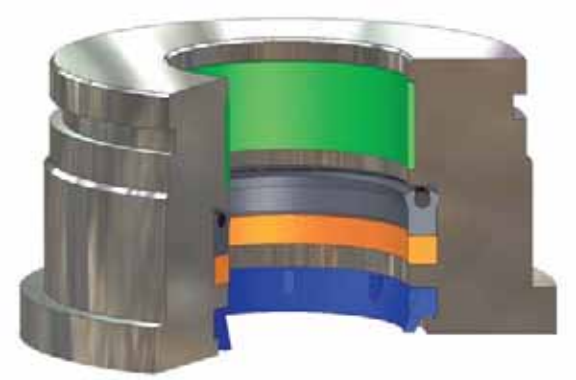

MB installed in Rod Gland

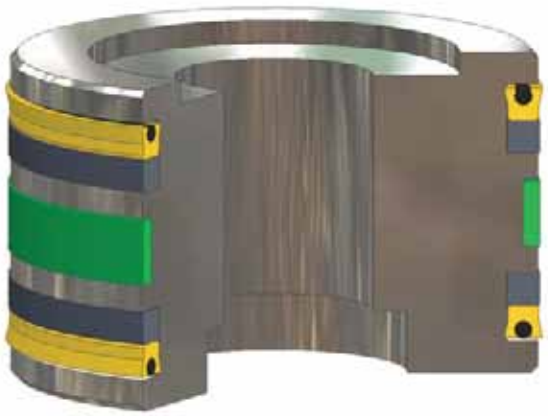

MB installed in Piston Gland

Parker Hannifin Corporation
Engineered Polymer Systems Division
Phone: 801 972 3000

Part Number Nomenclature — MB Profile

Table 10-2. MB Profile — Inch

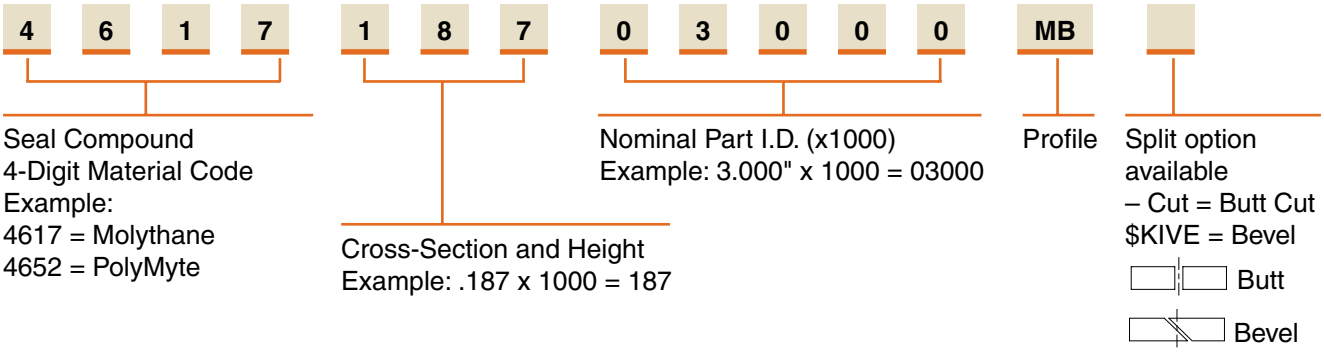

Gland Dimensions — MB Profile

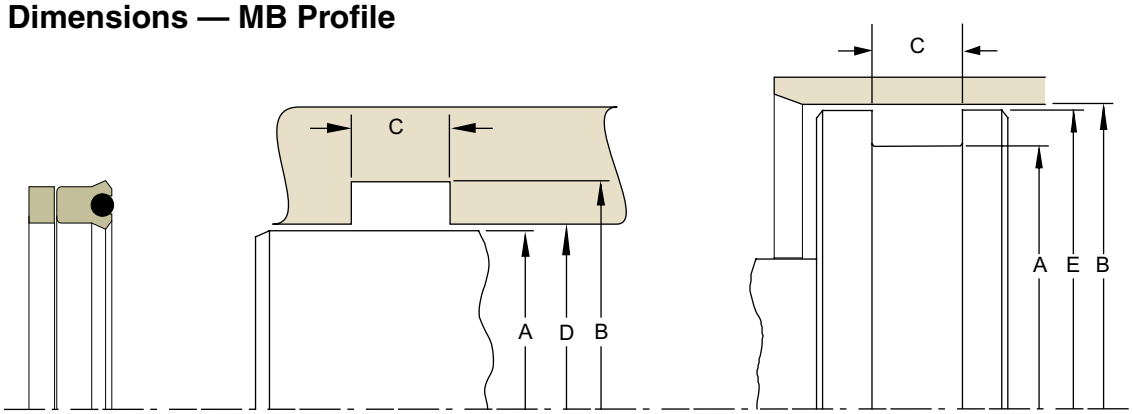

Please refer to Engineering Section 2, page 2-8 for surface finish and additional hardware considerations.

How to Determine the Gland Width when Using Modular Back-up Rings

The Modular Back-up ring allows you to extend the pressure rating of a seal that fits into the common gland used by such seals as the PolyPaks and the BS, BT, BD, B3, B7, UP, UR and US Profiles. In order to use the MB Back-up ring the width of the seal gland must be extended to account for the height of the Modular Back-up ing. Add the following width to the gland of the seal only as shown in this catalog.

Table 10-3. Added Gland Width Values

Seal Cross Section	Added Gland Width
1/8	0.138
3/16	0.206
1/4	0.275
5/16	0.343
3/8	0.413
7/16	0.481
1/2	0.550
5/8	0.688
3/4	0.825
1	1.100

For non-standard cross sections the added gland width can be determined by multiplying the cross section by (1.1). The tolerance on the extended gland remains the same as it is for the seal gland width, which is usually +.015.

Parker Hannifin Corporation
Engineered Polymer Systems Division
Phone: 801 972 3000

Table 10-4. MB Gland Dimensions — Inch (All dimensions are reference)

A	B	C	D	E	Material		Part Number
Rod Diameter	(Rod) Groove Diameter	(Rod) Groove Width	Throat Diameter*				
(Piston) Groove Diameter	Bore Diameter	Groove Width		Piston Diameter**	4617	4652	
0.125	0.375	Add to gland width the corresponding value from Table 10-3.	0.126	0.374	X	X	**xxxx12500125MB**
0.250	0.500		0.251	0.499	X	X	**xxxx12500250MB**
0.312	0.562		0.313	0.561	X		**xxxx12500312MB**
0.375	0.625		0.376	0.624	X	X	**xxxx12500375MB**
0.500	0.750		0.501	0.749	X	X	**xxxx12500500MB**
0.500	0.875		0.501	0.874	X		**xxxx18700500MB**
0.500	1.000		0.501	0.999	X	X	**xxxx25000500MB**
0.625	0.875		0.626	0.874	X	X	**xxxx12500625MB**
0.625	1.000		0.626	0.999	X	X	**xxxx18700625MB**
0.625	1.125		0.626	1.124	X		**xxxx25000625MB**
0.625	1.375		0.627	1.373		X	**xxxx37501000MB**
0.687	0.937		0.688	0.936	X		**xxxx12500687MB**
0.750	1.000		0.751	0.999	X	X	**xxxx12500750MB**
0.750	1.250		0.751	1.249	X	X	**xxxx25000750MB**
0.875	1.375		0.876	1.374	X		**xxxx25000875MB**
0.937	1.187		0.938	1.186	X		**xxxx12500937MB**
1.000	1.250		1.001	1.249	X	X	**xxxx12501000MB**
1.000	1.375		1.001	1.374	X		**xxxx18701000MB**
1.000	1.500		1.001	1.499	X	X	**xxxx25001000MB**
1.125	1.500		1.126	1.499			**xxxx18701125MB**
1.250	1.500		1.251	1.499	X	X	**xxxx12501250MB**
1.250	1.625		1.251	1.624	X	X	**xxxx18701250MB**
1.250	1.750		1.251	1.749	X	X	**xxxx25001250MB**
1.250	1.875		1.252	1.873	X	X	**xxxx31201250MB**
1.250	2.000		1.252	1.998	X		**xxxx37501250MB**
1.312	1.812		1.313	1.811	X		**xxxx25001312MB**
1.375	1.625		1.376	1.624	X		**xxxx12501375MB**
1.375	1.750		1.376	1.749	X	X	**xxxx18701375MB**
1.375	1.875		1.376	1.874	X	X	**xxxx25001375MB**
1.375	2.000		1.377	1.998	X		**xxxx31201375MB**
1.500	1.750		1.501	1.749	X		**xxxx12501500MB**
1.500	1.875		1.501	1.874	X	X	**xxxx18701500MB**
1.500	2.000		1.501	1.999	X		**xxxx25001500MB**
1.500	2.125		1.502	2.123	X		**xxxx31201500MB**
1.500	2.250		1.502	2.248	X	X	**xxxx37501500MB**
1.625	2.000		1.626	1.999	X	X	**xxxx18701625MB**
1.625	2.250		1.627	2.248	X		**xxxx31201625MB**
1.625	2.375		1.627	2.373	X	X	**xxxx37501625MB**
1.750	2.250		1.751	2.249	X	X	**xxxx25001750MB**
1.750	2.375		1.752	2.373	X	X	**xxxx31201750MB**
1.750	2.500		1.752	2.498	X		**xxxx37501750MB**
1.875	2.250		1.876	2.249	X	X	**xxxx18701875MB**
1.875	2.500		1.877	2.498	X		**xxxx31201875MB**
1.875	2.625		1.877	2.623	X	X	**xxxx37501875MB**
2.000	2.500		2.001	2.499	X	X	**xxxx25002000MB**
2.000	2.625		2.002	2.623	X		**xxxx31202000MB**

* If used with wear rings, refer to wear ring throat diameter, see Section 9.
** If used with wear rings, refer to wear ring piston diameter, see Section 9.

Parker Hannifin Corporation
Engineered Polymer Systems Division
Phone: 801 972 3000

Table 10-4. MB Gland Dimensions — Inch (Continued) (All dimensions are reference)

A	B	C	D	E	Material		Part Number
Rod Diameter	(Rod) Groove Diameter	(Rod) Groove Width	Throat Diameter*				
(Piston) Groove Diameter	Bore Diameter	Groove Width		Piston Diameter**	4617	4652	
2.000	2.750	Add to gland width the corresponding value from Table 10-3.	2.002	2.748	X	X	**xxxx37502000MB**
2.000	3.000		2.002	2.998	X		**xxxx50002000MB**
2.125	2.500		2.126	2.499	X	X	**xxxx18702125MB**
2.250	2.750		2.251	2.749	X	X	**xxxx25002250MB**
2.250	2.875		2.252	2.873	X		**xxxx31202250MB**
2.250	3.000		2.252	2.998	X		**xxxx37502250MB**
2.250	3.250		2.252	3.248	X		**xxxx50002250MB**
2.375	3.000		2.377	2.998	X		**xxxx31202375MB**
2.375	3.125		2.377	3.123	X		**xxxx37502375MB**
2.500	2.875		2.501	2.874	X		**xxxx18702500MB**
2.500	3.000		2.501	2.999	X	X	**xxxx25002500MB**
2.500	3.125		2.502	3.123	X		**xxxx31202500MB**
2.500	3.250		2.502	3.248	X		**xxxx37502500MB**
2.500	3.500		2.502	3.498	X		**xxxx50002500MB**
2.500	3.750		2.503	3.747	X		**xxxx62502500MB**
2.625	3.000		2.626	2.999	X		**xxxx18702625MB**
2.625	3.125		2.626	3.124	X		**xxxx25002625MB**
2.625	3.375		2.627	3.373	X		**xxxx37502625MB**
2.750	3.125		2.751	3.124	X		**xxxx18702750MB**
2.750	3.250		2.751	3.249	X	X	**xxxx25002750MB**
2.750	3.500		2.752	3.498	X	X	**xxxx37502750MB**
2.750	4.000		2.753	3.997	X		**xxxx62502750MB**
2.875	3.375		2.876	3.374	X		**xxxx25002875MB**
3.000	3.375		3.001	3.374	X	X	**xxxx18703000MB**
3.000	3.500		3.001	3.499	X	X	**xxxx25003000MB**
3.000	3.625		3.002	3.623	X		**xxxx31203000MB**
3.000	3.750		3.002	3.748	X	X	**xxxx37503000MB**
3.000	4.000		3.002	3.998	X		**xxxx50003000MB**
3.000	4.250		3.003	4.247	X		**xxxx62503000MB**
3.125	3.500		3.126	3.499	X	X	**xxxx18703125MB**
3.125	3.625		3.126	3.624		X	**xxxx25003125MB**
3.125	3.875		3.127	3.873	X		**xxxx37503125MB**
3.250	3.625		3.251	3.624	X		**xxxx18703250MB**
3.250	3.750		3.251	3.749	X	X	**xxxx25003250MB**
3.250	4.000		3.252	3.998	X		**xxxx37503250MB**
3.250	4.500		3.253	4.497	X		**xxxx62503250MB**
3.375	4.125		3.377	4.123	X		**xxxx37503375MB**
3.500	3.875		3.501	3.874	X	X	**xxxx18703500MB**
3.500	4.000		3.501	3.999	X	X	**xxxx25003500MB**
3.500	4.125		3.502	4.123	X	X	**xxxx31203500MB**
3.500	4.250		3.502	4.248	X	X	**xxxx37503500MB**
3.500	4.500		3.502	4.498	X		**xxxx50003500MB**
3.625	4.000		3.626	3.999	X	X	**xxxx18703625MB**
3.750	4.250		3.751	4.249	X	X	**xxxx25003750MB**
3.750	4.375		3.752	4.373	X		**xxxx31203750MB**
3.750	4.500		3.752	4.498	X	X	**xxxx37503750MB**

* If used with wear rings, refer to wear ring throat diameter, see Section 9.
** If used with wear rings, refer to wear ring piston diameter, see Section 9.

Parker Hannifin Corporation
Engineered Polymer Systems Division
Phone: 801 972 3000

Table 10-4. MB Gland Dimensions — Inch (Continued) (All dimensions are reference)

A	B	C	D	E	Material		Part Number
Rod Diameter	(Rod) Groove Diameter	(Rod) Groove Width	Throat Diameter*				
(Piston) Groove Diameter	Bore Diameter	Groove Width		Piston Diameter**	4617	4652	
4.000	4.375	Add to gland width the corresponding value from Table 10-3.	4.001	4.374		X	xxxx18704000MB
4.000	4.500		4.001	4.499	X	X	xxxx25004000MB
4.000	4.750		4.002	4.748	X		xxxx37504000MB
4.000	5.000		4.002	4.998	X		xxxx50004000MB
4.250	4.750		4.251	4.749	X		xxxx25004250MB
4.250	5.000		4.252	4.998	X	X	xxxx37504250MB
4.375	4.750		4.376	4.749	X		xxxx18704375MB
4.375	5.000		4.377	4.998	X		xxxx31204375MB
4.375	5.125		4.377	5.123	X		xxxx37504375MB
4.500	5.000		4.501	4.999	X	X	xxxx25004500MB
4.500	5.125		4.502	5.123	X	X	xxxx31204500MB
4.500	5.500		4.502	5.498	X		xxxx50004500MB
4.750	5.500		4.752	5.498	X	X	xxxx37504750MB
4.875	5.625		4.877	5.623	X		xxxx37504875MB
5.000	5.500		5.001	5.499	X	X	xxxx25005000MB
5.000	5.750		5.002	5.748	X	X	xxxx37505000MB
5.000	6.000		5.002	5.998	X	X	xxxx50005000MB
5.250	5.750		5.251	5.749	X		xxxx25005250MB
5.250	6.000		5.252	5.998	X	X	xxxx37505250MB
5.250	6.250		5.252	6.248	X	X	xxxx50005250MB
5.375	6.000		5.377	5.998	X		xxxx31205375MB
5.375	6.125		5.377	6.123	X		xxxx37505375MB
5.500	6.000		5.501	5.999	X	X	xxxx25005500MB
5.500	6.250		5.502	6.248	X	X	xxxx37505500MB
5.500	6.500		5.502	6.498	X	X	xxxx50005500MB
5.750	6.250		5.751	6.249		X	xxxx25005750MB
5.875	6.625		5.877	6.623	X	X	xxxx37505875MB
6.000	6.500		6.001	6.499	X	X	xxxx25006000MB
6.000	6.750		6.002	6.748	X	X	xxxx37506000MB
6.000	7.000		6.002	6.998	X		xxxx50006000MB
6.250	7.000		6.252	6.998	X	X	xxxx37506250MB
6.500	7.250		6.502	7.248	X	X	xxxx37506500MB
6.500	7.500		6.502	7.498	X	X	xxxx50006500MB
6.500	8.000		6.503	7.997	X		xxxx75006500MB
6.750	7.750		6.752	7.748	X		xxxx50006750MB
7.000	7.750		7.002	7.748	X	X	xxxx37507000MB
7.000	8.000		7.002	7.998	X	X	xxxx50007000MB
7.000	8.250		7.003	8.247	X		xxxx62507000MB
7.250	8.000		7.252	7.998	X	X	xxxx37507250MB
7.500	8.000		7.501	7.999	X	X	xxxx25007500MB
7.500	8.250		7.502	8.248	X		xxxx37507500MB
7.500	9.000		7.503	8.997	X		xxxx75007500MB
7.750	8.250		7.751	8.249	X		xxxx25007750MB
7.750	8.500		7.752	8.498	X		xxxx37507750MB
8.000	8.625		8.002	8.623	X		xxxx31208000MB
8.000	9.000		8.002	8.998	X		xxxx50008000MB

* If used with wear rings, refer to wear ring throat diameter, see Section 9.
** If used with wear rings, refer to wear ring piston diameter, see Section 9.

Parker Hannifin Corporation
Engineered Polymer Systems Division
Phone: 801 972 3000

Table 10-4. MB Gland Dimensions — Inch (Continued) (All dimensions are reference)

A	B	C	D	E	Material		Part Number
Rod Diameter	(Rod) Groove Diameter	(Rod) Groove Width	Throat Diameter*				
(Piston) Groove Diameter	Bore Diameter	Groove Width		Piston Diameter**	4617	4652	
8.500	9.500	Add to gland width the corresponding value from Table 10-3.	8.502	9.498	X	X	**xxxx50008500MB**
9.000	9.750		9.002	9.748	X	X	**xxxx37509000MB**
9.000	10.000		9.002	9.998	X	X	**xxxx50009000MB**
9.250	10.000		9.252	9.998	X	X	**xxxx37509250MB**
9.500	10.500		9.502	10.498	X		**xxxx50009500MB**
9.750	10.500		9.752	10.498	X		**xxxx37509750MB**
9.875	10.875		9.877	10.873	X		**xxxx50009875MB**
10.000	10.500		10.001	10.499	X		**xxxx25010000MB**
10.000	10.750		10.002	10.748	X		**xxxx37510000MB**
10.000	11.000		10.002	10.998	X		**xxxx50010000MB**
10.500	11.250		10.502	11.248	X		**xxxx37510500MB**
10.500	11.500		10.502	11.498	X	X	**xxxx50010500MB**
11.000	11.750		11.002	11.748	X		**xxxx37511000MB**
11.000	12.000		11.002	11.998		X	**xxxx50011000MB**
11.250	12.000		11.252	11.998	X		**xxxx37511250MB**
11.500	12.500		11.502	12.498	X	X	**xxxx50011500MB**
12.000	13.000		12.002	12.998	X	X	**xxxx50012000MB**
12.750	14.000		12.753	13.997	X		**xxxx62512750MB**
13.000	13.500		13.001	13.499	X	X	**xxxx25011750MB**
13.500	14.500		13.502	14.498	X	X	**xxxx50013500MB**
14.000	14.500		14.001	14.499		X	**xxxx25012000MB**
15.000	16.000		15.002	15.998	X	X	**xxxx50015000MB**
17.000	18.000		17.002	17.998	X		**xxxx50017000MB**
17.750	19.000		17.753	18.997		X	**xxxx62517750MB**
19.000	20.000		19.002	19.998	X		**xxxx50019000MB**
21.000	22.000		21.002	21.998	X	X	**xxxx50021000MB**
29.000	30.000		29.002	29.998	X		**xxxx50029000MB**

* If used with wear rings, refer to wear ring throat diameter, see Section 9.
** If used with wear rings, refer to wear ring piston diameter, see Section 9.

NOTE: For sizes larger than those shown in the table, please contact your local Parker Seal representative.

Parker Hannifin Corporation
Engineered Polymer Systems Division
Phone: 801 972 3000

Back-up Ring 8700 Profile

8700 Profile, Low Profile Modular Back-up for PolyPaks and U-cups

8700 back-ups provide added extrusion resistance to u-cups and PolyPaks with only minimal increase in gland width. This profile of back-ups was originally designed to dramatically increase the pressure rating of rubber u-cups in situations where temperature or fluid compatibility prevent the use of urethane seals. As such, 8700 back-ups share a part numbering system very similar to many of our rubber u-cup profiles for easy matching of components. Additionally, they are perfect for adding heavy duty pressure capabilities to medium duty urethane sealing systems.

Technical Data

Standard Materials*	Temperature	Max. Pressure Range**
Z4651D60	-65°F to 275°F (-54°C to 135°C)	7,000 psi (482 bar)
Z4729D65	-65°F to 275°F (-54°C to 135°C)	7,000 psi (482 bar)

***Alternate Materials:** For applications that may require an alternate material, please contact your local Parker Seal representative.

** 4,900 psi (337 bar) with tight-tolerance wear rings.
3,500 psi (241 bar) with standard-tolerance wear rings.

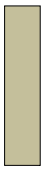

8700 Cross-Section

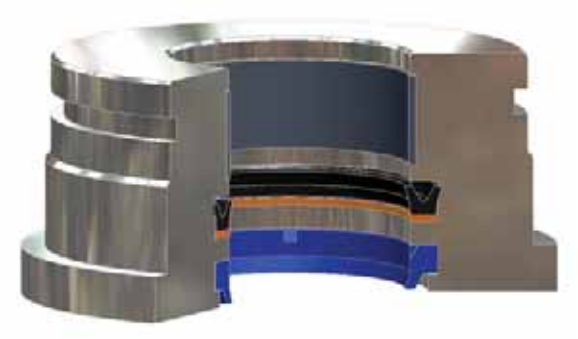

8700 installed in Rod Gland

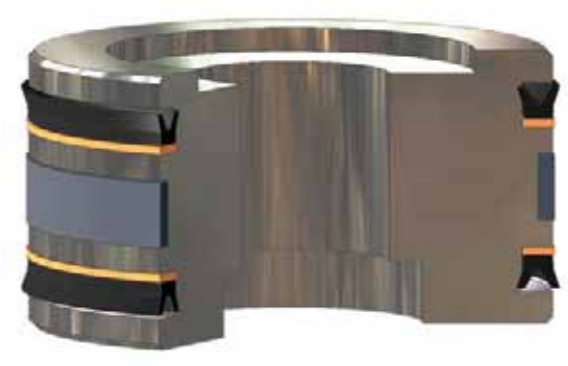

8700 installed in Piston Gland

Parker Hannifin Corporation
Engineered Polymer Systems Division
Phone: 801 972 3000

Part Number Nomenclature — 8700 Profile

Table 10-5. 8700 Profile — Inch

4	6	5	1	87	0	8	0	2	0	0	0	$KIVE
Seal Compound 4-Digit Material Code Example: 4651 = PolyMyte 4729 = Hytrel				Profile	Cross-Section (XX/32") Example: 08 = 1/4"		Nominal Part I.D. (x1000) Example: 2.000" I.D. x 1000 = 02000					Split option available $KIVE = Bevel

Gland Dimensions — 8700 Profile

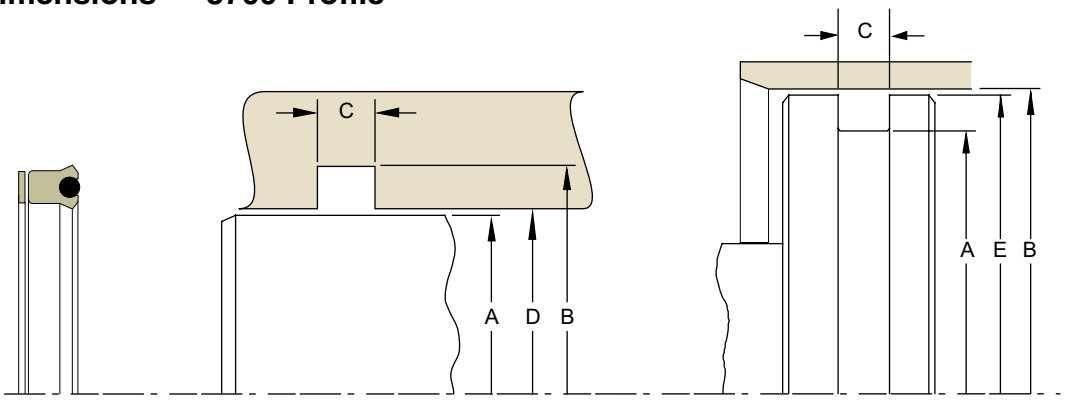

Please refer to Engineering Section 2, page 2-8 for surface finish and additional hardware considerations.

Table 10-6. 8700 Gland Dimensions (Standard) — Inch6

A	B	C	D	E		Part Number		
Rod Diameter	(Rod) Groove Diameter	(Rod) Groove Width	(Rod) Throat Diameter*					
(Bore) Groove Diameter	Bore Diameter	(Bore) Groove Width		(Bore) Piston Diameter**	Radial Cross Section	Compound Code	Profile Code	
0.375	0.625	Add .062" to seal groove width	0.376	0.624	0.1250	XXXX	87	0400375
0.500	0.750		0.501	0.749	0.1250	XXXX	87	0400500
0.625	0.875		0.626	0.874	0.1250	XXXX	87	0400625
0.750	1.000		0.751	0.999	0.1250	XXXX	87	0400750
1.000	1.250		1.001	1.249	0.1250	XXXX	87	0401000
1.000	1.312		1.001	1.311	0.1560	XXXX	87	0501000
1.187	1.500		1.188	1.499	0.1565	XXXX	87	0501187
1.250	1.625		1.251	1.624	0.1875	XXXX	87	0601250
1.250	1.750		1.251	1.749	0.2500	XXXX	87	0801250
1.375	1.687		1.376	1.686	0.1560	XXXX	87	0501375
1.375	1.750		1.377	1.749	0.1875	XXXX	87	0601375
1.500	1.812		1.501	1.811	0.1560	XXXX	87	0501500
1.500	1.875		1.502	1.874	0.1875	XXXX	87	0601500
1.500	2.250		1.501	2.249	0.2500	XXXX	87	0801500
1.625	2.000		1.627	1.999	0.1875	XXXX	87	0601625
1.750	2.125		1.752	2.124	0.1875	XXXX	87	0601750

*If used with wear rings, refer to wear ring throat diameter, see Section 9.
**If used with wear rings, refer to wear ring piston diameter, see Section 9.

Parker Hannifin Corporation
Engineered Polymer Systems Division
Phone: 801 972 3000

Table 10-6. 8700 Gland Dimensions — Inch (Continued)

A	B	C	D	E		Part Number		
Rod Diameter	(Rod) Groove Diameter	(Rod) Groove Width	(Rod) Throat Diameter*					
(Bore) Groove Diameter	Bore Diameter	(Bore) Groove Width		(Bore) Piston Diameter**	Radial Cross Section	Compound Code	Profile Code	
2.000	2.375	Add .062" to seal groove width	2.002	2.374	0.1875	**XXXX**	**87**	**0602000**
2.000	2.500		2.001	2.499	0.2500	**XXXX**	**87**	**0802000**
2.125	2.500		2.127	2.499	0.1875	**XXXX**	**87**	**0602125**
2.500	2.937		2.501	2.936	0.2185	**XXXX**	**87**	**0702500**
2.812	3.250		2.813	3.249	0.2190	**XXXX**	**87**	**0702812**
3.000	3.437		3.001	3.436	0.2185	**XXXX**	**87**	**0703000**
3.062	3.500		3.063	3.499	0.2190	**XXXX**	**87**	**0703062**
3.250	3.750		3.251	3.749	0.2500	**XXXX**	**87**	**0803250**
3.500	4.000		3.501	3.999	0.2500	**XXXX**	**87**	**0803500**
3.750	4.250		3.751	4.249	0.2500	**XXXX**	**87**	**0803750**
4.000	4.500		4.001	4.499	0.2500	**XXXX**	**87**	**0804000**
4.500	5.000		4.501	4.999	0.2500	**XXXX**	**87**	**0804500**
5.000	5.562		5.001	5.561	0.2810	**XXXX**	**87**	**0905000**
5.375	6.000		5.377	5.998	0.3125	**XXXX**	**87**	**1005375**
5.375	6.125		5.377	6.123	0.3750	**XXXX**	**87**	**1205375**
5.437	6.000		5.438	5.999	0.2815	**XXXX**	**87**	**0905437**
5.500	6.125		5.502	6.123	0.3125	**XXXX**	**87**	**1005500**
6.375	7.000		6.377	6.998	0.3125	**XXXX**	**87**	**1006375**
6.437	7.000		6.438	6.999	0.2815	**XXXX**	**87**	**0906437**
7.000	7.625		7.002	7.623	0.3125	**XXXX**	**87**	**1007000**
7.375	8.000		7.377	7.998	0.3125	**XXXX**	**87**	**1007375**
8.500	9.125		8.502	9.123	0.3125	**XXXX**	**87**	**1008500**
10.000	10.750		10.002	10.748	0.3750	**XXXX**	**87**	**1210000**
11.000	12.000		11.002	11.998	0.5000	**XXXX**	**87**	**1611000**
11.250	12.000		11.252	11.998	0.3750	**XXXX**	**87**	**1211250**

*If used with wear rings, refer to wear ring throat diameter, see Section 9.
**If used with wear rings, refer to wear ring piston diameter, see Section 9.

NOTE: For sizes larger than those shown in the table, please contact your local Parker Seal representative.

Parker Hannifin Corporation
Engineered Polymer Systems Division
Phone: 801 972 3000

Back-up Ring
5100 Profile

5100 Profile (5100 Series), O-ring Groove Back-up

Parker's 5100 Series back-up rings offer extrusion resistance up to 7,000 psi for dynamic applications and up to 20,000 psi for static applications. They are physically interchangeable with most existing o-ring back-ups. Our easy to identify orange colored 4651 PolyMyte material used with this profile, provides outstanding extrusion resistance when compared to hard nitrile back-ups plus offers extended fluid compatibility. 5100 Series back-ups are designed to meet standard industrial o-ring groove dimensions for single or dual back-up groove designs and will always install in the proper direction.

Note: For custom tolerances for rod or piston application, please contact your Parker Seal representative.

Technical Data

Standard Materials*	Temperature	Max. Pressure Range Dynamic**	Static
Z4651D60	-65°F to 275°F (-54°C to 135°C)	7,000 psi (482 bar)	20,000 psi (1,379 bar)
Z4729D65	-65°F to 275°F (-54°C to 135°C	7,000 psi (482 bar)	20,000 psi (1,379 bar)

***Alternate Materials:** For applications that may require an alternate material, please contact your local Parker Seal representative.

** 4,900 psi (337 bar) with tight-tolerance wear rings.
3,500 psi (241 bar) with standard-tolerance wear rings.

5100 Cross-Section

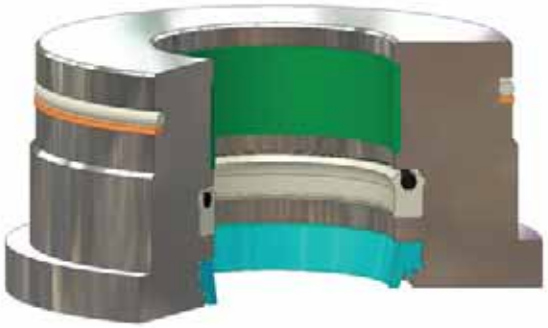

5100 installed in Rod Gland

Parker Hannifin Corporation
Engineered Polymer Systems Division
Phone: 801 972 3000

Part Number Nomenclature — 5100 Profile

Table 10-7. 5100 Profile — Inch

4	6	5	1	51	-	3	4	1	$KIVE
Seal Compound 4-Digit Material Code Example: 4651 = PolyMyte				Profile		O-ring Dash Number (2-XXX) Example: -341 = 2-341 O-ring Equivalent			Split option available $KIVE = Bevel

Gland Dimensions — 5100 Profile

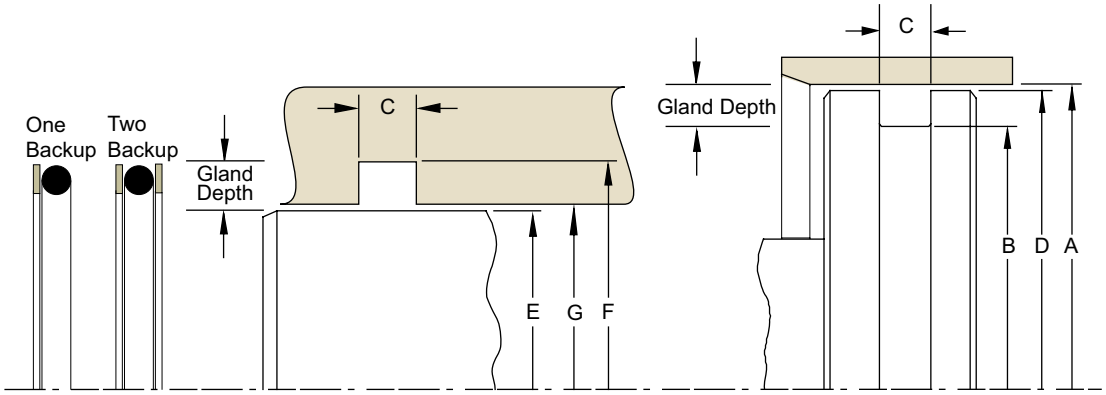

Please refer to Engineering Section 2, page 2-8 for surface finish and additional hardware considerations.

Table 10-8. 5100 Gland Dimensions (Standard) — Inch

	O-ring 2-Size AS568A-	Tooled	Piston			Rod			Groove Width	
			A Bore Diameter +.002/-.000	B Groove Diameter +.000/-.002	D Piston Diameter** +.000/-.001	E Rod Diameter +.002/.000	F Groove Diameter +.002/.000	G Throat Diameter* +.001/-.000	C1 One Back-up +.005/.000	C2 Two Back-up +.005/-.000
Recommended for Dynamic	006	X	0.249	0.139	0.247	0.124	0.234	0.126	0.138	0.205
	007		0.280	0.170	0.278	0.155	0.265	0.157	0.138	0.205
	008	X	0.311	0.201	0.309	0.186	0.296	0.188	0.138	0.205
	009	X	0.343	0.233	0.341	0.218	0.328	0.220	0.138	0.205
	010	X	0.374	0.264	0.372	0.249	0.359	0.251	0.138	0.205
	011	X	0.436	0.326	0.434	0.311	0.421	0.313	0.138	0.205
	012	X	0.499	0.389	0.497	0.374	0.484	0.376	0.138	0.205
Not Recommended for Dynamic	013	X	0.561	0.451	0.559	0.436	0.546	0.439	0.138	0.205
	014	X	0.624	0.514	0.622	0.499	0.609	0.501	0.138	0.205
	015	X	0.686	0.576	0.684	0.561	0.671	0.564	0.138	0.205
	016	X	0.749	0.639	0.747	0.624	0.734	0.626	0.138	0.205
	017	X	0.811	0.701	0.809	0.686	0.796	0.689	0.138	0.205
	018	X	0.874	0.764	0.872	0.749	0.856	0.751	0.138	0.205
	019	X	0.936	0.826	0.934	0.811	0.921	0.814	0.138	0.205
	020	X	0.999	0.889	0.997	0.874	0.984	0.876	0.138	0.205
	021	X	1.061	0.951	1.059	0.936	1.046	0.939	0.138	0.205
	022	X	1.124	1.014	1.122	0.999	1.109	1.001	0.138	0.205
	023	X	1.186	1.076	1.184	1.061	1.171	1.064	0.138	0.205

*If used with wear rings, refer to wear ring throat diameter, see Section 9.
**If used with wear rings, refer to wear ring piston diameter, see Section 9.

Those Piston O.D.'s shown in darker shading may cause the back-up to exceed its ability to recover from stretching. If so, select a material with greater elongation or use a two piece piston.

Parker Hannifin Corporation
Engineered Polymer Systems Division
Phone: 801 972 3000

Table 10-8. 5100 Gland Dimensions — Inch (Continued)

	O-ring 2-Size AS568A-	Tooled	Piston			Rod			Groove Width	
			A Bore Diameter +.002/-.000	B Groove Diameter +.000/-.002	D Piston Diameter** +.000/-.001	E Rod Diameter +.002/.000	F Groove Diameter +.002/.000	G Throat Diameter* +.001/-.000	C1 One Back-up +.005/.000	C2 Two Back-up +.005/-.000
Not Recommended for Dynamic	024	X	1.249	1.139	1.247	1.124	1.234	1.126	0.138	0.205
	025	X	1.311	1.201	1.309	1.186	1.296	1.189	0.138	0.205
	026	X	1.374	1.264	1.372	1.249	1.359	1.251	0.138	0.205
	027	X	1.436	1.326	1.434	1.311	1.421	1.313	0.138	0.205
	028	X	1.499	1.389	1.497	1.374	1.484	1.376	0.138	0.205
	029		1.624	1.514	1.622	1.499	1.609	1.501	0.138	0.205
	030		1.749	1.639	1.747	1.624	1.734	1.626	0.138	0.205
	031	X	1.874	1.764	1.872	1.749	1.859	1.751	0.138	0.205
	032		1.999	1.889	1.997	1.874	1.984	1.876	0.138	0.205
	033	X	2.124	2.014	2.122	1.999	2.109	2.001	0.138	0.205
	034		2.249	2.139	2.247	2.124	2.234	2.126	0.138	0.205
	035		2.374	2.264	2.372	2.249	2.359	2.251	0.138	0.205
	036	X	2.499	2.389	2.497	2.374	2.484	2.376	0.138	0.205
	037		2.624	2.514	2.622	2.499	2.609	2.501	0.138	0.205
	038		2.749	2.639	2.747	2.624	2.734	2.626	0.138	0.205
	039		2.874	2.764	2.872	2.749	2.859	2.751	0.138	0.205
	040	X	2.999	2.889	2.997	2.874	2.984	2.876	0.138	0.205
	041		3.124	3.014	3.122	2.999	3.109	3.001	0.138	0.205
	042		3.374	3.264	3.372	3.249	3.359	3.251	0.138	0.205
	043	X	3.874	3.764	3.872	3.749	3.590	3.751	0.138	0.205
Recommended for Dynamic	104		0.312	0.136	0.310	0.124	0.300	0.126	0.171	0.238
	105		0.343	0.167	0.341	0.155	0.331	0.157	0.171	0.238
	106		0.374	0.198	0.372	0.186	0.362	0.188	0.171	0.238
	107		0.406	0.230	0.404	0.218	0.394	0.220	0.171	0.238
	108		0.437	0.261	0.435	0.249	0.425	0.251	0.171	0.238
	109		0.499	0.323	0.497	0.311	0.487	0.313	0.171	0.238
	110	X	0.562	0.386	0.560	0.374	0.550	0.376	0.171	0.238
	111	X	0.624	0.448	0.622	0.436	0.612	0.438	0.171	0.238
	112	X	0.687	0.511	0.685	0.499	0.675	0.501	0.171	0.238
	113	X	0.749	0.573	0.747	0.561	0.737	0.563	0.171	0.238
	114	X	0.812	0.636	0.810	0.624	0.800	0.626	0.171	0.238
	115	X	0.874	0.698	0.872	0.686	0.862	0.688	0.171	0.238
	116	X	0.937	0.761	0.935	0.749	0.925	0.751	0.171	0.238
Not Recommended for Dynamic	117	X	0.999	0.823	0.997	0.811	0.987	0.814	0.171	0.238
	118	X	1.062	0.886	1.060	0.874	1.050	0.876	0.171	0.238
	119	X	1.124	0.948	1.122	0.936	1.112	0.939	0.171	0.238
	120	X	1.187	1.011	1.185	0.999	1.175	1.001	0.171	0.238
	121	X	1.249	1.073	1.247	1.061	1.237	1.063	0.171	0.238
	122	X	1.312	1.136	1.310	1.124	1.300	1.126	0.171	0.238
	123	X	1.374	1.198	1.372	1.186	1.362	1.188	0.171	0.238
	124	X	1.437	1.261	1.435	1.249	1.425	1.251	0.171	0.238
	125	X	1.499	1.323	1.497	1.311	1.487	1.313	0.171	0.238
	126	X	1.562	1.386	1.560	1.374	1.550	1.376	0.171	0.238
	127	X	1.624	1.448	1.622	1.436	1.612	1.438	0.171	0.238
	128	X	1.687	1.511	1.685	1.499	1.675	1.501	0.171	0.238
	129	X	1.749	1.573	1.747	1.561	1.737	1.563	0.171	0.238

*If used with wear rings, refer to wear ring throat diameter, see Section 9.
**If used with wear rings, refer to wear ring piston diameter, see Section 9.

Those Piston O.D.'s shown in darker shading may cause the back-up to exceed its ability to recover from stretching. If so, select a material with greater elongation or use a two piece piston.

Parker Hannifin Corporation
Engineered Polymer Systems Division
Phone: 801 972 3000

Table 10-8. 5100 Gland Dimensions — Inch (Continued)

	O-ring 2-Size AS568A-	Tooled	Piston			Rod			Groove Width	
			A Bore Diameter +.002/-.000	B Groove Diameter +.000/-.002	D Piston Diameter** +.000/-.001	E Rod Diameter +.002/.000	F Groove Diameter +.002/.000	G Throat Diameter* +.001/-.000	C1 One Back-up +.005/.000	C2 Two Back-up +.005/-.000
Not Recommended for Dynamic	130		1.812	1.636	1.810	1.624	1.800	1.626	0.171	0.238
	131	X	1.874	1.698	1.872	1.686	1.862	1.688	0.171	0.238
	132	X	1.937	1.761	1.935	1.749	1.925	1.751	0.171	0.238
	133	X	1.999	1.823	1.997	1.811	1.987	1.813	0.171	0.238
	134		2.062	1.886	2.060	1.874	2.050	1.876	0.171	0.238
	135		2.124	1.948	2.122	1.936	2.112	1.938	0.171	0.238
	136		2.187	2.011	2.185	1.999	2.175	2.001	0.171	0.238
	137	X	2.249	2.073	2.247	2.061	2.237	2.063	0.171	0.238
	138		2.312	2.136	2.310	2.124	2.300	2.126	0.171	0.238
	139		2.374	2.198	2.372	2.186	2.362	2.188	0.171	0.238
	140		2.437	2.261	2.435	2.249	2.425	2.251	0.171	0.238
	141	X	2.499	2.323	2.497	2.311	2.487	2.313	0.171	0.238
	142	X	2.562	2.386	2.560	2.374	2.550	2.376	0.171	0.238
	143	X	2.624	2.448	2.622	2.436	2.612	2.438	0.171	0.238
	144	X	2.687	2.511	2.685	2.499	2.675	2.501	0.171	0.238
	145		2.749	2.573	2.747	2.561	2.737	2.563	0.171	0.238
	146		2.812	2.636	2.810	2.624	2.800	2.626	0.171	0.238
	147		2.874	2.698	2.872	2.686	2.862	2.688	0.171	0.238
	148		2.937	2.761	2.935	2.749	2.925	2.751	0.171	0.238
	149	X	2.999	2.823	2.997	2.811	2.987	2.813	0.171	0.238
Recommended for Dynamic	201		0.437	0.195	0.434	0.185	0.427	0.188	0.208	0.275
	202		0.500	0.258	0.497	0.248	0.490	0.251	0.208	0.275
	203		0.562	0.320	0.559	0.310	0.552	0.313	0.208	0.275
	204		0.625	0.383	0.622	0.373	0.615	0.376	0.208	0.275
	205		0.687	0.445	0.684	0.435	0.677	0.438	0.208	0.275
	206	X	0.750	0.508	0.747	0.498	0.740	0.501	0.208	0.275
	207		0.812	0.570	0.809	0.560	0.802	0.563	0.208	0.275
	208		0.875	0.633	0.872	0.623	0.865	0.626	0.208	0.275
	209	X	0.937	0.695	0.934	0.685	0.927	0.688	0.208	0.275
	210	X	1.000	0.758	0.997	0.748	0.990	0.751	0.208	0.275
	211	X	1.062	0.820	1.059	0.810	1.052	0.813	0.208	0.275
	212	X	1.125	0.883	1.122	0.873	1.115	0.876	0.208	0.275
	213	X	1.187	0.945	1.184	0.935	1.177	0.938	0.208	0.275
	214	X	1.250	1.008	1.247	0.998	1.240	1.001	0.208	0.275
	215	X	1.312	1.070	1.309	1.060	1.302	1.063	0.208	0.275
	216	X	1.375	1.133	1.372	1.123	1.365	1.126	0.208	0.275
	217	X	1.437	1.195	1.434	1.185	1.427	1.188	0.208	0.275
	218	X	1.500	1.258	1.497	1.248	1.490	1.251	0.208	0.275
	219		1.562	1.320	1.559	1.310	1.552	1.313	0.208	0.275
	220	X	1.625	1.383	1.622	1.373	1.615	1.376	0.208	0.275
	221	X	1.687	1.445	1.684	1.435	1.677	1.438	0.208	0.275
	222	X	1.750	1.508	1.747	1.498	1.740	1.501	0.208	0.275

*If used with wear rings, refer to wear ring throat diameter, see Section 9.
**If used with wear rings, refer to wear ring piston diameter, see Section 9.

Those Piston O.D.'s shown in darker shading may cause the back-up to exceed its ability to recover from stretching. If so, select a material with greater elongation or use a two piece piston.

Parker Hannifin Corporation
Engineered Polymer Systems Division
Phone: 801 972 3000

Table 10-8. 5100 Gland Dimensions — Inch (Continued)

	O-ring 2-Size AS568A-	Tooled	Piston			Rod			Groove Width	
			A Bore Diameter +.002/-.000	B Groove Diameter +.000/-.002	D Piston Diameter** +.000/-.001	E Rod Diameter +.002/.000	F Groove Diameter +.002/.000	G Throat Diameter* +.001/-.000	C1 One Back-up +.005/.000	C2 Two Back-up +.005/-.000
Not Recommended for Dynamic	**223**	X	1.875	1.633	1.872	1.623	1.865	1.626	0.208	0.275
	224	X	2.000	1.758	1.997	1.748	1.990	1.751	0.208	0.275
	225	X	2.125	1.883	2.122	1.873	2.115	2.876	0.208	0.275
	226	X	2.250	2.008	2.247	1.998	2.240	2.001	0.208	0.275
	227	X	2.375	2.133	2.372	2.123	2.365	2.126	0.208	0.275
	228	X	2.500	2.258	2.497	2.248	2.490	2.501	0.208	0.275
	229	X	2.625	2.383	2.622	2.373	2.615	2.376	0.208	0.275
	230	X	2.750	2.508	2.747	2.498	2.740	2.501	0.208	0.275
	231	X	2.875	2.633	2.872	2.623	2.865	2.626	0.208	0.275
	232	X	3.000	2.758	2.997	2.748	2.990	2.751	0.208	0.275
	233	X	3.125	2.883	3.122	2.873	3.115	2.876	0.208	0.275
	234	X	3.250	3.008	3.247	2.998	3.240	3.001	0.208	0.275
	235		3.375	3.133	3.372	3.123	3.365	3.126	0.208	0.275
	236	X	3.500	3.258	3.497	3.248	3.490	3.251	0.208	0.275
	237	X	3.625	3.383	3.622	3.373	3.615	3.376	0.208	0.275
	238	X	3.750	3.508	3.747	3.498	3.740	3.501	0.208	0.275
	239		3.875	3.633	3.872	3.623	3.865	3.626	0.208	0.275
	240	X	4.000	3.758	3.997	3.748	3.990	3.751	0.208	0.275
	241		4.125	3.883	4.122	3.873	4.115	3.876	0.208	0.275
	242	X	4.250	4.008	4.247	3.998	4.240	4.001	0.208	0.275
	243		4.375	4.133	4.372	4.123	4.365	4.126	0.208	0.275
	244	X	4.500	4.258	4.497	4.248	4.490	4.251	0.208	0.275
	245	X	4.625	4.383	4.622	4.373	4.615	4.376	0.208	0.275
	246	X	4.750	4.508	4.747	4.498	4.740	4.501	0.208	0.275
	247	X	4.875	4.633	4.872	4.623	4.865	4.626	0.208	0.275
	248	X	5.000	4.758	4.997	4.748	4.990	4.751	0.208	0.275
	249		5.125	4.883	5.122	4.873	5.115	4.876	0.208	0.275
	250	X	5.250	5.008	5.247	4.998	5.240	5.001	0.208	0.275
	251		5.375	5.133	5.372	5.123	5.365	5.126	0.208	0.275
	252	X	5.500	5.258	5.497	5.248	5.490	5.251	0.208	0.275
	253		5.625	5.383	5.622	5.373	5.615	5.376	0.208	0.275
	254		5.750	5.508	5.747	5.498	5.740	5.501	0.208	0.275
	255		5.875	5.633	5.872	5.623	5.865	5.626	0.208	0.275
	256	X	6.000	5.758	5.997	5.748	5.990	5.751	0.208	0.275
	257		6.125	5.883	6.122	5.873	6.115	5.876	0.208	0.275
	258	X	6.250	6.008	6.247	5.998	6.240	6.001	0.208	0.275
	259		6.500	6.258	6.497	6.248	6.490	6.251	0.208	0.275
	260		6.750	6.508	6.747	6.498	6.740	6.501	0.208	0.275
	261		7.000	6.758	6.997	6.748	6.990	6.751	0.208	0.275
	262		7.250	7.008	7.247	6.998	7.240	7.001	0.208	0.275
	263		7.500	7.258	7.497	7.248	7.490	7.251	0.208	0.275
	264	X	7.750	7.508	7.747	7.498	7.740	7.501	0.208	0.275
	265	X	8.000	7.758	7.997	7.748	7.990	7.751	0.208	0.275
	277	X	11.750	11.508	11.747	11.498	11.740	11.501	0.208	0.275

*If used with wear rings, refer to wear ring throat diameter, see Section 9.
**If used with wear rings, refer to wear ring piston diameter, see Section 9.

Those Piston O.D.'s shown in darker shading may cause the back-up to exceed its ability to recover from stretching. If so, select a material with greater elongation or use a two piece piston.

Parker Hannifin Corporation
Engineered Polymer Systems Division
Phone: 801 972 3000

Table 10-8. 5100 Gland Dimensions — Inch (Continued)

	O-ring 2-Size AS568A-	Tooled	Piston			Rod			Groove Width	
			A Bore Diameter +.002/-.000	B Groove Diameter +.000/-.002	D Piston Diameter** +.000/-.001	E Rod Diameter +.002/.000	F Groove Diameter +.002/.000	G Throat Diameter* +.001/-.000	C1 One Back-up +.005/.000	C2 Two Back-up +.005/-.000
Recommended for Dynamic	309	X	0.812	0.442	0.809	0.435	0.805	0.438	0.311	0.410
	310	X	0.875	0.505	0.872	0.498	0.868	0.501	0.311	0.410
	311		0.937	0.567	0.934	0.560	0.930	0.563	0.311	0.410
	312		1.000	0.630	0.997	0.623	0.993	0.626	0.311	0.410
	313		1.062	0.692	1.059	0.685	1.055	0.688	0.311	0.410
	314	X	1.125	0.755	1.122	0.748	1.118	0.751	0.311	0.410
	315		1.187	0.817	1.184	0.810	1.180	0.813	0.311	0.410
	316	X	1.250	0.880	1.247	0.873	1.243	0.876	0.311	0.410
Recommended for Dynamic	317		1.312	0.942	1.309	0.935	1.305	0.938	0.311	0.410
	318	X	1.375	1.005	1.372	0.998	1.368	1.001	0.311	0.410
	319		1.437	1.067	1.434	1.060	1.430	1.063	0.311	0.410
	320		1.500	1.130	1.497	1.123	1.493	1.126	0.311	0.410
	321		1.562	1.192	1.559	1.185	1.555	1.188	0.311	0.410
	322	X	1.625	1.255	1.622	1.248	1.618	1.251	0.311	0.410
	323		1.687	1.317	1.684	1.310	1.680	1.313	0.311	0.410
	324		1.750	1.380	1.747	1.373	1.743	1.376	0.311	0.410
	325	X	1.875	1.505	1.872	1.498	1.868	1.501	0.311	0.410
	326	X	2.000	1.630	1.997	1.623	1.993	1.626	0.311	0.410
	327	X	2.125	1.755	2.122	1.748	2.118	1.751	0.311	0.410
	328	X	2.250	1.880	2.247	1.873	2.243	1.876	0.311	0.410
	329	X	2.375	2.005	2.372	1.998	2.368	2.001	0.311	0.410
	330	X	2.500	2.130	2.497	2.123	2.493	2.126	0.311	0.410
	331	X	2.625	2.255	2.622	2.248	2.618	2.251	0.311	0.410
	332	X	2.750	2.380	2.747	2.373	2.743	2.376	0.311	0.410
	333	X	2.875	2.505	2.872	2.498	2.868	2.501	0.311	0.410
	334	X	3.000	2.630	2.997	2.623	2.993	2.626	0.311	0.410
	335	X	3.125	2.755	3.122	2.748	3.118	2.751	0.311	0.410
	336	X	3.250	2.880	3.247	2.873	3.243	2.876	0.311	0.410
	337	X	3.375	3.005	3.372	2.998	3.368	3.001	0.311	0.410
	338	X	3.500	3.130	3.497	3.123	3.493	3.126	0.311	0.410
	339	X	3.625	3.255	3.622	3.248	3.618	3.251	0.311	0.410
	340	X	3.750	3.380	3.747	3.373	3.743	3.376	0.311	0.410
	341	X	3.875	3.505	3.872	3.498	3.868	3.501	0.311	0.410
	342	X	4.000	3.630	3.997	3.623	3.993	3.626	0.311	0.410
	343	X	4.125	3.755	4.122	3.748	4.118	3.751	0.311	0.410
	344	X	4.250	3.880	4.247	3.873	4.243	3.876	0.311	0.410
	345	X	4.375	4.005	4.372	3.998	4.368	4.001	0.311	0.410
	346	X	4.500	4.130	4.497	4.123	4.493	4.126	0.311	0.410
	347	X	4.625	4.255	4.622	4.248	4.618	4.251	0.311	0.410
	348	X	4.750	4.380	4.747	4.373	4.743	4.376	0.311	0.410
	349	X	4.875	4.505	4.872	4.498	4.868	4.501	0.311	0.410

*If used with wear rings, refer to wear ring throat diameter, see Section 9.
**If used with wear rings, refer to wear ring piston diameter, see Section 9.

Those Piston O.D.'s shown in darker shading may cause the back-up to exceed its ability to recover from stretching. If so, select a material with greater elongation or use a two piece piston.

Parker Hannifin Corporation
Engineered Polymer Systems Division
Phone: 801 972 3000

Table 10-8. 5100 Gland Dimensions — Inch (Continued)

	O-ring 2-Size AS568A-	Tooled	Piston			Rod			Groove Width	
			A Bore Diameter +.002/-.000	B Groove Diameter +.000/-.002	D Piston Diameter** +.000/-.001	E Rod Diameter +.002/.000	F Groove Diameter +.002/.000	G Throat Diameter* +.001/-.000	C1 One Back-up +.005/.000	C2 Two Back-up +.005/-.000
Not Recommended for Dynamic	350		5.000	4.630	4.997	4.623	4.993	4.626	0.311	0.410
	351		5.125	4.755	5.122	4.748	5.118	4.751	0.311	0.410
	352	X	5.250	4.880	5.247	4.873	5.243	4.876	0.311	0.410
	353		5.375	5.005	5.372	4.998	5.368	5.001	0.311	0.410
	354	X	5.500	5.130	5.497	5.123	5.493	5.126	0.311	0.410
	355		5.625	5.255	5.622	5.248	5.618	5.251	0.311	0.410
	356		5.750	5.380	5.747	5.373	5.743	5.376	0.311	0.410
	357		5.875	5.505	5.872	5.498	5.868	5.501	0.311	0.410
	358	X	6.000	5.630	5.997	5.623	5.993	5.626	0.311	0.410
	359		6.125	5.755	6.122	5.748	6.118	5.751	0.311	0.410
	360		6.250	5.880	6.247	5.873	6.243	5.876	0.311	0.410
	361	X	6.375	6.005	6.372	5.998	6.368	6.001	0.311	0.410
Recommended for Dynamic	425	X	5.002	4.528	4.998	4.497	4.971	4.501	0.408	0.538
	426		5.127	4.653	5.123	4.622	5.096	4.626	0.408	0.538
	427		5.252	4.778	5.248	4.747	5.221	4.751	0.408	0.538
	428		5.377	4.903	5.373	4.872	5.346	4.876	0.408	0.538
	429	X	5.502	5.028	5.498	4.997	5.471	5.001	0.408	0.538
	430		5.627	5.153	5.623	5.122	5.596	5.126	0.408	0.538
	431		5.752	5.278	5.748	5.247	5.721	5.251	0.408	0.538
	432	X	5.877	5.403	5.873	5.372	5.846	5.376	0.408	0.538
	433	X	6.002	5.528	5.998	5.497	5.971	5.501	0.408	0.538
	434		6.127	5.653	6.123	5.622	6.096	5.626	0.408	0.538
	435		6.252	5.778	6.248	5.747	6.221	5.751	0.408	0.538
	436		6.377	5.903	6.373	5.872	6.346	5.876	0.408	0.538
	437	X	6.502	6.028	6.498	5.997	6.471	6.001	0.408	0.538
	438		6.752	6.278	6.748	6.247	6.721	6.251	0.408	0.538
	439	X	7.002	6.528	6.998	6.497	6.971	6.501	0.408	0.538
	440		7.252	6.778	7.248	6.747	7.221	6.751	0.408	0.538
	441		7.502	7.028	7.498	6.997	7.471	7.001	0.408	0.538
	442		7.752	7.278	7.748	7.247	7.721	7.251	0.408	0.538
	443	X	8.002	7.528	7.998	7.497	7.971	7.501	0.408	0.538
	444		8.252	7.778	8.248	7.747	8.221	7.751	0.408	0.538
	445		8.502	8.028	8.498	7.997	8.471	8.001	0.408	0.538
	446	X	9.002	8.528	8.998	8.497	8.971	8.501	0.408	0.538
	447		9.502	9.028	9.498	8.997	9.471	9.001	0.408	0.538
	448		10.002	9.528	9.998	9.497	9.971	9.501	0.408	0.538
	449		10.502	10.028	10.498	9.997	10.471	10.001	0.408	0.538
	450		11.002	10.528	10.998	10.497	10.971	10.501	0.408	0.538
	451	X	11.502	11.028	11.498	10.997	11.471	11.001	0.408	0.538
	452		12.002	11.528	11.998	11.497	11.971	11.501	0.408	0.538
	453	X	12.502	12.028	12.498	11.997	12.471	12.001	0.408	0.538

*If used with wear rings, refer to wear ring throat diameter, see Section 9.
**If used with wear rings, refer to wear ring piston diameter, see Section 9.

Those Piston O.D.'s shown in darker shading may cause the back-up to exceed its ability to recover from stretching. If so, select a material with greater elongation or use a two piece piston.

Parker Hannifin Corporation
Engineered Polymer Systems Division
Phone: 801 972 3000

Table 10-8. 5100 Gland Dimensions — Inch (Continued)

	O-ring 2-Size AS568A-	Tooled	Piston			Rod			Groove Width	
			A Bore Diameter +.002/-.000	B Groove Diameter +.000/-.002	D Piston Diameter** +.000/-.001	E Rod Diameter +.002/.000	F Groove Diameter +.002/.000	G Throat Diameter* +.001/-.000	C1 One Back-up +.005/.000	C2 Two Back-up +.005/-.000
Recommended for Dynamic	454		13.002	12.528	12.998	12.497	12.971	12.501	0.408	0.538
	455		13.502	13.028	13.498	12.997	13.471	13.001	0.408	0.538
	456		14.002	13.528	13.998	13.497	13.971	13.501	0.408	0.538
	457		14.502	14.028	14.498	13.997	14.471	14.001	0.408	0.538
	458		15.002	14.528	14.998	14.497	14.971	14.501	0.408	0.538
	459		15.502	15.028	15.498	14.997	15.471	15.001	0.408	0.538
	460		16.002	15.528	15.998	15.497	15.971	15.501	0.408	0.538
Not Recommended for Dynamic	461		16.502	16.028	16.498	15.997	16.471	16.001	0.408	0.538
	462		17.002	16.528	16.998	16.497	16.971	16.501	0.408	0.538
	463		17.502	17.028	17.498	16.997	17.471	17.001	0.408	0.538
	464		18.002	17.528	17.998	17.497	17.971	17.501	0.408	0.538
	465		18.502	18.028	18.498	17.997	18.471	18.001	0.408	0.538
	466	X	19.002	18.528	18.998	18.497	18.971	18.501	0.408	0.538
	467		19.502	19.028	19.498	18.997	19.471	19.001	0.408	0.538
	468		20.002	19.528	19.998	19.497	19.971	19.501	0.408	0.538
	469		20.502	20.028	20.498	19.997	20.471	20.001	0.408	0.538
	470		21.502	21.028	21.498	20.997	21.471	21.001	0.408	0.538
	471		22.502	22.028	22.498	21.997	22.471	22.001	0.408	0.538
	472	X	23.502	23.028	23.498	22.997	23.471	23.001	0.408	0.538
	473		24.502	24.028	24.498	23.997	24.471	24.001	0.408	0.538
	474		25.502	25.028	25.498	24.997	25.471	25.001	0.408	0.538
	475	X	26.502	26.028	26.498	25.997	26.471	26.001	0.408	0.538

*If used with wear rings, refer to wear ring throat diameter, see Section 9.
**If used with wear rings, refer to wear ring piston diameter, see Section 9.

Those Piston O.D.'s shown in darker shading may cause the back-up to exceed its ability to recover from stretching. If so, select a material with greater elongation or use a two piece piston.

NOTE: For sizes larger than those shown in the table, please contact your local Parker Seal representative.

Parker Hannifin Corporation
Engineered Polymer Systems Division
Phone: 801 972 3000

Back-up Ring
PAB Profile

Positively-Actuated Cross-Section

PAB Profile, Positively-Actuated Back-up

While modular back-ups require an increase in groove width to be incorporated into the sealing system, because they are integrated with the seal positively-actuated back-ups do not change the required axial groove width. For many profiles, these back-ups can provide the ultimate extrusion resistance while retaining the seal's original groove dimensions. While the most common material used to manufacture positively-actuated back-ups is nylon, it is not uncommon to see applications that require materials such as UltraCOMP, PTFE or polyacetal.

Due to the nature of this product line and the design relationship between the back-up and the seal, parts are sold only as part of an assembly that includes the seal design best suited to the application.

Positively-actuated back-ups can be incorporated into profiles such as the BPP and BD. Tooling may be required.

Technical Data

Standard Materials*	Temperature	Max. Pressure Range**
Rod		
R0 (Virgin PTFE)	-65°F to 250°F (-54°C to 121°C)	5,000 psi (344 bar)
R1 (Nylatron)	-20°F to 250°F (-29°C to 121°C)	3,000 psi (206 bar)
R12 (PEEK)	-65°F to 500°F (-54°C to 260°C)	10,000 psi (689 bar)
Piston		
P0 (Virgin PTFE)	-65°F to 250°F (-54°C to 121°C)	5,000 psi (344 bar)
P1 (Nylatron)	-20°F to 250°F (-29°C to 121°C)	3,000 psi (206 bar)
P12 (PEEK)	-65°F to 500°F (-54°C to 260°C)	10,000 psi (689 bar)

* **Alternate Materials:** For applications that may require an alternate material, please contact your local Parker Seal representative.

** 7,000 psi (482 bar) with tight-tolerance wear rings. 5,000 psi (344 bar) with standard-tolerance wear rings.

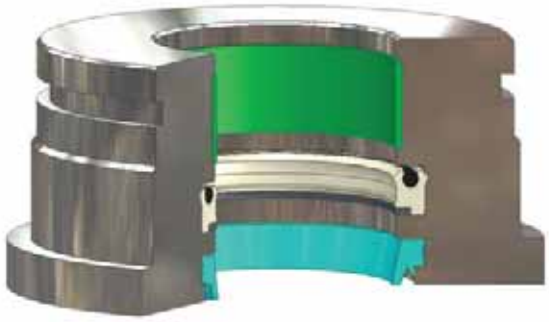

Positively-Actuated installed in Rod Gland

Positively-Actuated installed in Piston Gland

Parker Hannifin Corporation
Engineered Polymer Systems Division
Phone: 801 972 3000

Back-up Ring
PDB Profile

PDB Profile, PTFE Modular Back-up

PDB back-ups are PTFE anti-extrusion rings. The PDBA and PDBB profiles are designed to retrofit MIL Spec grooves used in commercial applications. PDBA styles are split rings retrofitting MS28774 designs, while PDBB styles are solid rings retrofitting MS27595 designs. Due to the fact that these profiles are designed to commercial grooves, MIL Spec certifications are not available. Although the standard material is virgin PTFE, any of Parker's available PTFE blends can be used.

Technical Data

Standard

Materials*	Temperature	Max. Pressure Range
0100 Virgin PTFE	-425°F to 450°F (-254°C to 232°C)	1,500 psi (103 bar) dynamic 4,500 psi (310 bar) static

***Alternate Materials:** For applications that may require an alternate material, please see Section 3 (Table 3-7) for alternate PTFE materials.

PDB Cross-Section

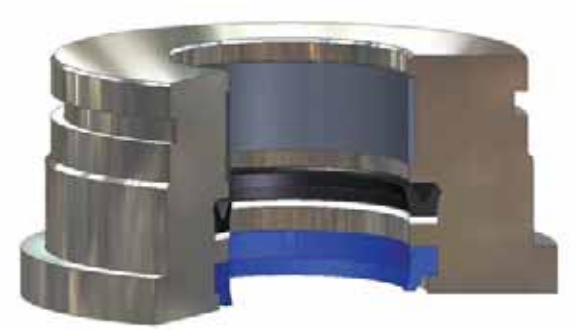

PDB installed in Rod Gland

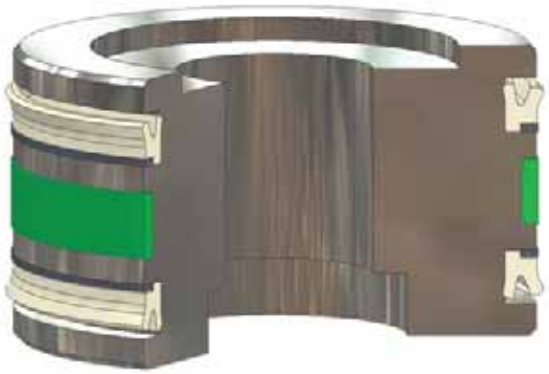

PDB installed in Piston Gland

Parker Hannifin Corporation
Engineered Polymer Systems Division
Phone: 801 972 3000

Part Number Nomenclature — PDBA Profile

Table 10-9. PDBA Profile — Inch

Seal Compound
4-Digit Material Code
Example: 0100 = Virgin PTFE

Profile

MS28774 Dash Code
Example: 124 = 1.270" I.D.

Gland Dimensions — PDBA Profile

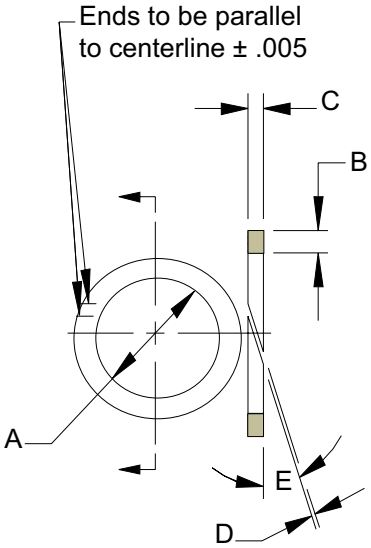

Please refer to Engineering Section 2, page 2-8 for surface finish and additional hardware considerations.

Table 10-10. PDBA Gland Dimensions — Inch

Dash Number MS28774	Seal Dimensions				
	A Inside Diameter	B Radial Cross-Section	C Width	D Split Gap	E Split Angle Degree
	+.001/ -.001				
004	0.109	.052/.054	.045/.052	.000/.005	39
005	0.124	.052/.054	.045/.052	.000/.005	33
006	0.140	.052/.054	.045/.052	.000/.005	30
007	0.171	.052/.054	.045/.052	.000/.005	26
008	0.202	.052/.054	.045/.052	.000/.005	22
009	0.234	.052/.054	.045/.052	.000/.005	22
010	0.265	.052/.054	.045/.052	.000/.005	22
011	0.327	.052/.054	.045/.052	.000/.005	22
012	0.390	.052/.054	.045/.052	.000/.005	22
013	0.455	.052/.054	.045/.052	.000/.005	22
014	0.518	.052/.054	.045/.052	.000/.005	22
015	0.580	.052/.054	.045/.052	.000/.005	22
016	0.643	.052/.054	.045/.052	.000/.005	22
017	0.705	.052/.054	.045/.052	.000/.005	22
018	0.768	.052/.054	.045/.052	.000/.005	22
019	0.830	.052/.054	.045/.052	.000/.005	22
020	0.898	.052/.054	.045/.052	.000/.005	22
021	0.960	.052/.054	.045/.052	.000/.005	22

NOTE: Measure Split Gap using a Mandrel with "A" Diameter.

Dash Number MS28774	Seal Dimensions				
	A Inside Diameter	B Radial Cross-Section	C Width	D Split Gap	E Split Angle Degree
	+.001/ -.001				
022	1.023	.052/.054	.045/.052	.000/.005	22
023	1.085	.052/.054	.045/.052	.000/.005	22
024	1.148	.052/.054	.045/.052	.000/.005	22
025	1.210	.052/.054	.045/.052	.000/.005	22
026	1.273	.052/.054	.045/.052	.000/.005	22
027	1.335	.052/.054	.045/.052	.000/.005	22
028	1.398	.052/.054	.045/.052	.000/.005	22
110	0.390	.085/.087	.045/.052	.000/.006	22
111	0.452	.085/.087	.045/.052	.000/.006	22
112	0.515	.085/.087	.045/.052	.000/.006	22
113	0.577	.085/.087	.045/.052	.000/.006	22
114	0.640	.085/.087	.045/.052	.000/.006	22
115	0.702	.085/.087	.045/.052	.000/.006	22
116	0.765	.085/.087	.045/.052	.000/.006	22
117	0.832	.085/.087	.045/.052	.000/.006	22
118	0.895	.085/.087	.045/.052	.000/.006	22
119	0.957	.085/.087	.045/.052	.000/.006	22
120	1.020	.085/.087	.045/.052	.000/.006	22

NOTE: Measure Split Gap using a Mandrel with "A" Diameter.

Parker Hannifin Corporation
Engineered Polymer Systems Division
Phone: 801 972 3000

Table 10-10. PDBA Gland Dimensions — Inch (Continued)

Dash Number MS28774	Seal Dimensions				
	A Inside Diameter	B Radial Cross-Section	C Width	D Split Gap	E Split Angle Degree
	+.001/ -.001				
121	1.082	.085/.087	.045/.052	.000/.006	22
122	1.145	.085/.087	.045/.052	.000/.006	22
123	1.207	.085/.087	.045/.052	.000/.006	22
124	1.270	.085/.087	.045/.052	.000/.006	22
125	1.332	.085/.087	.045/.052	.000/.006	22
126	1.397	.085/.087	.045/.052	.000/.006	22
127	1.459	.085/.087	.045/.052	.000/.006	22
128	1.522	.085/.087	.045/.052	.000/.006	22
129	1.584	.085/.087	.045/.052	.000/.006	22
130	1.647	.085/.087	.045/.052	.000/.006	22
131	1.709	.085/.087	.045/.052	.000/.006	22
132	1.772	.085/.087	.045/.052	.000/.006	22
133	1.934	.085/.087	.045/.052	.000/.006	22
134	1.897	.085/.087	.045/.052	.000/.006	22
135	1.959	.085/.087	.045/.052	.000/.006	22
136	2.022	.085/.087	.045/.052	.000/.006	22
137	2.084	.085/.087	.045/.052	.000/.006	22
138	2.147	.085/.087	.045/.052	.000/.006	22
139	2.209	.085/.087	.045/.052	.000/.006	22
140	2.258	.085/.087	.045/.052	.000/.006	22
141	2.320	.085/.087	.045/.052	.000/.006	22
142	2.383	.085/.087	.045/.052	.000/.006	22
143	2.445	.085/.087	.045/.052	.000/.006	22
144	2.508	.085/.087	.045/.052	.000/.006	22
145	2.570	.085/.087	.045/.052	.000/.006	22
146	2.633	.085/.087	.045/.052	.000/.006	22
147	2.695	.085/.087	.045/.052	.000/.006	22
148	2.758	.085/.087	.045/.052	.000/.006	22
149	2.820	.085/.087	.045/.052	.000/.006	22
210	0.766	.118/.120	.045/.052	.000/.006	22
211	0.828	.118/.120	.045/.052	.000/.006	22
212	0.891	.118/.120	.045/.052	.000/.006	22
213	0.953	.118/.120	.045/.052	.000/.006	22
214	1.016	.118/.120	.045/.052	.000/.006	22
215	1.078	.118/.120	.045/.052	.000/.006	22
216	1.141	.118/.120	.045/.052	.000/.006	22
217	1.203	.118/.120	.045/.052	.000/.006	22
218	1.266	.118/.120	.045/.052	.000/.006	22
219	1.344	.118/.120	.045/.052	.000/.006	22
220	1.397	.118/.120	.045/.052	.000/.006	22
221	1.459	.118/.120	.045/.052	.000/.006	22
222	1.522	.118/.120	.045/.052	.000/.006	22
223	1.647	.118/.120	.045/.052	.000/.007	22
224	1.772	.118/.120	.045/.052	.000/.007	22
225	1.897	.118/.120	.045/.052	.000/.007	22
226	2.022	.118/.120	.045/.052	.000/.007	22

NOTE: Measure Split Gap using a Mandrel with "A" Diameter.

Dash Number MS28774	Seal Dimensions				
	A Inside Diameter	B Radial Cross-Section	C Width	D Split Gap	E Split Angle Degree
	+.001/ -.001				
227	2.147	.118/.120	.045/.052	.000/.007	22
228	2.272	.118/.120	.045/.052	.000/.007	22
229	2.397	.118/.120	.045/.052	.000/.007	22
230	2.522	.118/.120	.045/.052	.000/.007	22
231	2.631	.118/.120	.045/.052	.000/.007	22
232	2.756	.118/.120	.045/.052	.000/.007	22
233	2.881	.118/.120	.045/.052	.000/.007	22
234	3.006	.118/.120	.045/.052	.000/.007	22
235	3.131	.118/.120	.045/.052	.000/.007	22
236	3.256	.118/.120	.045/.052	.000/.007	22
237	3.381	.118/.120	.045/.052	.000/.007	22
238	3.506	.118/.120	.045/.052	.000/.007	22
239	3.631	.118/.120	.045/.052	.000/.007	22
240	3.756	.118/.120	.045/.052	.000/.007	22
241	3.881	.118/.120	.045/.052	.000/.007	22
242	4.006	.118/.120	.045/.052	.000/.007	22
243	4.131	.118/.120	.045/.052	.000/.007	22
244	4.256	.118/.120	.045/.052	.000/.007	22
245	4.381	.118/.120	.045/.052	.000/.007	22
246	4.506	.118/.120	.045/.052	.000/.007	22
247	4.631	.118/.120	.045/.052	.000/.007	22
325	1.513	.182/.184	.065/.075	.000/.007	22
326	1.638	.182/.184	.065/.075	.000/.007	22
327	1.763	.182/.184	.065/.075	.000/.007	22
328	1.888	.182/.184	.065/.075	.000/.007	22
329	2.013	.182/.184	.065/.075	.000/.007	22
330	2.138	.182/.184	.065/.075	.000/.007	22
331	2.268	.182/.184	.065/.075	.000/.007	22
332	2.393	.182/.184	.065/.075	.000/.007	22
333	2.518	.182/.184	.065/.075	.000/.007	22
334	2.643	.182/.184	.065/.075	.000/.007	22
335	2.768	.182/.184	.065/.075	.000/.007	22
336	2.893	.182/.184	.065/.075	.000/.007	22
337	3.018	.182/.184	.065/.075	.000/.007	22
338	3.143	.182/.184	.065/.075	.000/.007	22
339	3.273	.182/.184	.065/.075	.000/.007	22
340	3.398	.182/.184	.065/.075	.000/.007	22
341	3.523	.182/.184	.065/.075	.000/.007	22
342	3.648	.182/.184	.065/.075	.000/.007	22
343	3.773	.182/.184	.065/.075	.000/.007	22
344	3.898	.182/.184	.065/.075	.000/.007	22
345	4.028	.182/.184	.065/.075	.000/.007	22
346	4.153	.182/.184	.065/.075	.000/.007	22
347	4.278	.182/.184	.065/.075	.000/.007	22
348	4.403	.182/.184	.065/.075	.000/.007	22
349	4.528	.182/.184	.065/.075	.000/.007	22

NOTE: Measure Split Gap using a Mandrel with "A" Diameter.

Parker Hannifin Corporation
Engineered Polymer Systems Division
Phone: 801 972 3000

Table 10-10. PDBA Gland Dimensions — Inch (Continued)

Dash Number MS28774	Seal Dimensions				
	A Inside Diameter	B Radial Cross-Section	C Width	D Split Gap	E Split Angle Degree
	+.001/ -.001				
425	4.551	.235/.237	.106/.110	.000/.008	22
426	4.676	.235/.237	.106/.110	.000/.008	22
427	4.801	.235/.237	.106/.110	.000/.008	22
428	4.926	.235/.237	.106/.110	.000/.008	22
429	5.051	.235/.237	.106/.110	.000/.008	22
430	5.176	.235/.237	.106/.110	.000/.008	22
431	5.301	.235/.237	.106/.110	.000/.008	22
432	5.426	.235/.237	.106/.110	.000/.008	22
433	5.551	.235/.237	.106/.110	.000/.008	22
434	5.676	.235/.237	.106/.110	.000/.008	22
435	5.801	.235/.237	.106/.110	.000/.008	22
436	5.926	.235/.237	.106/.110	.000/.008	22
437	6.051	.235/.237	.106/.110	.000/.008	22
438	6.274	.235/.237	.106/.110	.000/.008	22
439	6.524	.235/.237	.106/.110	.000/.008	22
440	6.774	.235/.237	.106/.110	.000/.008	22
441	7.024	.235/.237	.106/.110	.000/.008	22
442	7.274	.235/.237	.106/.110	.000/.008	22

NOTE: Measure Split Gap using a Mandrel with “A” Diameter.

Dash Number MS28774	Seal Dimensions				
	A Inside Diameter	B Radial Cross-Section	C Width	D Split Gap	E Split Angle Degree
	+.001/ -.001				
443	7.524	.235/.237	.106/.110	.000/.008	22
444	7.774	.235/.237	.106/.110	.000/.008	22
445	8.024	.235/.237	.106/.110	.000/.008	22
446	8.524	.235/.237	.106/.110	.000/.008	22
447	9.024	.235/.237	.106/.110	.000/.008	22
448	9.524	.235/.237	.106/.110	.000/.008	22
449	10.024	.235/.237	.106/.110	.000/.008	22
450	10.524	.235/.237	.106/.110	.000/.008	22
451	11.024	.235/.237	.106/.110	.000/.008	22
452	11.524	.235/.237	.106/.110	.000/.008	22
453	12.024	.235/.237	.106/.110	.000/.008	22
454	12.524	.235/.237	.106/.110	.000/.008	22
455	13.024	.235/.237	.106/.110	.000/.008	22
456	13.524	.235/.237	.106/.110	.000/.008	22
457	14.024	.235/.237	.106/.110	.000/.008	22
458	14.524	.235/.237	.106/.110	.000/.008	22
459	15.024	.235/.237	.106/.110	.000/.008	22
460	15.524	.235/.237	.106/.110	.000/.008	22

NOTE: Measure Split Gap using a Mandrel with “A” Diameter.

NOTE: For sizes larger than those shown in the table, please contact your local Parker Seal representative.

Parker Hannifin Corporation
Engineered Polymer Systems Division
Phone: 801 972 3000

Part Number Nomenclature — PDBB Profile

Table 10-11. PDBB Profile — Inch

Seal Compound
4-Digit Material Code
Example: 100 = Virgin PTFE

Profile

MS27595 Dash Code
Example: 232 = 2.756" I.D.

Gland Dimensions — PDBB Profile

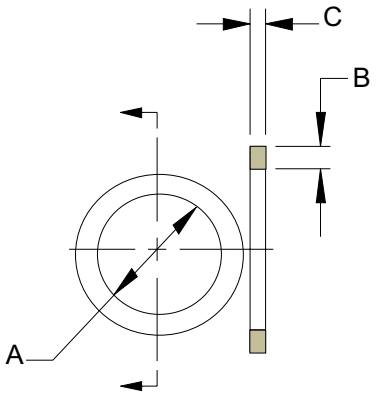

Please refer to Engineering Section 2, page 2-8 for surface finish and additional hardware considerations.

Table 10-12. PDBB Gland Dimensions — Inch

Dash Number MS27595	Seal Dimensions		
	A I.D.	B Radial Cross-Section	C Width
	+.001/ -.000		
004	0.080	.048/.052	.054/.056
005	0.111	.048/.052	.054/.056
006	0.125	.048/.052	.054/.056
007	0.156	.048/.052	.054/.056
008	0.187	.048/.052	.054/.056
009	0.219	.048/.052	.054/.056
010	0.250	.048/.052	.054/.056
011	0.312	.048/.052	.054/.056
012	0.375	.048/.052	.054/.056
013	0.440	.048/.052	.054/.056
014	0.503	.048/.052	.054/.056
015	0.565	.048/.052	.054/.056
016	0.628	.048/.052	.054/.056
017	0.690	.048/.052	.054/.056
018	0.753	.048/.052	.054/.056
019	0.815	.048/.052	.054/.056
020	0.881	.048/.052	.054/.056
	+.002/ -.002		
021	0.943	.048/.052	.054/.056
022	1.006	.048/.052	.054/.056
023	1.068	.048/.052	.054/.056
024	1.131	.048/.052	.054/.056
025	1.193	.048/.052	.054/.056

Dash Number MS27595	Seal Dimensions		
	A I.D.	B Radial Cross-Section	C Width
	+.002/ -.002		
026	1.256	.048/.052	.054/.056
027	1.318	.048/.052	.054/.056
028	1.381	.048/.052	.054/.056
	+.001/ -.002		
110	0.374	.048/.052	.087/.089
111	0.437	.048/.052	.087/.089
112	0.499	.048/.052	.087/.089
113	0.562	.048/.052	.087/.089
114	0.624	.048/.052	.087/.089
115	0.687	.048/.052	.087/.089
116	0.749	.048/.052	.087/.089
117	0.815	.048/.052	.087/.089
118	0.877	.048/.052	.087/.089
119	0.940	.048/.052	.087/.089
120	1.002	.048/.052	.087/.089
	+.002/ -.002		
121	1.065	.048/.052	.087/.089
122	1.127	.048/.052	.087/.089
123	1.190	.048/.052	.087/.089
124	1.252	.048/.052	.087/.089
125	1.315	.048/.052	.087/.089
126	1.377	.048/.052	.087/.089

Dash Number MS27595	Seal Dimensions		
	A I.D.	B Radial Cross-Section	C Width
	+.002/ -.002		
127	1.440	.048/.052	.087/.089
128	1.502	.048/.052	.087/.089
129	1.565	.048/.052	.087/.089
130	1.629	.048/.052	.087/.089
131	1.691	.048/.052	.087/.089
132	1.754	.048/.052	.087/.089
133	1.816	.048/.052	.087/.089
134	1.879	.048/.052	.087/.089
135	1.942	.048/.052	.087/.089
136	2.004	.048/.052	.087/.089
137	2.067	.048/.052	.087/.089
138	2.129	.048/.052	.087/.089
139	2.192	.048/.052	.087/.089
140	2.254	.048/.052	.087/.089
141	2.317	.048/.052	.087/.089
142	2.379	.048/.052	.087/.089
143	2.442	.048/.052	.087/.089
144	2.504	.048/.052	.087/.089
145	2.567	.048/.052	.087/.089
146	2.629	.048/.052	.087/.089
147	2.692	.048/.052	.087/.089
148	2.754	.048/.052	.087/.089
149	2.817	.048/.052	.087/.089

Parker Hannifin Corporation
Engineered Polymer Systems Division
Phone: 801 972 3000

Table 10-12. PDBB Gland Dimensions — Inch (Continued)

Dash Number MS27595	Seal Dimensions		
	A I.D.	B Radial Cross-Section	C Width
	+.001/ -.002		
210	0.753	.048/.052	.118/.120
211	0.815	.048/.052	.118/.120
212	0.878	.048/.052	.118/.120
213	0.940	.048/.052	.118/.120
214	1.003	.048/.052	.118/.120
215	1.065	.048/.052	.118/.120
216	1.128	.048/.052	.118/.120
217	1.190	.048/.052	.118/.120
218	1.253	.048/.052	.118/.120
219	1.315	.048/.052	.118/.120
220	1.378	.048/.052	.118/.120
221	1.440	.048/.052	.118/.120
222	1.503	.048/.052	.118/.120
223	1.629	.048/.052	.118/.120
224	1.754	.048/.052	.118/.120
225	1.880	.048/.052	.118/.120
226	2.005	.048/.052	.118/.120
227	2.130	.048/.052	.118/.120
228	2.255	.048/.052	.118/.120
229	2.380	.048/.052	.118/.120
230	2.505	.048/.052	.118/.120
231	2.630	.048/.052	.118/.120
232	2.755	.048/.052	.118/.120
233	2.880	.048/.052	.118/.120
234	3.005	.048/.052	.118/.120
235	3.130	.048/.052	.118/.120
236	3.255	.048/.052	.118/.120
237	3.380	.048/.052	.118/.120
238	3.505	.048/.052	.118/.120
239	3.630	.048/.052	.118/.120
240	3.755	.048/.052	.118/.120
241	3.880	.048/.052	.118/.120
242	4.005	.048/.052	.118/.120
243	4.130	.048/.052	.118/.120
244	4.255	.048/.052	.118/.120
245	4.380	.048/.052	.118/.120

Dash Number MS27595	Seal Dimensions		
	A I.D.	B Radial Cross-Section	C Width
	+.001/ -.002		
246	4.505	.048/.052	.118/.120
247	4.630	.048/.052	.118/.120
325	1.497	.071/.075	.184/.186
326	1.622	.071/.075	.184/.186
327	1.748	.071/.075	.184/.186
328	1.873	.071/.075	.184/.186
329	1.998	.071/.075	.184/.186
330	2.123	.071/.075	.184/.186
331	2.248	.071/.075	.184/.186
332	2.373	.071/.075	.184/.186
333	2.498	.071/.075	.184/.186
334	2.623	.071/.075	.184/.186
335	2.748	.071/.075	.184/.186
336	2.873	.071/.075	.184/.186
337	2.998	.071/.075	.184/.186
338	3.123	.071/.075	.184/.186
339	3.248	.071/.075	.184/.186
340	3.373	.071/.075	.184/.186
341	3.498	.071/.075	.184/.186
342	3.623	.071/.075	.184/.186
343	3.748	.071/.075	.184/.186
344	3.873	.071/.075	.184/.186
345	3.998	.071/.075	.184/.186
346	4.123	.071/.075	.184/.186
347	4.248	.071/.075	.184/.186
348	4.373	.071/.075	.184/.186
349	4.498	.071/.075	.184/.186
	+.002/ -.000		
425	4.502	.106/.110	.235/.237
426	4.627	.106/.110	.235/.237
427	4.752	.106/.110	.235/.237
428	4.877	.106/.110	.235/.237
429	5.002	.106/.110	.235/.237
430	5.127	.106/.110	.235/.237
431	5.252	.106/.110	.235/.237

Dash Number MS27595	Seal Dimensions		
	A I.D.	B Radial Cross-Section	C Width
	+.002/ -.000		
432	5.377	.106/.110	.235/.237
433	5.502	.106/.110	.235/.237
434	5.627	.106/.110	.235/.237
435	5.752	.106/.110	.235/.237
436	5.877	.106/.110	.235/.237
437	6.002	.106/.110	.235/.237
438	6.252	.106/.110	.235/.237
439	6.502	.106/.110	.235/.237
440	6.752	.106/.110	.235/.237
441	7.002	.106/.110	.235/.237
442	7.252	.106/.110	.235/.237
443	7.502	.106/.110	.235/.237
444	7.752	.106/.110	.235/.237
445	8.002	.106/.110	.235/.237
	+.003/ -.003		
446	8.502	.106/.110	.235/.237
447	9.002	.106/.110	.235/.237
448	9.502	.106/.110	.235/.237
449	10.002	.106/.110	.235/.237
450	10.502	.106/.110	.235/.237
	+.004/ -.004		
451	11.002	.106/.110	.235/.237
452	11.502	.106/.110	.235/.237
453	12.002	.106/.110	.235/.237
454	12.502	.106/.110	.235/.237
455	13.002	.106/.110	.235/.237
	+.005/ -.005		
456	13.502	.106/.110	.235/.237
457	14.002	.106/.110	.235/.237
458	14.502	.106/.110	.235/.237
459	15.002	.106/.110	.235/.237
460	15.502	.106/.110	.235/.237

NOTE: For sizes larger than those shown in the table, please contact your local Parker Seal representative.

Parker Hannifin Corporation
Engineered Polymer Systems Division
Phone: 801 972 3000

Notes

Parker Hannifin Corporation
Engineered Polymer Systems Division
Phone: 801 972 3000

Contents

Product Profiles
568 Resilon O-ring 11-2
HS Head Seal..... 11-15

Urethane O-rings & Head Seals

Parker offers many materials for fluid power applications that have unique advantages in comparison to traditional materials (see Section 3, Materials). Urethane based compounds such as Resilon used in AS568 style o-rings and P4700 used in urethane head seals exhibit these unique advantages including low compression set and excellent extrusion resistance.

Urethane O-rings

Parker urethane o-rings offer the material advantages exclusive to the Resilon family of compounds in standard and custom o-ring sizes. High temperature Resilon o-rings eliminates the need for back-ups, simplifying installation and reducing damage due to spiral failure.

Urethane Head Seals

The HS profile static head seals are ideal for replacing o-rings and back-ups in hydraulic cylinder heads. Installation can be simplified and failures due to pinching and blow-out eliminated. The characteristics offered by P4700 urethane provide the performance advantages for this profile.

Profiles

Table 11-1: Product Profiles

Series	Description	Application (Duty)				Page
		Light	Medium	Heavy	Pneumatic	
568	High Performance Urethane O-rings					11-2
HS 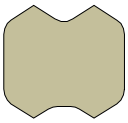	Static Head Seals					11-15

Parker Hannifin Corporation
Engineered Polymer Systems Division
Phone: 801 972 3000

Urethane O-ring 568 Profile

568 Cross Section

568 Profile, Resilon O-ring

Parker is pleased to offer the material advantages of the Resilon family of urethanes in standard o-ring sizes. The high extrusion resistance of 4300 and related compounds eliminates the need for a back-up in many hydraulic applications, thereby simplifying installation and reducing groove width. Resilon's unmatched temperature rating makes it suitable in applications where other urethanes fail. In addition, Resilon WR (4301) provides superior water resistance and compression set resistance in water-based fluids. Premium urethane o-rings are much less prone to spiral failure and installation damage compared with rubber o-rings. Dimensions and tolerances of Parker Resilon o-rings match up with AS568B specifications for diameter and cross-section and are used in the same grooves.

Technical Data

Standard Materials*	Temperature	Pressure
P4300A90	-65°F to 275°F (-54°C to 135°C)	5,000 psi (344 bar) dynamic 10,000 psi (688 bar) static
P4301A90	-65°F to 275°F (-54°C to 135°C)	5,000 psi (344 bar) dynamic 10,000 psi (688 bar) static

***Alternate Materials:** For applications that may require an alternate material, please contact your local Parker Seal representative.

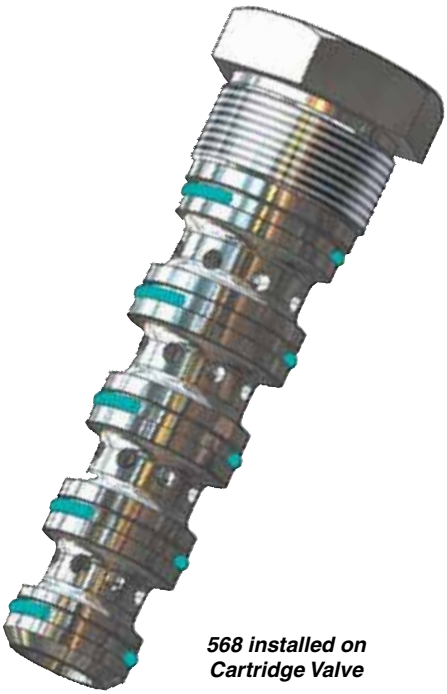

568 installed on Cartridge Valve

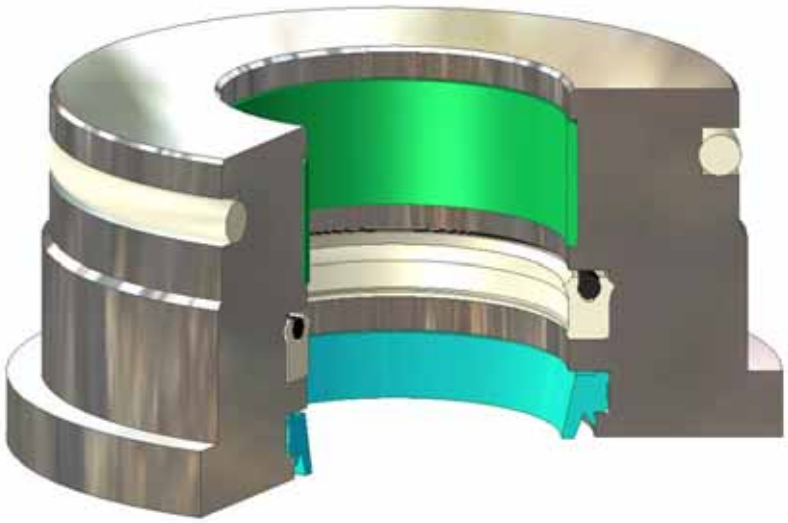

568 installed in Static Head Gland

Parker Hannifin Corporation
Engineered Polymer Systems Division
Phone: 801 972 3000

Part Number Nomenclature — 568 Profile

Table 11-2. 568 Profile — Inch

4	3	0	0	568	2	-	1	2	8

4 Digit Material Code
Example: 4300 = Resilon

Profile

AS568 O-ring Dash Number
Example: 2-128 = 1.487" I.D. x 0.103" CS

Gland Dimensions — 568 Profile — Dynamic

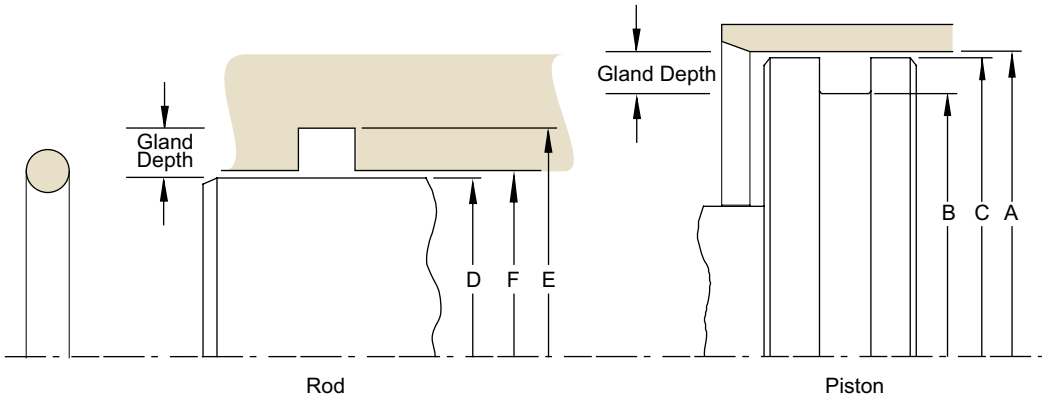

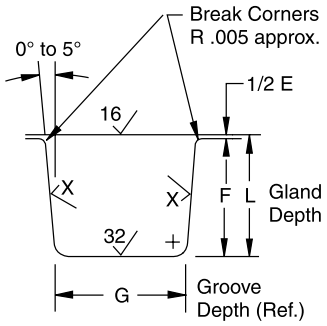

Dynamic Gland

Table 11-3. General O-ring Dimensional Data

O-ring 2-Size AS568	Cross Section		Dynamic			E Diametral Clearance (a)	G-Groove Width			R Groove Radius	Max. Eccentricity (b)
	Nominal	Actual	L Gland Depth	Squeeze Actual	Squeeze %		0 Back-up Ring (G)	1 Back-up Ring (G)	2 Back-up Ring (G)		
004 to 050	1/16	.070 ±.003	.055 to .057	.010 to .018	15 to 25	.002 to .005	.093 to .098	.138 to .143	.205 to .210	.005 to .015	.002
102 through 178	3/32	.103 ±.003	.088 to .090	.01 to .018	10 to 17	.002 to .005	.140 to .145	.171 to .176	.238 to .243	.005 to .015	.002
201 through 284	1/8	.139 ±.004	.121 to .123	.012 to .022	9 to 16	.003 to .006	.187 to .192	.208 to .213	.275 to .280	.010 to .025	.003
309 through 395	3/16	.210 ±.005	.185 to .188	.017 to .030	8 to 14	.003 to .006	.281 to .286	.311 to .316	.410 to .415	.020 to .035	.004
425 through 475	1/4	.275 ±.006	.237 to .240	.029 to .044	11 to 16	.004 to .007	.375 to .380	.408 to .413	.538 to .543	.020 to .035	.005

(a) Clearance (extrusion gap) must be held to a minimum consistent with design requirements for temperature range variation.
(b) Total indicator reading between groove and adjacent bearing surface.

NOTE: For sizes larger than those shown in the table, please contact your local Parker Seal representative.

09/01/07

Parker Hannifin Corporation
Engineered Polymer Systems Division
Phone: 801 972 3000

Table 11-4. 568 Dynamic O-ring Gland Dimensions — Inch

O-ring 2-Size AS568	Standard Offering	Seal Dimensions					Hardware Dimensions					
							Piston			Rod		
		Inside Diameter	±	Width	±	Mean O.D. (Ref)	A Bore Diameter	B Groove Diameter	C Piston Diameter	D Rod Diameter	E Groove Diameter	F Throat Diameter
							+.002/ -.000	+.000/ -.002	+.000/ -.001	+.000/ -.002	+.002/ -.000	+.001/ -.000
006	X	0.114	0.005	0.070	0.003	0.254	0.249	0.139	0.247	0.124	0.234	0.126
007	X	0.145	0.005	0.070	0.003	0.285	0.280	0.170	0.278	0.155	0.265	0.157
008	X	0.176	0.005	0.070	0.003	0.316	0.311	0.201	0.309	0.186	0.296	0.188
009	X	0.208	0.005	0.070	0.003	0.348	0.343	0.233	0.341	0.218	0.328	0.220
010	X	0.239	0.005	0.070	0.003	0.379	0.374	0.264	0.372	0.249	0.359	0.251
011	X	0.301	0.005	0.070	0.003	0.441	0.436	0.326	0.434	0.311	0.421	0.313
012	X	0.364	0.005	0.070	0.003	0.504	0.499	0.389	0.497	0.374	0.484	0.376
104	X	0.112	0.005	0.103	0.003	0.318	0.312	0.136	0.310	0.124	0.300	0.126
105		0.143	0.005	0.103	0.003	0.349	0.343	0.167	0.341	0.155	0.331	0.157
106		0.174	0.005	0.103	0.003	0.380	0.374	0.198	0.372	0.186	0.362	0.188
107		0.206	0.005	0.103	0.003	0.412	0.406	0.230	0.404	0.218	0.394	0.220
108		0.237	0.005	0.103	0.003	0.443	0.437	0.261	0.435	0.249	0.425	0.313
110	X	0.362	0.005	0.103	0.003	0.568	0.562	0.386	0.560	0.374	0.550	0.376
111	X	0.424	0.005	0.103	0.003	0.630	0.624	0.448	0.622	0.436	0.612	0.438
112	X	0.487	0.005	0.103	0.003	0.693	0.687	0.511	0.685	0.499	0.675	0.501
113	X	0.549	0.007	0.103	0.003	0.755	0.749	0.573	0.747	0.561	0.737	0.563
114	X	0.612	0.009	0.103	0.003	0.818	0.812	0.636	0.810	0.624	0.800	0.626
115	X	0.674	0.009	0.103	0.003	0.880	0.874	0.698	0.872	0.686	0.862	0.688
116	X	0.737	0.009	0.103	0.003	0.943	0.937	0.761	0.935	0.749	0.925	0.751
201		0.171	0.005	0.139	0.004	0.449	0.437	0.195	0.434	0.185	0.427	0.188
202		0.234	0.005	0.139	0.004	0.512	0.500	0.258	0.497	0.248	0.490	0.251
203		0.296	0.005	0.139	0.004	0.574	0.562	0.320	0.559	0.310	0.552	0.313
204		0.359	0.005	0.139	0.004	0.637	0.625	0.383	0.622	0.373	0.615	0.376
205		0.421	0.005	0.139	0.004	0.699	0.687	0.445	0.684	0.435	0.677	0.438
206	X	0.484	0.005	0.139	0.004	0.762	0.750	0.508	0.747	0.498	0.740	0.501
207		0.546	0.007	0.139	0.004	0.824	0.812	0.570	0.809	0.560	0.802	0.563
208	X	0.609	0.009	0.139	0.004	0.887	0.875	0.633	0.872	0.623	0.865	0.626
209	X	0.671	0.009	0.139	0.004	0.949	0.937	0.695	0.934	0.685	0.927	0.688
210	X	0.734	0.010	0.139	0.004	1.012	1.000	0.758	0.997	0.748	0.990	0.751
211	X	0.796	0.010	0.139	0.004	1.074	1.062	0.820	1.059	0.810	1.052	0.813
212	X	0.859	0.010	0.139	0.004	1.137	1.125	0.883	1.122	0.873	1.115	0.876
213	X	0.921	0.010	0.139	0.004	1.199	1.187	0.945	1.184	0.935	1.177	0.938
214	X	0.984	0.010	0.139	0.004	1.262	1.250	1.008	1.247	0.998	1.240	1.001
215		1.046	0.010	0.139	0.004	1.324	1.312	1.070	1.309	1.060	1.302	1.063
216	X	1.109	0.012	0.139	0.004	1.387	1.375	1.133	1.372	1.123	1.365	1.126
217	X	1.171	0.012	0.139	0.004	1.449	1.437	1.195	1.434	1.185	1.427	1.188
218	X	1.234	0.012	0.139	0.004	1.512	1.500	1.258	1.497	1.248	1.490	1.251
219	X	1.296	0.012	0.139	0.004	1.574	1.562	1.320	1.559	1.310	1.552	1.313

Those Piston O.D.'s shown in shaded area may over stretch the o-ring. If so, select a material with greater elongation or use a two-piece piston.

Parker Hannifin Corporation
Engineered Polymer Systems Division
Phone: 801 972 3000

Table 11-4. 568 Dynamic O-ring Gland Dimensions — Inch (Continued)

O-ring 2-Size AS568	Standard Offering	Seal Dimensions					Hardware Dimensions					
							Piston			Rod		
		Inside Diameter	±	Width	±	Mean O.D. (Ref)	A Bore Diameter	B Groove Diameter	C Piston Diameter	D Rod Diameter	E Groove Diameter	F Throat Diameter
							+.002/ -.000	+.000/ -.002	+.000/ -.001	+.000/ -.002	+.002/ -.000	+.001/ -.000
220	X	1.359	0.012	0.139	0.004	1.637	1.625	1.383	1.622	1.373	1.615	1.376
221		1.421	0.012	0.139	0.004	1.699	1.687	1.445	1.684	1.435	1.677	1.438
222	X	1.484	0.015	0.139	0.004	1.762	1.750	1.508	1.747	1.498	1.740	1.501
309		0.412	0.005	0.210	0.005	0.832	0.812	0.442	0.809	0.435	0.805	0.438
310		0.475	0.005	0.210	0.005	0.895	0.875	0.505	0.872	0.498	0.868	0.501
311	X	0.537	0.007	0.210	0.005	0.957	0.937	0.567	0.934	0.560	0.930	0.563
312		0.600	0.009	0.210	0.005	1.020	1.000	0.630	0.997	0.623	0.993	0.626
313		0.662	0.009	0.210	0.005	1.082	1.062	0.692	1.059	0.685	1.055	0.688
314		0.725	0.010	0.210	0.005	1.145	1.125	0.755	1.122	0.748	1.118	0.751
315		0.787	0.010	0.210	0.005	1.207	1.187	0.817	1.184	0.810	1.180	0.813
316		0.850	0.010	0.210	0.005	1.270	1.250	0.880	1.247	0.873	1.243	0.876
317		0.912	0.010	0.210	0.005	1.332	1.312	0.942	1.309	0.935	1.305	0.938
318		0.975	0.010	0.210	0.005	1.395	1.375	1.005	1.372	0.998	1.368	1.001
319	X	1.037	0.010	0.210	0.005	1.457	1.437	1.067	1.434	1.060	1.430	1.063
320		1.100	0.012	0.210	0.005	1.520	1.500	1.130	1.497	1.123	1.493	1.126
321	X	1.162	0.012	0.210	0.005	1.582	1.562	1.192	1.559	1.185	1.555	1.188
322		1.225	0.012	0.210	0.005	1.645	1.625	1.255	1.622	1.248	1.618	1.251
323		1.287	0.012	0.210	0.005	1.707	1.687	1.317	1.684	1.310	1.680	1.313
324	X	1.350	0.012	0.210	0.005	1.770	1.750	1.380	1.747	1.373	1.743	1.376
325	X	1.475	0.015	0.210	0.005	1.895	1.875	1.505	1.872	1.498	1.868	1.501
326		1.600	0.015	0.210	0.005	2.020	2.000	1.630	1.997	1.623	1.993	1.626
327	X	1.725	0.015	0.210	0.005	2.145	2.125	1.755	2.122	1.748	2.118	1.751
328	X	1.850	0.015	0.210	0.005	2.270	2.250	1.880	2.247	1.873	2.243	1.876
329	X	1.975	0.018	0.210	0.005	2.395	2.375	2.005	2.372	1.998	2.368	2.001
330		2.100	0.018	0.210	0.005	2.520	2.500	2.130	2.497	2.123	2.493	2.126
331		2.225	0.018	0.210	0.005	2.645	2.625	2.255	2.622	2.248	2.618	2.251
332	X	2.350	0.018	0.210	0.005	2.770	2.750	2.380	2.747	2.373	2.743	2.376
333		2.475	0.020	0.210	0.005	2.895	2.875	2.505	2.872	2.498	2.868	2.501
334		2.600	0.020	0.210	0.005	3.020	3.000	2.630	2.997	2.623	2.993	2.626
335		2.725	0.020	0.210	0.005	3.145	3.125	2.755	3.122	2.748	3.118	2.751
336		2.850	0.020	0.210	0.005	3.270	3.250	2.880	3.247	2.873	3.243	2.876
337	X	2.975	0.024	0.210	0.005	3.395	3.375	3.005	3.372	2.998	3.368	3.001
338		3.100	0.024	0.210	0.005	3.520	3.500	3.130	3.497	3.123	3.493	3.126
339		3.225	0.024	0.210	0.005	3.645	3.625	3.255	3.622	3.248	3.618	3.251
340		3.350	0.024	0.210	0.005	3.770	3.750	3.380	3.747	3.373	3.743	3.376
341	X	3.475	0.024	0.210	0.005	3.895	3.875	3.505	3.872	3.498	3.868	3.501
342		3.600	0.028	0.210	0.005	4.020	4.000	3.630	3.997	3.623	3.993	3.626
343		3.725	0.028	0.210	0.005	4.145	4.125	3.755	4.122	3.748	4.118	3.751

Those Piston O.D.'s shown in shaded area may over stretch the o-ring. If so, select a material with greater elongation or use a two-piece piston.

Parker Hannifin Corporation
Engineered Polymer Systems Division
Phone: 801 972 3000

Table 11-4. 568 Dynamic O-ring Gland Dimensions — Inch (Continued)

O-ring 2-Size AS568	Standard Offering	Seal Dimensions					Hardware Dimensions					
							Piston			Rod		
		Inside Diameter	±	Width	±	Mean O.D. (Ref)	A Bore Diameter	B Groove Diameter	C Piston Diameter	D Rod Diameter	E Groove Diameter	F Throat Diameter
							+.002/ -.000	+.000/ -.002	+.000/ -.001	+.000/ -.002	+.002/ -.000	+.001/ -.000
344		3.850	0.028	0.210	0.005	4.270	4.250	3.880	4.247	3.873	4.243	3.876
345		3.975	0.028	0.210	0.005	4.395	4.375	4.005	4.372	3.998	4.368	4.001
346		4.100	0.028	0.210	0.005	4.520	4.500	4.130	4.497	4.123	4.493	4.126
347		4.225	0.030	0.210	0.005	4.645	4.625	4.255	4.622	4.248	4.618	4.251
348	X	4.350	0.030	0.210	0.005	4.770	4.750	4.380	4.747	4.373	4.743	4.376
349		4.475	0.030	0.210	0.005	4.895	4.875	4.505	4.872	4.498	4.868	4.501
425		4.475	0.033	0.275	0.006	5.025	5.002	4.528	4.998	4.497	4.971	4.501
426		4.600	0.033	0.275	0.006	5.150	5.127	4.653	5.123	4.622	5.096	4.626
427		4.725	0.033	0.275	0.006	5.275	5.252	4.778	5.248	4.747	5.221	4.751
428		4.850	0.033	0.275	0.006	5.400	5.377	4.903	5.373	4.872	5.346	4.876
429		4.975	0.037	0.275	0.006	5.525	5.502	5.028	5.498	4.997	5.471	5.001
430		5.100	0.037	0.275	0.006	5.650	5.627	5.153	5.623	5.122	5.596	5.126
431		5.225	0.037	0.275	0.006	5.775	5.752	5.278	5.748	5.247	5.721	5.251
432	X	5.350	0.037	0.275	0.006	5.900	5.877	5.403	5.873	5.372	5.846	5.376
433		5.475	0.037	0.275	0.006	6.025	6.002	5.528	5.998	5.497	5.971	5.501
434		5.600	0.037	0.275	0.006	6.150	6.127	5.653	6.123	5.622	6.096	5.626
435		5.725	0.037	0.275	0.006	6.275	6.252	5.778	6.248	5.747	6.221	5.751
436		5.850	0.037	0.275	0.006	6.400	6.377	5.903	6.373	5.872	6.346	5.876
437		5.975	0.037	0.275	0.006	6.525	6.502	6.028	6.498	5.997	6.471	6.001
438		6.225	0.040	0.275	0.006	6.775	6.752	6.278	6.748	6.247	6.721	6.251
439		6.475	0.040	0.275	0.006	7.025	7.002	6.528	6.998	6.497	6.971	6.501
440		6.725	0.040	0.275	0.006	7.275	7.252	6.778	7.248	6.747	7.221	6.751
441		6.975	0.040	0.275	0.006	7.525	7.502	7.028	7.498	6.997	7.471	7.001
442		7.225	0.045	0.275	0.006	7.775	7.752	7.278	7.748	7.247	7.721	7.251
443		7.475	0.045	0.275	0.006	8.025	8.002	7.528	7.998	7.497	7.971	7.501
444		7.725	0.045	0.275	0.006	8.275	8.252	7.778	8.248	7.747	8.221	7.751
445		7.975	0.045	0.275	0.006	8.525	8.502	8.028	8.498	7.997	8.471	8.001
446		8.475	0.055	0.275	0.006	9.025	9.002	8.528	8.998	8.497	8.971	8.501
447		8.975	0.055	0.275	0.006	9.525	9.502	9.028	9.498	8.997	9.471	9.001
448		9.475	0.055	0.275	0.006	10.025	10.002	9.528	9.998	9.497	9.971	9.501
449		9.975	0.055	0.275	0.006	10.525	10.502	10.028	10.498	9.997	10.471	10.001
450		10.475	0.060	0.275	0.006	11.025	11.002	10.528	10.998	10.497	10.971	10.501
451		10.975	0.060	0.275	0.006	11.525	11.502	11.028	11.498	10.997	11.471	11.001
452		11.475	0.060	0.275	0.006	12.025	12.002	11.528	11.998	11.497	11.971	11.501
453		11.975	0.060	0.275	0.006	12.525	12.502	12.028	12.498	11.997	12.471	12.001
454		12.475	0.060	0.275	0.006	13.025	13.002	12.528	12.998	12.497	12.971	12.501
455		12.975	0.060	0.275	0.006	13.525	13.502	13.028	13.498	12.997	13.471	13.001
456		13.475	0.070	0.275	0.006	14.025	14.002	13.528	13.998	13.497	13.971	13.501

Those Piston O.D.'s shown in shaded area may over stretch the o-ring. If so, select a material with greater elongation or use a two-piece piston.

Parker Hannifin Corporation
Engineered Polymer Systems Division
Phone: 801 972 3000

Table 11-4. 568 Dynamic O-ring Gland Dimensions — Inch (Continued)

O-ring 2-Size AS568	Standard Offering	Seal Dimensions					Hardware Dimensions					
							Piston			Rod		
		Inside Diameter	±	Width	±	Mean O.D. (Ref)	A Bore Diameter	B Groove Diameter	C Piston Diameter	D Rod Diameter	E Groove Diameter	F Throat Diameter
							+.002/ -.000	+.000/ -.002	+.000/ -.001	+.000/ -.002	+.002/ -.000	+.001/ -.000
457		13.975	0.070	0.275	0.006	14.525	14.502	14.028	14.498	13.997	14.471	14.001
458		14.475	0.070	0.275	0.006	15.025	15.002	14.528	14.998	14.497	14.971	14.501
459		14.975	0.070	0.275	0.006	15.525	15.502	15.028	15.498	14.997	15.471	15.001
460		15.475	0.070	0.275	0.006	16.025	16.002	15.528	15.998	15.497	15.971	15.501

Those Piston O.D.'s shown in shaded area may over stretch the o-ring. If so, select a material with greater elongation or use a two-piece piston.

NOTE: For sizes larger than those shown in the table, please contact your local Parker Seal representative.

Gland Dimensions — 568 Profile — Static

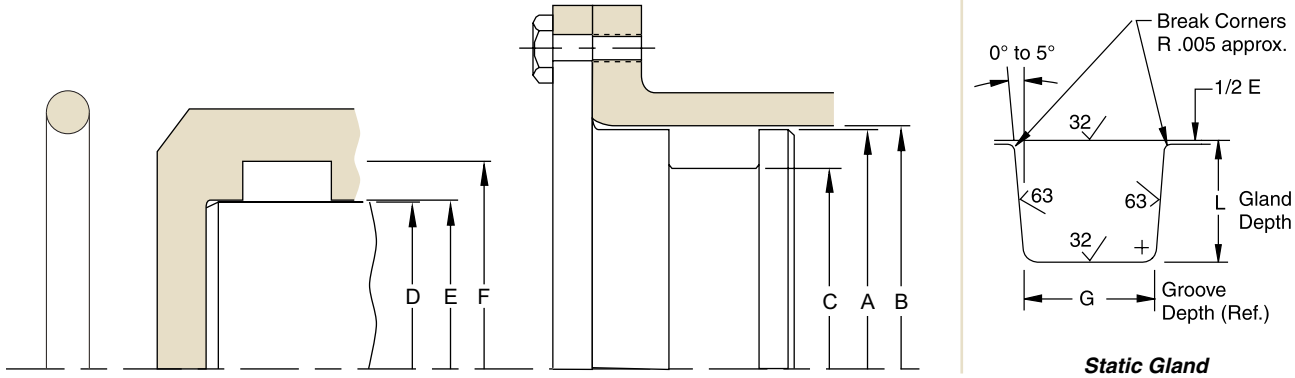

Static Gland

Please refer to Engineering Section 2, page 2-8 for surface finish and additional hardware considerations.

Table 11-5. General O-ring Dimensional Data

O-ring 2-Size AS568	Cross Section		Static				G-Groove Width				
				Squeeze							
	Nominal	Actual	L Gland Depth	Actual	%	E Diametral Clearance (a)	0 Back-up Ring (G)	1 Back-up Ring (G)	2 Back-up Ring (G)	R Groove Radius	Max. Eccentricity (b)
004 to 050	1/16	0.070 ±0.003	0.050 to 0.052	0.015 to 0.023	22 to 32	0.002 to 0.005	0.093 to 0.098	0.138 to 0.143	0.205 to 0.210	0.005 to 0.015	0.002
102 through 178	3/32	.103 ±0.003	0.081 to 0.083	0.017 to 0.025	17 to 24	0.002 to 0.005	0.140 to 0.145	0.171 to 0.176	0.238 to 0.243	0.005 to 0.015	0.002
201 through 284	1/8	.139 ±0.004	0.111 to 0.113	0.022 to 0.032	16 to 23	0.003 to 0.006	0.187 to 0.192	0.208 to 0.213	0.275 to 0.280	0.010 to 0.025	0.003
309 through 395	3/16	.210 ±0.005	0.170 to 0.173	0.032 to 0.045	15 to 21	0.003 to 0.006	0.281 to 0.286	0.311 to 0.316	0.410 to 0.415	0.020 to 0.035	0.004
425 through 475	1/4	.275 ±0.006	0.226 to 0.229	0.040 to 0.055	15 to 20	0.004 to 0.007	0.375 to 0.380	0.408 to 0.413	0.538 to 0.543	0.020 to 0.035	0.005

(a) Clearance (extrusion gap) must be held to a minimum consistent with design requirements for temperature range variation.
(b) Total indicator reading between groove and adjacent bearing surface.

NOTE: For sizes larger than those shown in the table, please contact your local Parker Seal representative.

Parker Hannifin Corporation
Engineered Polymer Systems Division
Phone: 801 972 3000

Table 11-6. 568 Static O-ring Gland Dimensions — Inch

O-ring 2-Size AS568	X*	Seal Dimensions					Piston			Rod		
		Inside Diameter	±	Width	±	Mean O.D. (Ref)	A	B	C	D	E	F
							Piston Diameter	Bore Diameter	Groove Diameter	Rod Diameter	Throat Diameter	Groove Diameter
							+.000/-.001	+.002/-.000	+.000/-.002	+.000/-.002	+.001/-.000	+.002/-.000
001		0.029	0.004	0.040	0.003	0.109	0.103	0.105	0.044	0.040	0.042	0.101
002		0.042	0.004	0.050	0.003	0.142	0.136	0.138	0.059	0.053	0.055	0.132
003		0.056	0.004	0.060	0.003	0.176	0.170	0.173	0.077	0.067	0.069	0.162
004		0.070	0.005	0.070	0.003	0.210	0.204	0.206	0.106	0.081	0.083	0.181
005	X	0.101	0.005	0.070	0.003	0.241	0.235	0.237	0.137	0.112	0.114	0.212
006	X	0.114	0.005	0.070	0.003	0.254	0.248	0.250	0.150	0.125	0.127	0.225
007	X	0.145	0.005	0.070	0.003	0.285	0.279	0.281	0.181	0.156	0.158	0.256
008	X	0.176	0.005	0.070	0.003	0.316	0.310	0.312	0.212	0.187	0.189	0.287
009	X	0.208	0.005	0.070	0.003	0.348	0.341	0.343	0.243	0.218	0.220	0.318
010	X	0.239	0.005	0.070	0.003	0.379	0.373	0.375	0.275	0.250	0.252	0.350
011	X	0.301	0.005	0.070	0.003	0.441	0.435	0.437	0.337	0.312	0.314	0.412
012	X	0.364	0.005	0.070	0.003	0.504	0.498	0.500	0.400	0.375	0.377	0.475
013	X	0.426	0.005	0.070	0.003	0.566	0.560	0.562	0.462	0.437	0.439	0.537
014	X	0.489	0.005	0.070	0.003	0.629	0.623	0.625	0.525	0.500	0.502	0.600
015	X	0.551	0.007	0.070	0.003	0.691	0.685	0.687	0.587	0.562	0.564	0.662
016	X	0.614	0.009	0.070	0.003	0.754	0.748	0.750	0.650	0.625	0.627	0.725
017	X	0.676	0.009	0.070	0.003	0.816	0.810	0.812	0.712	0.687	0.689	0.787
018	X	0.739	0.009	0.070	0.003	0.879	0.873	0.875	0.775	0.750	0.752	0.850
019	X	0.801	0.009	0.070	0.003	0.941	0.935	0.937	0.837	0.812	0.814	0.912
020	X	0.864	0.009	0.070	0.003	1.004	0.998	1.000	0.900	0.875	0.877	0.975
021	X	0.926	0.009	0.070	0.003	1.066	1.060	1.062	0.962	0.937	0.939	1.037
022	X	0.989	0.010	0.070	0.003	1.129	1.123	1.125	1.025	1.000	1.002	1.100
023	X	1.051	0.010	0.070	0.003	1.191	1.185	1.187	1.087	1.062	1.064	1.162
024	X	1.114	0.010	0.070	0.003	1.254	1.248	1.250	1.150	1.125	1.127	1.225
025		1.176	0.011	0.070	0.003	1.316	1.310	1.312	1.212	1.187	1.189	1.287
026	X	1.239	0.011	0.070	0.003	1.379	1.373	1.375	1.275	1.250	1.252	1.350
027	X	1.301	0.011	0.070	0.003	1.441	1.435	1.437	1.337	1.312	1.314	1.412
028	X	1.364	0.013	0.070	0.003	1.504	1.498	1.500	1.400	1.375	1.377	1.475
029	X	1.489	0.013	0.070	0.003	1.629	1.623	1.625	1.525	1.500	1.502	1.600
030	X	1.614	0.013	0.070	0.003	1.754	1.748	1.750	1.650	1.625	1.627	1.725
031		1.739	0.015	0.070	0.003	1.879	1.873	1.875	1.775	1.750	1.752	1.850
032		1.864	0.015	0.070	0.003	2.004	1.998	2.000	1.900	1.875	1.877	1.975
033		1.989	0.018	0.070	0.003	2.129	2.123	2.125	2.025	2.000	2.002	2.100
034		2.114	0.018	0.070	0.003	2.254	2.248	2.250	2.150	2.125	2.127	2.225
035		2.239	0.018	0.070	0.003	2.379	2.373	2.375	2.275	2.250	2.252	2.350
036		2.364	0.018	0.070	0.003	2.504	2.498	2.500	2.400	2.375	2.377	2.475
037	X	2.489	0.018	0.070	0.003	2.629	2.623	2.625	2.525	2.500	2.502	2.600

*X = Standard Offering.

Those Piston O.D.'s shown in shaded area may over stretch the o-ring. If so, select a material with greater elongation or use a two-piece piston.

Parker Hannifin Corporation
Engineered Polymer Systems Division
Phone: 801 972 3000

Table 11-6. 568 Static O-ring Gland Dimensions — Inch (Continued)

O-ring 2-Size AS568	X*	Seal Dimensions					Piston			Rod		
		Inside Diameter	±	Width	±	Mean O.D. (Ref)	A	B	C	D	E	F
							Piston Diameter	Bore Diameter	Groove Diameter	Rod Diameter	Throat Diameter	Groove Diameter
							+.000/-.001	+.002/-.000	+.000/-.002	+.000/-.002	+.001/-.000	+.002/-.000
038		2.614	0.020	0.070	0.003	2.754	2.748	2.750	2.650	2.625	2.627	2.725
039		2.739	0.020	0.070	0.003	2.879	2.873	2.875	2.775	2.750	2.752	2.850
040		2.864	0.020	0.070	0.003	3.004	2.998	3.000	2.900	2.875	2.877	2.975
041		2.989	0.024	0.070	0.003	3.129	3.123	3.125	3.025	3.000	3.002	3.100
042		3.239	0.024	0.070	0.003	3.379	3.373	3.375	3.275	3.250	3.252	3.350
043		3.489	0.024	0.070	0.003	3.629	3.623	3.625	3.525	3.500	3.502	3.600
044		3.739	0.027	0.070	0.003	3.879	3.873	3.875	3.775	3.750	3.752	3.850
045		3.989	0.027	0.070	0.003	4.129	4.123	4.125	4.025	4.000	4.002	4.100
046		4.239	0.030	0.070	0.003	4.379	4.373	4.375	4.275	4.250	4.252	4.350
047		4.489	0.030	0.070	0.003	4.629	4.623	4.625	4.525	4.500	4.502	4.600
048		4.739	0.030	0.070	0.003	4.879	4.873	4.875	4.775	4.750	4.752	4.850
049		4.989	0.037	0.070	0.003	5.129	5.123	5.125	5.025	5.000	5.002	5.100
050		5.239	0.037	0.070	0.003	5.379	5.373	5.375	5.275	5.250	5.252	5.350
102		0.049	0.005	0.103	0.003	0.255	0.245	0.247	0.085	0.062	0.064	0.224
103		0.081	0.005	0.103	0.003	0.287	0.276	0.278	0.116	0.094	0.095	0.256
104		0.112	0.005	0.103	0.003	0.318	0.308	0.310	0.148	0.125	0.127	0.287
105		0.143	0.005	0.103	0.003	0.349	0.340	0.342	0.180	0.156	0.158	0.318
106		0.174	0.005	0.103	0.003	0.380	0.372	0.374	0.212	0.187	0.189	0.349
107		0.206	0.005	0.103	0.003	0.412	0.403	0.405	0.243	0.219	0.221	0.381
108		0.237	0.005	0.103	0.003	0.443	0.435	0.437	0.275	0.250	0.252	0.412
109	X	0.299	0.005	0.103	0.003	0.505	0.498	0.500	0.338	0.312	0.314	0.474
110	X	0.362	0.005	0.103	0.003	0.568	0.560	0.562	0.400	0.375	0.377	0.537
111	X	0.424	0.005	0.103	0.003	0.630	0.623	0.625	0.463	0.437	0.439	0.599
112	X	0.487	0.005	0.103	0.003	0.693	0.685	0.687	0.525	0.500	0.502	0.662
113	X	0.549	0.007	0.103	0.003	0.755	0.748	0.750	0.588	0.562	0.564	0.724
114	X	0.612	0.009	0.103	0.003	0.818	0.810	0.812	0.650	0.625	0.627	0.787
115	X	0.674	0.009	0.103	0.003	0.880	0.873	0.875	0.713	0.687	0.689	0.849
116	X	0.737	0.009	0.103	0.003	0.943	0.935	0.937	0.775	0.750	0.752	0.912
117	X	0.799	0.010	0.103	0.003	1.005	0.998	1.000	0.838	0.812	0.814	0.974
118	X	0.862	0.010	0.103	0.003	1.068	1.060	1.062	0.900	0.875	0.877	1.037
119	X	0.924	0.010	0.103	0.003	1.130	1.123	1.125	0.963	0.937	0.939	1.099
120	X	0.987	0.010	0.103	0.003	1.193	1.185	1.187	1.025	1.000	1.002	1.162
121	X	1.049	0.010	0.103	0.003	1.255	1.248	1.250	1.088	1.062	1.064	1.224
122	X	1.112	0.010	0.103	0.003	1.318	1.310	1.312	1.150	1.125	1.127	1.287
123	X	1.174	0.012	0.103	0.003	1.380	1.373	1.375	1.213	1.187	1.189	1.349
124	X	1.237	0.012	0.103	0.003	1.443	1.435	1.437	1.275	1.250	1.252	1.412
125	X	1.299	0.012	0.103	0.003	1.505	1.498	1.500	1.338	1.312	1.314	1.474

*X = Standard Offering.

Those Piston O.D.'s shown in shaded area may over stretch the o-ring. If so, select a material with greater elongation or use a two-piece piston.

Parker Hannifin Corporation
Engineered Polymer Systems Division
Phone: 801 972 3000

Table 11-6. 568 Static O-ring Gland Dimensions — Inch (Continued)

O-ring 2-Size AS568	X*	Seal Dimensions					Piston			Rod		
		Inside Diameter	±	Width	±	Mean O.D. (Ref)	A	B	C	D	E	F
							Piston Diameter	Bore Diameter	Groove Diameter	Rod Diameter	Throat Diameter	Groove Diameter
							+.000/-.001	+.002/-.000	+.000/-.002	+.000/-.002	+.001/-.000	+.002/-.000
126	X	1.362	0.012	0.103	0.003	1.568	1.560	1.562	1.400	1.375	1.377	1.537
127	X	1.424	0.012	0.103	0.003	1.630	1.623	1.625	1.463	1.437	1.439	1.599
128	X	1.487	0.012	0.103	0.003	1.693	1.685	1.687	1.525	1.500	1.502	1.662
129	X	1.549	0.015	0.103	0.003	1.755	1.748	1.750	1.588	1.562	1.564	1.724
130	X	1.612	0.015	0.103	0.003	1.818	1.810	1.812	1.650	1.625	1.627	1.787
131	X	1.674	0.015	0.103	0.003	1.880	1.873	1.875	1.713	1.687	1.689	1.849
132		1.737	0.015	0.103	0.003	1.943	1.935	1.937	1.775	1.750	1.752	1.912
133	X	1.799	0.015	0.103	0.003	2.005	1.998	2.000	1.838	1.812	1.814	1.974
134	X	1.862	0.015	0.103	0.003	2.068	2.060	2.062	1.900	1.875	1.877	2.037
135	X	1.925	0.017	0.103	0.003	2.131	2.123	2.125	1.963	1.997	1.939	2.099
136	X	1.987	0.017	0.103	0.003	2.193	2.185	2.187	2.025	2.000	2.002	2.162
137		2.050	0.017	0.103	0.003	2.256	2.248	2.250	2.088	2.062	2.064	2.224
138		2.112	0.017	0.103	0.003	2.318	2.310	2.312	2.150	2.125	2.127	2.287
139		2.175	0.017	0.103	0.003	2.381	2.373	2.375	2.213	2.187	2.189	2.349
140		2.237	0.017	0.103	0.003	2.443	2.435	2.437	2.275	2.250	2.252	2.412
141		2.300	0.020	0.103	0.003	2.506	2.498	2.500	2.338	2.312	2.315	2.474
142	X	2.362	0.020	0.103	0.003	2.568	2.560	2.562	2.400	2.375	2.377	2.537
143	X	2.425	0.020	0.103	0.003	2.631	2.623	2.625	2.463	2.437	2.439	2.599
144	X	2.487	0.020	0.103	0.003	2.693	2.685	2.687	2.525	2.500	2.502	2.662
145		2.550	0.020	0.103	0.003	2.756	2.748	2.750	2.588	2.562	2.564	2.724
146		2.612	0.020	0.103	0.003	2.818	2.810	2.812	2.650	2.625	2.627	2.787
147		2.675	0.022	0.103	0.003	2.881	2.873	2.875	2.713	2.687	2.689	2.849
148		2.737	0.022	0.103	0.003	2.943	2.935	2.937	2.775	2.750	2.752	2.912
149		2.800	0.022	0.103	0.003	3.006	2.998	3.000	2.838	2.812	2.814	2.974
150		2.862	0.022	0.103	0.003	3.068	3.060	3.062	2.900	2.875	2.877	3.037
151		2.987	0.024	0.103	0.003	3.193	3.185	3.187	3.025	3.000	3.002	3.162
152		3.237	0.024	0.103	0.003	3.443	3.435	3.437	3.275	3.250	3.252	3.412
153		3.487	0.024	0.103	0.003	3.693	3.685	3.687	3.525	3.500	3.502	3.662
154		3.737	0.028	0.103	0.003	3.943	3.935	3.937	3.775	3.750	3.752	3.912
155	X	3.987	0.028	0.103	0.003	4.193	4.185	4.187	4.025	4.000	4.002	4.162
156	X	4.237	0.030	0.103	0.003	4.443	4.435	4.437	4.275	4.250	4.252	4.412
157		4.487	0.030	0.103	0.003	4.693	4.685	4.687	4.525	4.500	4.502	4.662
158		4.737	0.030	0.103	0.003	4.943	4.935	4.937	4.775	4.750	4.752	4.912
159		4.987	0.035	0.103	0.003	5.193	5.185	5.187	5.025	5.000	5.002	5.162
160		5.237	0.035	0.103	0.003	5.443	5.435	5.437	5.275	5.250	5.252	5.412
161		5.487	0.035	0.103	0.003	5.693	5.685	5.687	5.525	5.500	5.502	5.662
162		5.737	0.035	0.103	0.003	5.943	5.935	5.937	5.775	5.750	5.752	5.912

*X = Standard Offering.

Those Piston O.D.'s shown in shaded area may over stretch the o-ring. If so, select a material with greater elongation or use a two-piece piston.

Parker Hannifin Corporation
Engineered Polymer Systems Division
Phone: 801 972 3000

Table 11-6. 568 Static O-ring Gland Dimensions — Inch (Continued)

O-ring 2-Size AS568	X*	Seal Dimensions					Piston			Rod		
		Inside Diameter	±	Width	±	Mean O.D. (Ref)	A	B	C	D	E	F
							Piston Diameter	Bore Diameter	Groove Diameter	Rod Diameter	Throat Diameter	Groove Diameter
							+.000/-.001	+.002/-.000	+.000/-.002	+.000/-.002	+.001/-.000	+.002/-.000
163		5.987	0.035	0.103	0.003	6.193	6.185	6.187	6.025	6.000	6.002	6.162
164		6.237	0.040	0.103	0.003	6.443	6.435	6.437	6.275	6.250	6.252	6.412
165		6.487	0.040	0.103	0.003	6.693	6.685	6.687	6.525	6.500	6.502	6.662
166		6.737	0.040	0.103	0.003	6.943	6.935	6.937	6.775	6.750	6.752	6.912
167		6.987	0.040	0.103	0.003	7.193	7.185	7.187	7.025	7.000	7.002	7.162
201		0.171	0.005	0.139	0.004	0.449	0.434	0.437	0.215	0.187	0.190	0.409
202		0.234	0.005	0.139	0.004	0.512	0.497	0.500	0.278	0.250	0.253	0.472
203		0.296	0.005	0.139	0.004	0.574	0.559	0.562	0.340	0.312	0.315	0.534
204		0.359	0.005	0.139	0.004	0.637	0.622	0.625	0.403	0.375	0.378	0.597
205		0.421	0.005	0.139	0.004	0.699	0.684	0.687	0.465	0.437	0.440	0.659
206	X	0.484	0.005	0.139	0.004	0.762	0.747	0.750	0.528	0.500	0.503	0.722
207		0.546	0.007	0.139	0.004	0.824	0.809	0.812	0.590	0.562	0.565	0.784
208	X	0.609	0.009	0.139	0.004	0.887	0.872	0.875	0.653	0.625	0.628	0.847
209	X	0.671	0.009	0.139	0.004	0.949	0.934	0.937	0.715	0.687	0.690	0.909
210	X	0.734	0.010	0.139	0.004	1.012	0.997	1.000	0.778	0.750	0.753	0.972
211	X	0.796	0.010	0.139	0.004	1.074	1.059	1.062	0.840	0.812	0.815	1.034
212	X	0.859	0.010	0.139	0.004	1.137	1.122	1.125	0.903	0.875	0.878	1.097
213	X	0.921	0.010	0.139	0.004	1.199	1.184	1.187	0.965	0.937	0.940	1.159
214	X	0.984	0.010	0.139	0.004	1.262	1.247	1.250	1.028	1.000	1.003	1.222
215		1.046	0.010	0.139	0.004	1.324	1.309	1.312	1.090	1.062	1.065	1.284
216	X	1.109	0.012	0.139	0.004	1.387	1.372	1.375	1.153	1.125	1.128	1.347
217	X	1.171	0.012	0.139	0.004	1.449	1.434	1.437	1.215	1.187	1.190	1.409
218	X	1.234	0.012	0.139	0.004	1.512	1.497	1.500	1.278	1.250	1.253	1.472
219	X	1.296	0.012	0.139	0.004	1.574	1.559	1.562	1.340	1.312	1.315	1.534
220	X	1.359	0.012	0.139	0.004	1.637	1.622	1.625	1.403	1.375	1.378	1.597
221		1.421	0.012	0.139	0.004	1.699	1.684	1.687	1.465	1.437	1.440	1.659
222	X	1.484	0.015	0.139	0.004	1.762	1.747	1.750	1.528	1.500	1.503	1.722
223	X	1.609	0.015	0.139	0.004	1.887	1.872	1.875	1.653	1.625	1.628	1.847
224	X	1.734	0.015	0.139	0.004	2.012	1.997	2.000	1.778	1.750	1.753	1.972
225	X	1.859	0.015	0.139	0.004	2.137	2.122	2.125	1.903	1.875	1.878	2.097
226		1.984	0.018	0.139	0.004	2.262	2.247	2.250	2.028	2.000	2.003	2.222
227		2.109	0.018	0.139	0.004	2.387	2.372	2.375	2.153	2.125	2.128	2.347
228	X	2.234	0.020	0.139	0.004	2.512	2.497	2.500	2.278	2.250	2.253	2.472
229		2.359	0.020	0.139	0.004	2.637	2.622	2.625	2.403	2.375	2.378	2.597
230		2.484	0.020	0.139	0.004	2.762	2.747	2.750	2.528	2.500	2.503	2.722
231	X	2.609	0.020	0.139	0.004	2.887	2.872	2.875	2.653	2.625	2.628	2.847
232	X	2.734	0.024	0.139	0.004	3.012	2.997	3.000	2.778	2.750	2.753	2.972

*X = Standard Offering.

Those Piston O.D.'s shown in shaded area may over stretch the o-ring. If so, select a material with greater elongation or use a two-piece piston.

Parker Hannifin Corporation
Engineered Polymer Systems Division
Phone: 801 972 3000

Table 11-6. 568 Static O-ring Gland Dimensions — Inch (Continued)

O-ring 2-Size AS568	X*	Seal Dimensions					Piston			Rod		
		Inside Diameter	±	Width	±	Mean O.D. (Ref)	A	B	C	D	E	F
							Piston Diameter	Bore Diameter	Groove Diameter	Rod Diameter	Throat Diameter	Groove Diameter
							+.000/-.001	+.002/-.000	+.000/-.002	+.000/-.002	+.001/-.000	+.002/-.000
233	X	2.859	0.024	0.139	0.004	3.137	3.122	3.125	2.903	2.875	2.878	3.097
234	X	2.984	0.024	0.139	0.004	3.262	3.247	3.250	3.028	3.000	3.003	3.222
235	X	3.109	0.024	0.139	0.004	3.387	3.372	3.375	3.153	3.125	3.128	3.347
236	X	3.234	0.024	0.139	0.004	3.512	3.497	3.500	3.278	3.250	3.253	3.472
237	X	3.359	0.024	0.139	0.004	3.637	3.622	3.625	3.403	3.375	3.378	3.597
238		3.484	0.024	0.139	0.004	3.762	3.747	3.750	3.528	3.500	3.503	3.722
239		3.609	0.028	0.139	0.004	3.887	3.872	3.875	3.653	3.625	3.628	3.847
240	X	3.734	0.028	0.139	0.004	4.012	3.997	4.000	3.778	3.750	3.753	3.972
241		3.859	0.028	0.139	0.004	4.137	4.122	4.125	3.903	3.875	3.878	4.097
242	X	3.984	0.028	0.139	0.004	4.262	4.247	4.250	4.028	4.000	4.003	4.222
243		4.109	0.028	0.139	0.004	4.387	4.372	4.375	4.153	4.125	4.128	4.347
244		4.234	0.030	0.139	0.004	4.512	4.497	4.500	4.278	4.250	4.253	4.472
245		4.359	0.030	0.139	0.004	4.637	4.622	4.625	4.403	4.375	4.378	4.597
246		4.484	0.030	0.139	0.004	4.762	4.747	4.750	4.528	4.500	4.503	4.722
247		4.609	0.030	0.139	0.004	4.887	4.872	4.875	4.653	4.625	4.628	4.847
248		4.734	0.030	0.139	0.004	5.012	4.997	5.000	4.778	4.750	4.753	4.972
							+.000/-.001	+.002/-.000	+.000/-.004	+.000/-.002	+.001/-.000	+.004/-.000
249		4.859	0.035	0.139	0.004	5.137	5.122	5.125	4.903	4.875	4.878	5.097
250		4.984	0.035	0.139	0.004	5.262	5.247	5.250	5.028	5.000	5.003	5.222
251		5.109	0.035	0.139	0.004	5.387	5.372	5.375	5.153	5.125	5.128	5.347
252		5.234	0.035	0.139	0.004	5.512	5.497	5.500	5.278	5.250	5.253	5.472
253		5.359	0.035	0.139	0.004	5.637	5.622	5.625	5.403	5.375	5.378	5.597
254		5.484	0.035	0.139	0.004	5.762	5.747	5.750	5.528	5.500	5.503	5.722
255		5.609	0.035	0.139	0.004	5.887	5.872	5.875	5.653	5.625	5.628	5.847
256		5.734	0.035	0.139	0.004	6.012	5.997	6.000	5.778	5.750	5.753	5.972
257		5.859	0.035	0.139	0.004	6.137	6.122	6.125	5.903	5.875	5.878	6.097
258		5.984	0.035	0.139	0.004	6.262	6.247	6.250	6.028	6.000	6.003	6.222
259		6.234	0.040	0.139	0.004	6.512	6.497	6.500	6.278	6.250	6.253	6.472
260		6.484	0.040	0.139	0.004	6.762	6.747	6.750	6.528	6.500	6.503	6.722
261		6.734	0.040	0.139	0.004	7.012	6.997	7.000	6.778	6.750	6.753	6.972
262		6.984	0.040	0.139	0.004	7.262	7.247	7.250	7.028	7.000	7.003	7.222
309		0.412	0.005	0.210	0.005	0.832	0.809	0.812	0.472	0.437	0.440	0.777
310		0.475	0.005	0.210	0.005	0.895	0.872	0.875	0.535	0.500	0.503	0.840
311	X	0.537	0.007	0.210	0.005	0.957	0.934	0.937	0.597	0.562	0.565	0.902
312		0.600	0.009	0.210	0.005	1.020	0.997	1.000	0.660	0.625	0.628	0.965
313		0.662	0.009	0.210	0.005	1.082	1.059	1.062	0.722	0.687	0.690	1.027
314		0.725	0.010	0.210	0.005	1.145	1.122	1.125	0.785	0.750	0.753	1.090

*X = Standard Offering.

Those Piston O.D.'s shown in shaded area may over stretch the o-ring. If so, select a material with greater elongation or use a two-piece piston.

Parker Hannifin Corporation
Engineered Polymer Systems Division
Phone: 801 972 3000

Table 11-6. 568 Static O-ring Gland Dimensions — Inch (Continued)

O-ring 2-Size AS568	X*	Seal Dimensions					Piston			Rod		
		Inside Diameter	±	Width	±	Mean O.D. (Ref)	A	B	C	D	E	F
							Piston Diameter	Bore Diameter	Groove Diameter	Rod Diameter	Throat Diameter	Groove Diameter
							+.000/-.001	+.002/-.000	+.000/-.004	+.000/-.002	+.001/-.000	+.004/-.000
315		0.787	0.010	0.210	0.005	1.207	1.184	1.187	0.847	0.812	0.815	1.152
316		0.850	0.010	0.210	0.005	1.270	1.247	1.250	0.910	0.875	0.878	1.215
317		0.912	0.010	0.210	0.005	1.332	1.309	1.312	0.972	0.937	0.940	1.277
318		0.975	0.010	0.210	0.005	1.395	1.372	1.375	1.035	1.000	1.003	1.340
319	X	1.037	0.010	0.210	0.005	1.457	1.434	1.437	1.097	1.062	1.065	1.402
320		1.100	0.012	0.210	0.005	1.520	1.497	1.500	1.160	1.125	1.128	1.465
321	X	1.162	0.012	0.210	0.005	1.582	1.559	1.562	1.222	1.187	1.190	1.527
322		1.225	0.012	0.210	0.005	1.645	1.622	1.625	1.285	1.250	1.253	1.590
323		1.287	0.012	0.210	0.005	1.707	1.684	1.687	1.347	1.312	1.315	1.652
324	X	1.350	0.012	0.210	0.005	1.770	1.747	1.750	1.410	1.375	1.378	1.715
325	X	1.475	0.015	0.210	0.005	1.895	1.872	1.875	1.535	1.500	1.503	1.840
326		1.600	0.015	0.210	0.005	2.020	1.997	2.000	1.660	1.625	1.628	1.965
327	X	1.725	0.015	0.210	0.005	2.145	2.122	2.125	1.785	1.750	1.753	2.090
328	X	1.850	0.015	0.210	0.005	2.270	2.247	2.250	1.910	1.875	1.878	2.215
329	X	1.975	0.018	0.210	0.005	2.395	2.372	2.375	2.035	2.000	2.003	2.340
330		2.100	0.018	0.210	0.005	2.520	2.497	2.500	2.160	2.125	2.128	2.465
331		2.225	0.018	0.210	0.005	2.645	2.622	2.625	2.285	2.250	2.253	2.590
332	X	2.350	0.018	0.210	0.005	2.770	2.747	2.750	2.410	2.375	2.378	2.715
333		2.475	0.020	0.210	0.005	2.895	2.872	2.875	2.535	2.500	2.503	2.840
334		2.600	0.020	0.210	0.005	3.020	2.997	3.000	2.660	2.625	2.628	2.965
335		2.725	0.020	0.210	0.005	3.145	3.122	3.125	2.785	2.750	2.753	3.090
336		2.850	0.020	0.210	0.005	3.270	3.247	3.250	2.910	2.875	2.878	3.215
337	X	2.975	0.024	0.210	0.005	3.395	3.372	3.375	3.035	3.000	3.003	3.340
338		3.100	0.024	0.210	0.005	3.520	3.497	3.500	3.160	3.125	3.128	3.465
339		3.225	0.024	0.210	0.005	3.645	3.622	3.625	3.285	3.250	3.253	3.590
340		3.350	0.024	0.210	0.005	3.770	3.747	3.750	3.410	3.375	3.378	3.715
341	X	3.475	0.024	0.210	0.005	3.895	3.872	3.875	3.535	3.500	3.503	3.840
342		3.600	0.028	0.210	0.005	4.020	3.997	4.000	3.660	3.625	3.628	3.965
343		3.725	0.028	0.210	0.005	4.145	4.122	4.125	3.785	3.750	3.753	4.090
344		3.850	0.028	0.210	0.005	4.270	4.247	4.250	3.910	3.875	3.878	4.215
345		3.975	0.028	0.210	0.005	4.395	4.372	4.375	4.035	4.000	4.003	4.340
346		4.100	0.028	0.210	0.005	4.520	4.497	4.500	4.160	4.125	4.128	4.465
347		4.225	0.030	0.210	0.005	4.645	4.622	4.625	4.285	4.250	4.253	4.590
348	X	4.350	0.030	0.210	0.005	4.773	4.747	4.750	4.410	4.375	4.378	4.717
349		4.475	0.030	0.210	0.005	4.895	4.872	4.875	4.535	4.500	4.503	4.840
350		4.600	0.030	0.210	0.005	5.020	4.997	5.000	4.660	4.625	4.628	4.965
351		4.725	0.030	0.210	0.005	5.145	5.122	5.125	4.785	4.750	4.753	5.090

*X = Standard Offering.

Those Piston O.D.'s shown in shaded area may over stretch the o-ring. If so, select a material with greater elongation or use a two-piece piston.

Parker Hannifin Corporation
Engineered Polymer Systems Division
Phone: 801 972 3000

Table 11-6. 568 Static O-ring Gland Dimensions — Inch (Continued)

O-ring 2-Size AS568	X*	Seal Dimensions					Piston			Rod		
		Inside Diameter	±	Width	±	Mean O.D. (Ref)	A	B	C	D	E	F
							Piston Diameter	Bore Diameter	Groove Diameter	Rod Diameter	Throat Diameter	Groove Diameter
							+.000/-.001	+.002/-.000	+.000/-.004	+.000/-.002	+.001/-.000	+.004/-.000
352		4.850	0.030	0.210	0.005	5.270	5.247	5.250	4.910	4.875	4.878	5.215
353		4.975	0.037	0.210	0.005	5.395	5.372	5.375	5.035	5.000	5.003	5.340
354		5.100	0.037	0.210	0.005	5.520	5.497	5.500	5.160	5.125	5.128	5.465
355		5.225	0.037	0.210	0.005	5.645	5.622	5.625	5.285	5.250	5.253	5.590
356		5.350	0.037	0.210	0.005	5.770	5.747	5.750	5.410	5.375	5.378	5.715
357		5.475	0.037	0.210	0.005	5.895	5.872	5.875	5.535	5.500	5.503	5.840
358		5.600	0.037	0.210	0.005	6.020	5.997	6.000	5.660	5.625	5.628	5.965
359		5.725	0.037	0.210	0.005	6.145	6.122	6.125	5.785	5.750	5.753	6.090
360		5.850	0.037	0.210	0.005	6.270	6.247	6.250	5.910	5.875	5.878	6.215
361		5.975	0.037	0.210	0.005	6.395	6.372	6.375	6.035	6.000	6.003	6.340
362		6.225	0.040	0.210	0.005	6.645	6.622	6.625	6.285	6.250	6.253	6.590
363		6.475	0.040	0.210	0.005	6.895	6.872	6.875	6.535	6.500	6.503	6.840
364		6.725	0.040	0.210	0.005	7.145	7.122	7.125	6.785	6.750	6.753	7.090
365		6.975	0.040	0.210	0.005	7.395	7.372	7.375	7.035	7.000	7.003	7.340
425		4.475	0.033	0.275	0.006	5.025	4.996	5.000	4.548	4.500	4.504	4.952
426		4.600	0.033	0.275	0.006	5.150	5.121	5.125	4.673	4.625	4.629	5.077
427		4.725	0.033	0.275	0.006	5.275	5.246	5.250	4.798	4.750	4.754	5.202
428		4.850	0.033	0.275	0.006	5.400	5.371	5.375	4.923	4.875	4.879	5.327
429		4.975	0.037	0.275	0.006	5.525	5.496	5.500	5.048	5.000	5.004	5.452
430		5.100	0.037	0.275	0.006	5.650	5.621	5.625	5.173	5.125	5.129	5.577
431		5.225	0.037	0.275	0.006	5.775	5.746	5.750	5.298	5.250	5.254	5.702
432	X	5.350	0.037	0.275	0.006	5.900	5.871	5.875	5.423	5.375	5.379	5.827
433		5.475	0.037	0.275	0.006	6.025	5.996	6.000	5.548	5.500	5.504	5.952
434		5.600	0.037	0.275	0.006	6.150	6.121	6.125	5.673	5.625	5.629	6.077
435		5.725	0.037	0.275	0.006	6.275	6.246	6.250	5.798	5.750	5.754	6.202
436		5.850	0.037	0.275	0.006	6.400	6.371	6.375	5.923	5.875	5.879	6.327
437		5.975	0.037	0.275	0.006	6.525	6.496	6.500	6.048	6.000	6.004	6.452
438		6.225	0.040	0.275	0.006	6.775	6.746	6.750	6.298	6.250	6.254	6.702
439		6.475	0.040	0.275	0.006	7.025	6.996	7.000	6.548	6.500	6.504	6.952
440		6.725	0.040	0.275	0.006	7.275	7.246	7.250	6.798	6.750	6.754	7.202
441		6.975	0.040	0.275	0.006	7.525	7.496	7.500	7.048	7.000	7.004	7.452

*X = Standard Offering.

Those Piston O.D.'s shown in shaded area may over stretch the o-ring. If so, select a material with greater elongation or use a two-piece piston.

NOTE: For sizes larger than those shown in the table, please contact your local Parker representative.

Parker Hannifin Corporation
Engineered Polymer Systems Division
Phone: 801 972 3000

Urethane Head Seal
HS Profile

HS Profile, Static Head Seal

As mobile equipment OEM's continue to consider warranty costs, one area of focus has been a review of down time related to cylinder head glands. Two of the most common seal failures on cylinder heads are o-ring back-up blow-out and pinched back-ups. Both failures are common in systems with high eccentricities or large extrusion gaps. To address these situations and to reduce down time HS Profile static head seals are specified to replace the industry-standard o-ring and back-up. Incorporating high performance plastics with a stable, symmetrical geometry, dramatically reduces the risks of installation damage and back-up blow-out. Both problems are eliminated with the HS Profile's one piece urethane design offering improved fit and a stable geometry.

Technical Data

Standard Materials*	Temperature	Pressure
P4700A90	-65°F to 200°F (-54°C to 93°C)	10,000 psi (688 bar) static

***Alternate Materials:** For applications that may require an alternate material, please contact your local Parker Seal representative.

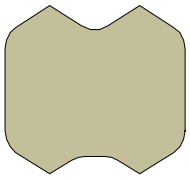

HS Cross Section

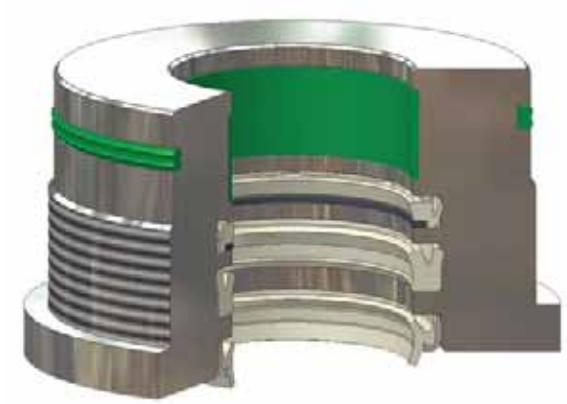

HS installed in Static Head Gland

Parker Hannifin Corporation
Engineered Polymer Systems Division
Phone: 801 972 3000

Part Number Nomenclature —HS Profile

Table 11-7. HS Profile — Inch

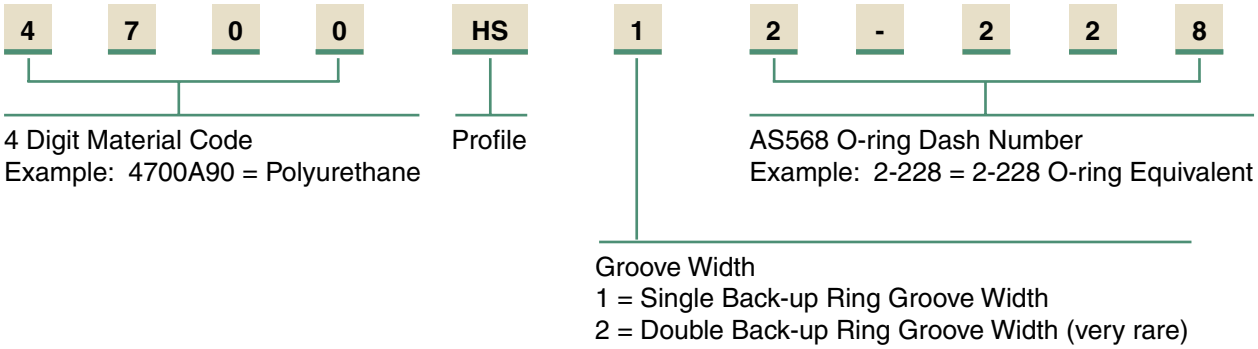

Gland Dimensions — HS Profile

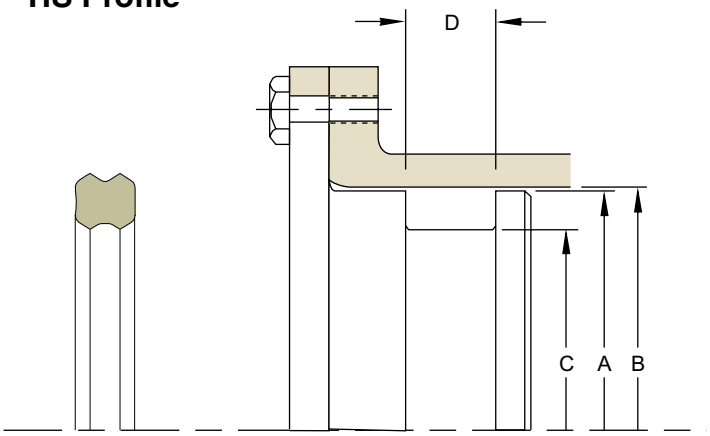

Table 11-8. HS Gland Dimensions — Inch

O-ring 2-Size AS568	Gland Dimensions				Part Number
	A Head Diameter	B Bore Diameter	C Groove Diameter	D Groove Width	
	+.000/-.001	+.002/-.000	+.000/-.002	+.005/-.000	
228	2.497	2.500	2.278	0.208	**4700HS12-228**
230	2.747	2.750	2.528	0.208	**4700HS12-230**
232	2.997	3.000	2.778	0.208	**4700HS12-232**
234	3.247	3.250	3.028	0.208	**4700HS12-234**
235	3.372	3.375	3.153	0.208	**4700HS12-235**
236	3.497	3.500	3.278	0.208	**4700HS12-236**
238	3.747	3.750	3.528	0.208	**4700HS12-238**
240	3.997	4.000	3.778	0.208	**4700HS12-240**
242	4.247	4.250	4.028	0.208	**4700HS12-242**
244	4.497	4.500	4.278	0.208	**4700HS12-244**
246	4.747	4.750	4.528	0.208	**4700HS12-246**
248	4.997	5.000	4.778	0.208	**4700HS12-248**
	+.000/-.001	+.002/-.000	+.000/-.004	+.005/-.000	
250	5.247	5.250	5.028	0.208	**4700HS12-250**
251	5.372	5.375	5.153	0.208	**4700HS12-251**

Parker Hannifin Corporation
Engineered Polymer Systems Division
Phone: 801 972 3000

Table 11-8. HS Gland Dimensions — Inch (Continued)

O-ring 2-Size AS568	Gland Dimensions				Part Number
	A Head Diameter	B Bore Diameter	C Groove Diameter	D Groove Width	
	+.000/-.001	+.002/-.000	+.000/-.004	+.005/-.000	
252	5.497	5.500	5.278	0.208	**4700HS12-252**
254	5.747	5.750	5.528	0.208	**4700HS12-254**
256	5.997	6.000	5.778	0.208	**4700HS12-256**
342	3.997	4.000	3.660	0.311	**4700HS12-342**
344	4.247	4.250	3.910	0.311	**4700HS12-344**
346	4.497	4.500	4.160	0.311	**4700HS12-346**
348	4.747	4.750	4.410	0.311	**4700HS12-348**
350	4.997	5.000	4.660	0.311	**4700HS12-350**
352	5.247	5.250	4.910	0.311	**4700HS12-352**
353	5.372	5.375	5.035	0.311	**4700HS12-353**
354	5.497	5.500	5.160	0.311	**4700HS12-354**
356	5.747	5.750	5.410	0.311	**4700HS12-356**
358	5.997	6.000	5.660	0.311	**4700HS12-358**
360	6.247	6.250	5.910	0.311	**4700HS12-360**

NOTE: For sizes larger than those shown in the table, please contact your local Parker Seal representative.

Parker Hannifin Corporation
Engineered Polymer Systems Division
Phone: 801 972 3000

Notes

Parker Hannifin Corporation
Engineered Polymer Systems Division
Phone: 801 972 3000

Fluid Power Seal Design Guide Appendix Table of Contents

Design Action Request Form — A

English/Metric Conversions — B

Custom Groove Calculations — C

Chemical Compatibility — D

ASTM D2000 Compatibility — E

ISO Gland Tolerances — F

Other Parker EPS Products — G

Parker Hannifin Corporation
Engineered Polymer Systems Division
Phone: 801 972 3000
Fax: 801 973 4019

www.parkerseals.com

Notes

Parker Hannifin Corporation
Engineered Polymer Systems Division
Phone: 801 972 3000

Design Action Request Form

NEED HELP? If you need assistance, please photocopy these pages. Fill out the required information and fax to 801 973 4019. Submit a sketch if necessary. Use the information below and other information in this catalog to determine the dimensions needed. We will contact you to discuss your specific application and make recommendations. If you need help filling out this form, please call Applications Engineering at 801 972 3000.

ENGINEERED POLYMER SYSTEMS DIVISION
DESIGN ACTION REQUEST

EPS Division
2220 South 3600 West
Salt Lake City, UT
Tel: (801) 972-3000
Fax: (801) 973-4019

Applications Engineering Use:
Project # _____
Date Entered _____
Date Required _____
Prepared by _____
Territory Mgr. _____
Distributor _____
_____
Dist. Sales _____

Referred by _____
Lead # _____

COMPANY: _____ FAX NUMBER: _____
ADDRESS: _____ P.O. BOX: _____ MAIL STOP: _____
CITY: _____ STATE: _____ ZIP: _____ COUNTRY: _____
CONTACT: _____ TITLE: _____ PHONE: _____ EXT: _____
ALT. CONTACT: _____ TITLE: _____ PHONE: _____ EXT: _____
E-MAIL: _____

EQUIPMENT/MANUFACTURER: _____ MODEL NO.: _____
EXISTING SEAL MANUFACTURER: _____ PART NO.: _____
REASON FOR CHANGE: ☐ PERFORMANCE ☐ DELIVERY ☐ NEW APPLICATION ☐ PRICE
CURRENT PRICE: _____ @ _____ PCS. MONTHLY USAGE: _____ HOURS OPERATION: _____ HOURS SERV. LIFE: _____
TARGET PRICE: _____ @ _____ PCS. QUOTE QTY.: _____ PROTO QTY.: _____ DATE PROTO REQ'D.: _____
SPECIAL INSPECTION REQUIREMENTS: ☐ YES ☐ NO SPECIAL PACKAGING REQUIREMENTS: ☐ YES ☐ NO
EXPLAIN: _____

MOTION

☐ STATIC ☐ RECIPROCATING ☐ OSCILLATORY ☐ ROTARY

PRODUCT TYPE

NON-ROTARY — FILL OUT SECOND PAGE

☐ ROD/SHAFT ☐ WIPER
☐ PISTON ☐ BEARING
☐ INTERNAL FACE ☐ VANE
☐ EXTERNAL FACE ☐ NON-SEAL

ROTARY — FILL OUT THIRD PAGE

☐ SOLID SEAL ☐ PTFE LIP SEAL
☐ SPLIT SEAL ☐ ELASTOMER LIP SEAL
☐ BEARING ISOLATOR

09/01/07

Design Action Request Form

A

OPERATING PARAMETERS	UNIT (CIRCLE ONE)	MINIMUM	OPERATING	MAXIMUM
TEMPERATURE:	°K °F °C	_____	_____	_____
PRESSURE:	PSI BAR MPA	_____	_____	_____
STROKE LENGTH (RECIPROCATING):	INCH MM	_____	_____	_____
CYCLE RATE:	CYCLES/MIN CYCLES/HR HZ	_____	_____	_____
DEGREE OF ARC (OSCILLATING):	DEGREES	_____	_____	_____
VELOCITY:	FT/MIN. MM/MIN.	_____	_____	_____
VACUUM:	IN HG TORR	_____	_____	_____
ROTARY SPEED	RPM	_____	_____	_____

MEDIA TO BE SEALED: _____

☐ **Rod**

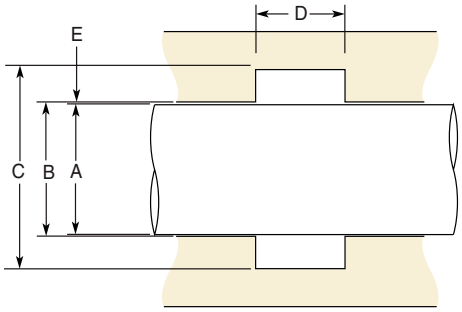

☐ **Piston**

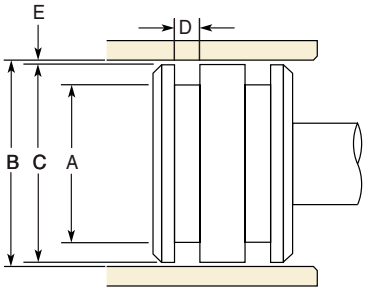

☐ **Face Seal**

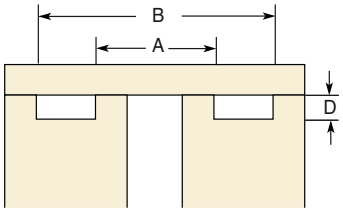

☐ **Other Piston**

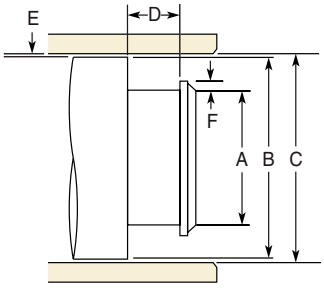

☐ **Other Rod**

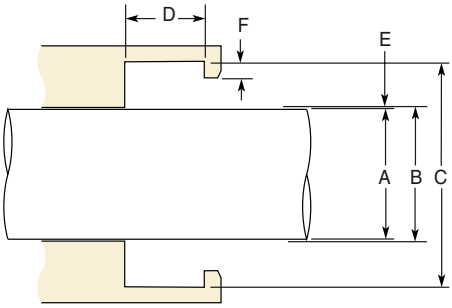

HARDWARE SPECIFICATIONS

HARDWARE DRAWINGS INCLUDED WITH DAR: ☐ YES ☐ NO

A DIAMETER:	MIN. _____	MAX. _____	HARDNESS _____	FINISH _____	MAT'L _____
B DIAMETER:	MIN. _____	MAX. _____	HARDNESS _____	FINISH _____	MAT'L _____
C DIAMETER:	MIN. _____	MAX. _____	HARDNESS _____	FINISH _____	MAT'L _____
D GROOVE WIDTH:	MIN. _____	MAX. _____	CAN HARDWARE BE CHANGED? ☐ YES ☐ NO		
E RADIAL CLEARANCE:	MIN. _____	MAX. _____	HOW? _____		
F ROD / PISTON STEP HEIGHT:	MIN. _____	MAX. _____			

SIDE LOAD (LBS. NEWTONS): _____

MIL-G-5514 O-RING DASH #: _____ BACK-UP WIDTH ____

AS4716 O-RING DASH #: _____ BACK-UP WIDTH ____

RUNOUT (TIR) _____

ECCENTRICITY _____

PERFORMANCE REQUIREMENTS
(CIRCLE ONE)

FRICTION: LBS OZ GMS BREAKOUT _____ DYNAMIC _____

EXPECTED LIFE: CYC HRS YRS _____

MAX. LEAKAGE: DROPS CC/MIN _____

MOST CRITICAL ASPECT: _____

CONTAMINATION: _____

GLAND TYPE

____ SPLIT ____ OPEN

METRIC

☐ YES

09/01/07

Parker Hannifin Corporation
Engineered Polymer Systems Division
Phone: 801 972 3000

English / Metric Conversions: Fractions

Fractional	Decimal	Metric
—	0.004	0.10
—	0.010	0.25
1/64	0.016	0.40
—	0.020	0.50
—	0.030	0.75
1/32	0.031	0.79
—	0.039	1.00
3/64	0.047	1.19
—	0.059	1.50
1/16	0.063	1.59
5/64	0.078	1.98
—	0.079	2.00
3/32	0.094	2.38
—	0.098	2.50
7/64	0.109	2.78
—	0.118	3.00
1/8	0.125	3.18
—	0.138	3.50
9/64	0.141	3.57
5/32	0.156	3.97
—	0.158	4.00
11/64	0.172	4.37
—	0.177	4.50
3/16	0.188	4.76
—	0.197	5.00
13/64	0.203	5.16
—	0.217	5.50
7/32	0.219	5.56
15/64	0.234	5.95
—	0.236	6.00
1/4	0.250	6.35
—	0.256	6.50
17/64	0.266	6.75
—	0.276	7.00
9/32	0.281	7.14
—	0.295	7.50
19/64	0.297	7.54
5/16	0.313	7.94
—	0.315	8.00
21/64	0.328	8.33
—	0.335	8.50
11/32	0.344	8.73
—	0.354	9.00
23/64	0.359	9.13
—	0.374	9.50
3/8	0.375	9.53
25/64	0.391	9.92
—	0.394	10.00
12/32	0.406	10.32
—	0.413	10.50
27/64	0.422	10.72
—	0.433	11.00
7/16	0.438	11.11
29/64	0.453	11.51
15/32	0.469	11.91
—	0.472	12.00
31/64	0.484	12.30
—	0.492	12.50
1/2	0.500	12.70
—	0.512	13.00
33/64	0.516	13.10
17/32	0.531	13.50
35/64	0.547	13.90
—	0.551	14.00
9/16	0.563	14.29
—	0.571	14.50

Fractional	Decimal	Metric
37/64	0.578	14.68
—	0.591	15.00
19/32	0.594	15.08
39/64	0.609	15.48
5/8	0.625	15.88
—	0.630	16.00
41/64	0.641	16.27
—	0.650	16.50
21/32	0.656	16.67
—	0.669	17.00
43/64	0.672	17.01
11/16	0.688	17.46
45/64	0.703	17.86
—	0.709	18.00
23/32	0.719	18.26
—	0.728	18.49
47/64	0.734	18.65
—	0.748	19.00
3/4	0.750	19.05
49/64	0.766	19.45
25/32	0.781	19.84
—	0.787	20.00
51/64	0.797	20.24
13/16	0.813	20.64
—	0.827	21.00
53/64	0.828	21.03
27/32	0.844	21.43
55/64	0.859	21.83
—	0.866	22.00
7/8	0.875	22.23
57/64	0.891	22.62
—	0.906	23.00
29/32	0.906	23.02
59/64	0.922	23.42
15/16	0.938	23.81
—	0.945	24.00
61/64	0.953	24.21
31/32	0.969	24.61
—	0.984	25.00
1	1.000	25.40
—	1.024	26.00
1 1/32	1.031	26.19
1 1/16	1.062	26.99
—	1.063	27.00
1 3/32	1.094	27.78
—	1.102	28.00
1 1/8	1.125	28.58
—	1.148	29.00
1 5/32	1.156	29.37
—	1.181	30.00
1 3/16	1.188	30.16
1 7/32	1.219	30.96
—	1.221	31.00
1 1/4	1.250	31.75
—	1.260	32.00
1 9/32	1.281	32.54
—	1.299	33.00
1 5/16	1.312	33.34
—	1.339	34.00
1 11/32	1.344	34.13
1 3/8	1.375	34.93
—	1.378	35.00
1 13/32	1.406	35.72
—	1.417	36.00
1 7/16	1.438	36.51
—	1.457	37.00

Fractional	Decimal	Metric
1 15/32	1.469	37.31
—	1.496	38.00
1 1/2	1.500	38.10
1 17/32	1.531	38.89
—	1.535	39.00
1 9/16	1.562	39.69
—	1.575	40.00
1 19/64	1.594	40.48
—	1.614	41.00
1 5/8	1.625	41.28
—	1.654	42.00
1 21/32	1.656	42.07
1 11/16	1.688	42.86
—	1.693	43.00
1 23/32	1.719	43.66
—	1.732	44.00
1 3/4	1.750	44.50
—	1.772	45.00
1 25/32	1.781	45.24
—	1.811	46.00
1 13/16	1.813	46.04
1 27/32	1.844	46.83
—	1.850	47.00
1 7/8	1.875	47.63
—	1.890	48.00
1 29/32	1.906	48.42
—	1.929	49.00
1 15/16	1.938	49.21
—	1.970	50.00
1 31/32	1.970	50.01
2	2.000	50.80
—	2.008	51.00
—	2.047	52.00
2 1/16	2.062	52.39
—	2.087	53.00
2 1/8	2.125	53.98
—	2.126	54.00
—	2.165	55.00
2 3/16	2.188	55.56
—	2.205	56.00
—	2.244	57.00
2 1/4	2.250	57.15
—	2.284	58.00
2 5/16	2.312	58.74
—	2.323	59.00
—	2.362	60.00
2 3/8	2.375	60.33
—	2.402	61.00
2 7/16	2.438	61.91
—	2.441	62.00
—	2.480	63.00
2 1/2	2.500	63.50
—	2.520	64.00
—	2.559	65.00
2 9/16	2.562	65.09
—	2.598	66.00
2 5/8	2.625	66.68
—	2.638	67.00
—	2.677	68.00
2 11/16	2.688	68.26
—	2.717	69.00
2 3/4	2.750	69.85
—	2.756	70.00
—	2.795	71.00
2 13/16	2.813	71.44
—	2.835	72.00

Fractional	Decimal	Metric
—	2.874	73.00
2 7/8	2.875	73.03
—	2.913	74.00
2 15/16	2.938	74.61
—	2.953	75.00
—	2.992	76.00
3	3.000	76.20
—	3.032	77.00
3 1/16	3.062	77.79
—	3.071	78.00
—	3.110	79.00
3 1/8	3.125	79.38
—	3.150	80.00
3 3/16	3.188	80.96
—	3.189	81.00
—	3.228	82.00
3 1/4	3.250	82.55
—	3.268	83.00
—	3.307	84.00
3 5/16	3.312	84.14
—	3.346	85.00
3 3/8	3.375	85.73
—	3.386	86.00
—	3.425	87.00
3 7/16	3.438	87.31
—	3.465	88.00
3 1/2	3.500	88.90
—	3.504	89.00
—	3.543	90.00
3 9/16	3.562	90.49
—	3.583	91.00
—	3.622	92.00
3 5/8	3.625	92.08
—	3.661	93.00
3 11/16	3.688	93.66
—	3.701	94.00
—	3.740	95.00
3 3/4	3.750	95.25
—	3.780	96.00
3 13/16	3.813	96.84
—	3.819	97.00
—	3.858	98.00
3 7/8	3.875	98.43
—	3.898	99.00
—	3.937	100.00
3 15/16	3.938	100.01
—	3.976	101.00
4	4.000	101.60
4 1/16	4.062	103.19
4 1/8	4.125	104.78
—	4.134	105.00
4 3/16	4.188	106.36
4 1/4	4.250	107.95
4 5/16	4.312	109.54
—	4.331	110.00
4 3/8	4.375	111.13
4 7/16	4.438	112.71
4 1/2	4.500	114.30
—	4.528	115.00
4 9/16	4.562	115.89
4 5/8	4.625	117.48
—	4.724	120.00
4 3/4	4.750	120.65
4 7/8	4.875	123.83
—	4.921	125.00
5	5.000	127.00

Parker Hannifin Corporation
Engineered Polymer Systems Division
Phone: 801 972 3000

B

RPM to FPM Conversion

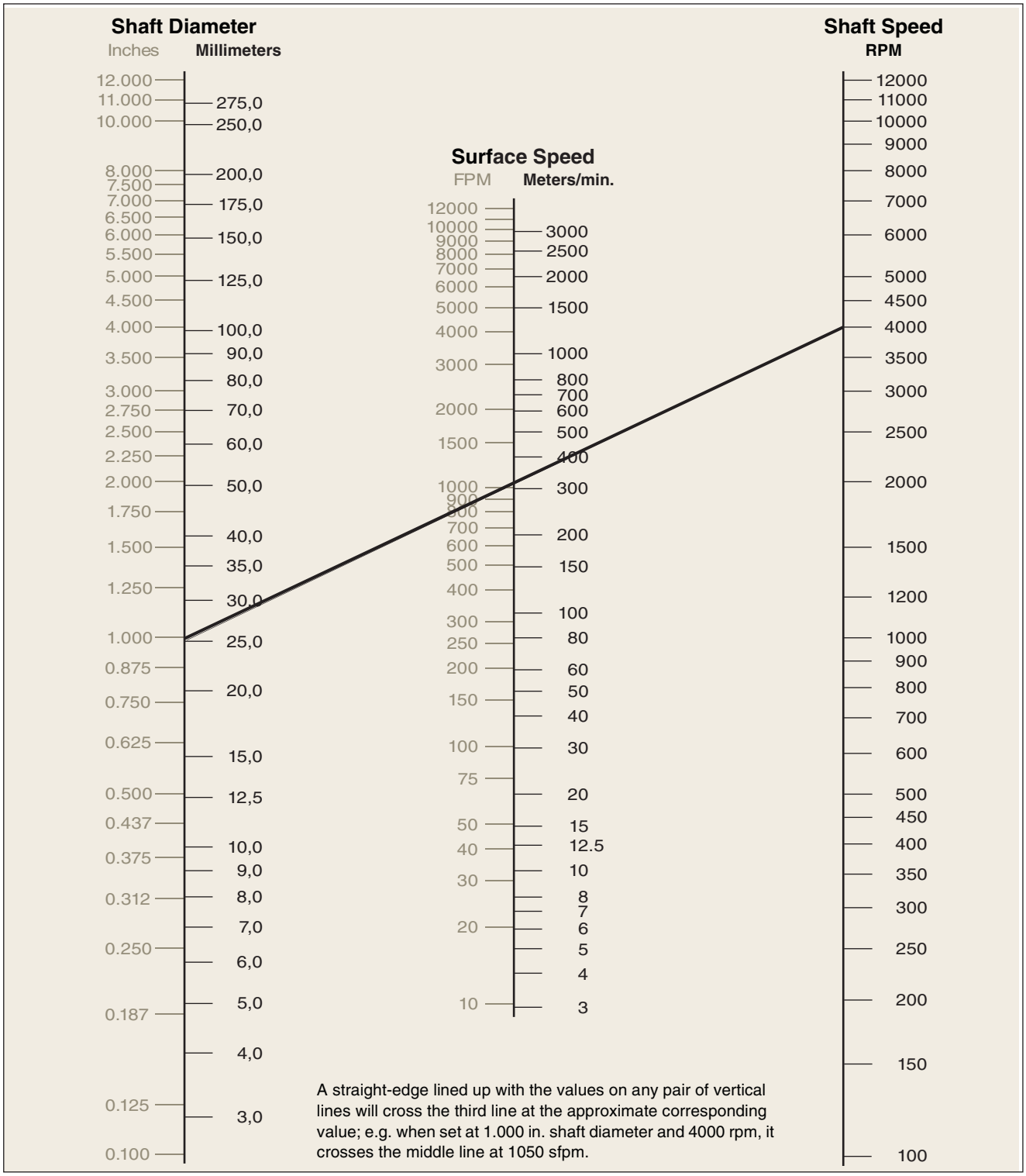

A straight-edge lined up with the values on any pair of vertical lines will cross the third line at the approximate corresponding value; e.g. when set at 1.000 in. shaft diameter and 4000 rpm, it crosses the middle line at 1050 sfpm.

Parker Hannifin Corporation
Engineered Polymer Systems Division
Phone: 801 972 3000

B

Pressure: PSI / Bar

1-40		41-80		81-200		205-500		510-900		910-1500	
psi	bar	psi	bar	psi	bar	psi	bar	psi	bar	psi	bar
1	0.07	41	2.83	81	5.59	205	14.13	510	35.17	910	62.76
2	0.14	42	2.90	82	5.65	210	14.48	520	35.86	920	63.45
3	0.21	43	2.97	83	5.72	215	14.82	530	36.55	930	64.14
4	0.28	44	3.03	84	5.79	220	15.17	540	37.24	940	64.83
5	0.34	45	3.10	85	5.86	225	15.51	550	37.92	950	65.52
6	0.41	46	3.17	86	5.93	230	15.86	560	38.62	960	66.21
7	0.48	47	3.24	87	6.00	235	16.20	570	39.31	970	66.90
8	0.55	48	3.31	88	6.07	240	16.55	580	40.00	980	67.59
9	0.62	49	3.38	89	6.14	245	16.89	590	40.69	990	68.28
10	0.69	50	3.45	90	6.21	250	17.24	600	41.37	1000	68.95
11	0.76	51	3.52	91	6.27	255	17.58	610	42.07	1010	69.66
12	0.83	52	3.59	92	6.34	260	17.93	620	42.76	1020	70.34
13	0.90	53	3.65	93	6.41	265	18.27	630	43.45	1030	71.03
14	0.97	54	3.72	94	6.48	270	18.62	640	44.14	1040	71.72
15	1.03	55	3.79	95	6.55	275	18.96	650	44.82	1050	72.41
16	1.10	56	3.86	96	6.62	280	19.31	660	45.52	1060	73.10
17	1.17	57	3.93	97	6.69	285	19.65	670	46.21	1070	73.79
18	1.24	58	4.00	98	6.76	290	20.20	680	43.90	1080	74.48
19	1.31	59	4.07	99	6.83	295	20.34	690	47.59	1090	75.17
20	1.38	60	4.14	100	6.90	300	20.69	700	48.27	1100	75.86
21	1.45	61	4.21	105	7.24	310	21.37	710	48.97	1120	77.24
22	1.52	62	4.28	110	7.58	320	22.06	720	49.66	1140	78.62
23	1.59	63	4.34	115	7.93	330	22.75	730	50.34	1160	80.00
24	1.65	64	4.41	120	8.27	340	23.44	740	51.03	1180	81.38
25	1.72	65	4.48	125	8.62	350	24.13	750	51.71	1200	82.76
26	1.79	66	4.55	130	8.89	360	24.82	760	52.41	1220	84.14
27	1.86	67	4.62	135	9.31	370	25.51	770	53.10	1240	85.52
28	1.93	68	4.69	140	9.65	380	26.21	780	53.79	1260	86.90
29	2.00	69	4.76	145	10.10	390	26.89	790	54.48	1280	88.28
30	2.07	70	4.83	150	10.34	400	27.85	800	55.16	1300	89.66
31	2.14	71	4.90	155	10.69	410	28.27	810	55.86	1320	91.03
32	2.21	72	4.97	160	11.03	420	28.96	820	56.55	1340	92.41
33	2.28	73	5.03	165	11.38	430	29.65	830	57.24	1360	93.79
34	2.34	74	5.10	170	11.72	440	30.34	840	57.93	1380	95.17
35	2.41	75	5.17	175	12.07	450	31.03	850	58.61	1400	96.55
36	2.48	76	5.24	180	12.41	460	31.72	860	59.31	1420	97.93
37	2.55	77	5.31	185	12.76	470	32.41	870	60.00	1440	99.31
38	2.62	78	5.38	190	13.10	480	33.10	880	60.69	1460	100.69
39	2.69	79	5.45	195	13.45	490	33.79	890	61.38	1480	102.07
40	2.76	80	5.52	200	13.79	500	34.48	900	62.06	1500	103.45

Parker Hannifin Corporation
Engineered Polymer Systems Division
Phone: 801 972 3000

B

Temperature: Celsius / Fahrenheit

Celsius	Fahrenheit
-169	-273
-168	-270
-162	-260
-157	-250
-151	-240
-146	-230
-140	-220
-134	-210
-129	-200
-123	-190
-118	-180
-112	-170
-107	-160
-101	-150
-96	-140
-90	-130
-84	-120
-79	-110
-73	-100
-68	-90
-62	-80
-57	-70
-51	-60
-46	-50
-40	-40
-34	-30
-29	-20
-23	-10
-17.8	0
-17.2	1
-16.7	2
-16.1	3
-15.6	4
-15	5
-14.4	6
-13.9	7
-13.3	8
-12.8	9
-12.2	10
-11.7	11
-11.1	12
-10.6	13
-10	14
-9.4	15
-8.9	16
-8.3	17

Celsius	Fahrenheit
-7.8	18
-7.2	19
-6.7	20
-6.1	21
-5.6	22
-5	23
-4.4	24
-3.9	25
-3.3	26
-2.8	27
-2.2	28
-1.7	29
-1.1	30
-0.6	31
0	32
0.6	33
1.1	34
1.7	35
2.2	36
2.8	37
3.3	38
3.9	39
4.4	40
5	41
5.6	42
6.1	43
6.7	44
7.2	45
7.8	46
8.3	47
8.9	48
9.4	49
10	50
10.6	51
11.1	52
11.7	53
12.2	54
12.8	55
13.3	56
13.9	57
14.4	58
15	59
15.6	60
16.1	61
16.7	62
17.2	63

Celsius	Fahrenheit
17.8	64
18.3	65
18.9	66
19.4	67
20	68
20.6	69
21.1	70
21.7	71
22.2	72
22.8	73
23.3	74
23.9	75
24.4	76
25	77
25.6	78
26.1	79
26.7	80
27.2	81
27.8	82
28.3	83
28.9	84
29.4	85
30	86
30.6	87
31.1	88
31.7	89
32.2	90
32.8	91
33.3	92
33.9	93
34.4	94
35	95
35.6	96
36.1	97
36.7	98
37.2	99
37.8	100
43	110
49	120
54	130
60	140
66	150
71	160
77	170
82	180
88	190

Celsius	Fahrenheit
93	200
99	210
100	212
104	220
110	230
116	240
121	250
127	260
132	270
138	280
143	290
149	300
154	310
160	320
166	330
171	340
177	350
182	360
188	370
193	380
199	390
204	400
210	410
216	420
221	430
227	440
232	450
238	460
243	470
249	480
254	490
260	500
266	510
271	520
277	530
282	540
288	550
293	560
299	570
304	580
310	590
316	600
321	610
327	620
332	630
338	640

Celsius	Fahrenheit
343	650
349	660
354	670
360	680
366	690
371	700
377	710
382	720
388	730
393	740
399	750
404	760
410	770
416	780
421	790
427	800
432	810
438	820
443	830
449	840
454	850
460	860
466	870
471	880
477	890
482	900
488	910
493	920
499	930
504	940
510	950
516	960
521	970
527	980
532	990
538	1000
549	1020
560	1040
571	1060
582	1080
593	1100
604	1120
616	1140
627	1160
638	1180
649	1200

Parker Hannifin Corporation
Engineered Polymer Systems Division
Phone: 801 972 3000

Custom Groove Dimensions

Contents

Piston Gland.....C-1
Rod Gland C-2
Wiper Gland.....C-2
Piston Wear Ring.....C-3
Rod Wear Ring C-3

There are times when using standard seal groove dimensions is not an option. Whether it is for cylinders that have been refinished or off sized metal, there are some simple calculations to use to determine what the appropriate groove dimensions should be. The formulas for calculating custom groove dimensions are included below.

Piston Gland Custom Groove Calculation

Subtract the standard bore diameter from the next smallest standard bore diameter to determine the Offset Factor. Apply the Offset Factor to the Groove Diameter, ***X***, and the Shoulder Diameter, ***Y***, as shown below. Groove Width, ***Z***, will remain unchanged.

Offset Factor Diameter:

$$\left(\begin{matrix}\textit{Offset}\\ \textit{Factor}\end{matrix}\right) = \left(\begin{matrix}\textit{Required}\\ \textit{Bore Diameter}\end{matrix}\right) - \left(\begin{matrix}\textit{Standard}\\ \textit{Bore Diameter}\end{matrix}\right)$$

New Groove Diameter, ***X***:

$$X = \left(\begin{matrix}\textit{Standard}\\ \textit{Groove Diameter}\end{matrix}\right) + \left(\begin{matrix}\textit{Offset}\\ \textit{Factor}\end{matrix}\right)$$

New Piston Diameter, ***Y***:

$$Y = \left(\begin{matrix}\textit{Standard}\\ \textit{Piston Diameter}\end{matrix}\right) + \left(\begin{matrix}\textit{Offset}\\ \textit{Factor}\end{matrix}\right)$$

If the required diameter is smaller than the standard diameter, a negative Offset Factor will be calculated, and the piston seal will be compressed. In most circumstances, Parker advises against compressing smaller sizes of piston seals to fit oversized bores. Please contact your local Parker representative for assistance in these cases.

IMPORTANT: It is necessary to calculate the additional stretch that the piston seal will be subjected to. Do this by using the equation below:

$$\left(\begin{matrix}\textit{Additional}\\ \textit{Stretch \%}\end{matrix}\right) = \left(\frac{\textit{Offset Factor}}{\textit{Standard Bore Diameter}}\right) \times 100$$

Parker recommends that the Additional Stretch Percentage not exceed 5%. If this percentage does exceed 5%, please contact your local Parker representative for assistance.

Parker Hannifin Corporation
Engineered Polymer Systems Division
Phone: 801 972 3000

Rod Seal and Rod Wiper Custom Groove Calculation

Subtract the required rod diameter from the next largest standard rod diameter to determine the Offset Factor. Apply the Offset Factor to the Groove Diameter, ***X***, and the Throat Diameter, ***Y***, as shown below. Groove Width, ***Z***, will remain unchanged.

Offset Factor Diameter

$$\left(\begin{matrix}\text{Offset}\\\text{Factor}\end{matrix}\right) = \left(\begin{matrix}\text{Standard}\\\text{Rod Diameter}\end{matrix}\right) - \left(\begin{matrix}\text{Required}\\\text{Rod Diameter}\end{matrix}\right)$$

New Groove Diameter, ***X***:

$$X = \left(\begin{matrix}\text{Standard}\\\text{Groove Diameter}\end{matrix}\right) - \left(\begin{matrix}\text{Offset}\\\text{Factor}\end{matrix}\right)$$

New Shoulder Diameter, ***Y***:

$$Y = \left(\begin{matrix}\text{Standard}\\\text{Shoulder Diameter}\end{matrix}\right) - \left(\begin{matrix}\text{Offset}\\\text{Factor}\end{matrix}\right)$$

If the required diameter is larger than the standard diameter, a negative Offset Factor will be calculated, and the rod seal will be stretched. In most circumstances, Parker advises against stretching smaller sizes of rod seals to fit oversized rods. Please contact your local Parker representative for assistance in these cases.

IMPORTANT: It is necessary to calculate the additional compression that the rod seal will be subjected to. Do this by using the equation below:

$$\left(\begin{matrix}\text{Additional}\\\text{Compression \%}\end{matrix}\right) = \left(\frac{\text{Offset Factor}}{\text{Standard Bore Diameter}}\right) \times 100$$

Parker recommends that the Additional Compression Percentage not exceed 2%. If this percentage does exceed 2%, please contact your local Parker representative for assistance.

Piston Wear Ring / Bearing Groove Calculation

The formula for calculating piston wear ring grooves using alternative extrusion gaps, metal-to-metal clearances and machining tolerances:

1. Maximum Groove Diameter, ***B***:

$$B = \left(\begin{matrix}\text{Minimum Bore}\\\text{Diameter, A}\end{matrix}\right) - .001'' = 2 \times \left(\begin{matrix}\text{Max. Cross}\\\text{Section}\end{matrix}\right)$$

2. Minimum Groove Diameter:

$$\left(\begin{matrix}\text{Minimum}\\\text{Groove Diameter}\end{matrix}\right) = B - \left(\begin{matrix}\text{Machining}\\\text{Tolerances}\end{matrix}\right)$$

3. Maximum Piston Diameter, ***C***:

$$C = \left(\begin{matrix}\text{Min. Groove}\\\text{Diameter}\end{matrix}\right) + 2 \times \left(\begin{matrix}\text{Min. Cross}\\\text{Section}\end{matrix}\right) - 2 \times \left(\begin{matrix}\text{Desired Min. Radial}\\\text{Metal-to-Metal Clearance}\end{matrix}\right)$$

4. ***D*** = (Nominal Width, ***W***) + .010"

$$D = \left(\text{Nominal Width, } W\right) + \left(.010''\right)$$

Notes:
1. Tolerance for dimension D is +.010" / -.000"
2. Groove radii must not exceed .015" max.
3. Parker recommends a minimum .005" radial metal-to-metal clearance. Using the above equations may result in metal-to-metal contact if the material's compressive properties are not considered, contact your local Parker representative for assistance.

Parker Hannifin Corporation
Engineered Polymer Systems Division
Phone: 801 972 3000

Rod Wear Ring Groove Calculation

The formula for calculating rod wear ring grooves using alternative extrusion gaps metal-to-metal clearances and machining tolerances:

5. Maximum Groove Diameter, ***B1***:

$$B1 = \begin{pmatrix}\text{Minimum Rod}\\ \text{Diameter, A1}\end{pmatrix} + .001'' = 2 \times \begin{pmatrix}\text{Max. Cross}\\ \text{Section}\end{pmatrix}$$

6. Maximum Groove Diameter:

$$\begin{pmatrix}\text{Minimum}\\ \text{Groove Diameter}\end{pmatrix} = B1 + \begin{pmatrix}\text{Machining}\\ \text{Tolerances}\end{pmatrix}$$

7. Miniimum Throat Diameter, ***C1***:

$$C1 = \begin{pmatrix}\text{Max. Groove}\\ \text{Diameter}\end{pmatrix} - 2 \times \begin{pmatrix}\text{Min. Cross}\\ \text{Section}\end{pmatrix} + 2 \times \begin{pmatrix}\text{Desired Min. Radial}\\ \text{Metal-to-Metal Clearance}\end{pmatrix}$$

8. ***D*** = (Nominal Width, ***W***) + .010"

$$D = \begin{pmatrix}\text{Nominal Width, W}\end{pmatrix} + \begin{pmatrix}.010''\end{pmatrix}$$

Notes:

5. Tolerance for dimension ***D*** is +.010" / -.000"
6. Groove radii must not exceed .015" max.
3. Parker recommends a minimum .005" radial metal-to-metal clearance. Using the above equations may result in metal-to-metal contact if the material's compressive properties are not considered, contact your local Parker representative for assistance.

Parker Hannifin Corporation
Engineered Polymer Systems Division
Phone: 801 972 3000

Notes

Parker Hannifin Corporation
Engineered Polymer Systems Division
Phone: 801 972 3000

Chemical Compatibility Chart

	Points Change Hardness	Percent Change				
		100% Modulas (PSI)	Tensile Strength (PSI)	Elongation (%)	Weight	Volume
Reference Fuel A						
P4300A90	-1	-6	8	1	2	4
P4301A90	0	-5	7	7	2	3
P4304D60	-1	-2	7	-1	1	1
P4311A90	0	3	7	5	2	3
P4500A90	-1	-8	-4	-3	1	2
P6000A90	-1	6	2	-1	1	1
Z4651D60	2	-1	22	-1	2	4
Z4652D65	1	3	-1	3	-2	-1
Z4653D60	-2	-3	-4	25	1	2
N4115A75	-3	2	-12	-18	0	2
N4180A80	-1	-2	-5	-12	0	1
N4181A80	-6	3	-10	-12	2	4
N4121A90	-1	-5	-4	-12	1	1
N4008A80	-5	1	-9	-9	2	6
N0304A75	-5	-2	-25	-20	-2	2
N4257A85	2	11	-10	-23	0	0
N4274A85	0	4	3	5	1	1
N4263A90	-2	-10	1	18	1	1
KB162A80	-2	7	-4	-9	1	1
KB163A90	-3	-6	-6	-1	1	1
N4007A95	0	-2	-6	8	1	2
E4183A80	-21	–	-61	-54	57	93
E4207A90	-3	-18	-15	5	-1	-1
E4259A80	-9	1	-31	-17	24	37
E4270A90	-6	–	-58	-53	43	69
V4205A75	-1	6	11	4	0	0
V4208A90	-2	-2	-10	-6	1	2
V4266A95	0	-5	-2	3	1	2
V4276A85	-9	-59	-38	28	10	22

	Points Change Hardness	Percent Change				
		100% Modulas (PSI)	Tensile Strength (PSI)	Elongation (%)	Weight	Volume
MIL-H-5606						
P4300A90	0	0	35	-15	5	7
P4301A90	-1	-6	0	7	6	8
P4304D60	-3	-2	14	5	5	7
P4311A90	-1	3	8	3	7	9
P4500A90	-3	-8	10	-1	7	9
P6000A90	-3	-3	33	13	6	8
Z4651D60	-2	-1	12	4	7	9
Z4652D65	0	0	12	4	6	8
Z4653D60	-6	1	8	32	7	10
N4115A75	-1	28	10	-24	4	7
N4180A80	-9	5	11	-17	5	8
N4181A80	-12	-6	-16	-24	15	21
N4121A90	-2	13	-3	-28	6	11
N4008A80	-9	16	-18	-32	11	18
N0304A75	-11	20	-20	-31	8	15
N4257A85	1	49	9	-29	2	4
N4274A85	-7	12	17	6	4	6
N4263A90	0	12	17	-2	5	7
KB162A80	-5	-10	-14	-10	10	13
KB163A90	-7	-8	-8	-2	8	11
N4007A95	-2	0	-4	-8	6	9
E4183A80	-25	-58	-67	-57	95	133
E4207A90	-22	–	-68	-58	71	100
E4259A80	-23	–	-70	-66	104	126
E4270A90	-18	–	-53	-54	73	94
V4205A75	-2	1	-11	-4	1	2
V4208A90	-5	-2	-15	-10	2	4
V4266A95	-1	-21	-21	-11	1	3
V4276A85	-7	-46	-13	47	16	25

Parker Hannifin Corporation
Engineered Polymer Systems Division
Phone: 801 972 3000

Chemical Compatibility

D

	Points Change Hardness	Percent Change				
		100% Modulas (PSI)	Tensile Strength (PSI)	Elongation (%)	Weight	Volume
Reference Fuel B						
P4300A90	-1	-4	-3	-15	13	18
P4301A90	-1	-12	-27	-9	17	24
P4304D60	-3	-10	-9	-3	8	11
P4311A90	-2	0	-12	-2	13	18
P4500A90	-3	-16	-36	-9	12	17
P6000A90	-3	-13	-30	2	10	14
Z4651D60	-3	-9	-6	-7	7	10
Z4652D65	-4	-9	6	4	0	2
Z4653D60	-7	-5	-8	17	7	10
N4115A75	-9	1	-15	-22	7	13
N4180A80	-10	-12	-19	-29	10	18
N4181A80	-12	-9	-41	-36	20	30
N4121A90	-15	-14	-20	-20	10	17
N4008A80	-10	7	-32	-38	22	38
N0304A75	-15	-10	-51	-40	5	12
N4257A85	-19	-28	-34	-28	13	21
N4274A85	-16	-43	-26	4	17	26
N4263A90	-14	-52	-18	37	15	24
KB162A80	-7	–	-50	-43	16	23
KB163A90	-17	–	-34	-19	14	22
N4007A95	-8	-14	-24	-8	8	10
E4183A80	-20	-5	-56	-53	71	108
E4207A90	-5	-8	-13	-5	-1	-1
E4259A80	-7	0	-4	-4	18	28
E4270A90	-17	–	-53	-33	24	36
V4205A75	-4	9	1	-3	0	1
V4208A90	-4	-6	-17	-9	1	3
V4266A95	-2	-5	-5	4	1	2
V4276A85	-19	-57	-52	1	15	32

	Points Change Hardness	Percent Change				
		100% Modulas (PSI)	Tensile Strength (PSI)	Elongation (%)	Weight	Volume
Jet Oil II						
P4300A90	-1	-3	18	-6	10	12
P4301A90	-1	-9	-2	6	13	15
P4304D60	0	-4	-1	5	5	6
P4311A90	-4	0	16	7	11	13
P4500A90	-3	-7	24	1	10	12
P6000A90	-3	-1	46	14	9	10
Z4651D60	0	-5	-3	-5	7	9
Z4652D60	1	1	1	6	5	6
Z4653D60	-6	3	6	30	6	7
N4115A75	-7	23	12	-21	18	24
N4180A80	-16	-1	10	-2	20	26
N4181A80	-14	-9	-16	-17	31	37
N4121A90	-12	3	2	-16	16	22
N4008A80	-12	17	-15	-30	29	38
N0304A75	-16	28	-31	-43	28	36
N4257A85	-2	40	12	-25	10	11
N4274A85	-3	16	17	0	12	13
N4263A90	-4	-2	9	-3	12	15
KB162A80	-6	-5	-11	-7	14	17
KB163A90	-8	-5	-9	-2	12	15
N4007A95	-20	-8	0	-15	14	18
E4183A80	-11	-11	-5	-4	8	9
E4207A90	-8	–	-19	-15	8	9
E4259A80	-10	3	-8	-8	11	13
E4270A90	-8	-2	0	1	10	11
V4205A75	-6	-2	-34	-16	6	11
V4208A90	-9	-2	-10	-8	5	10
V4266A95	-3	-9	-7	6	4	8
V4276A85	-1	-34	-11	32	5	7

Parker Hannifin Corporation
Engineered Polymer Systems Division
Phone: 801 972 3000

	Points Change Hardness	Percent Change				
		100% Modulas (PSI)	Tensile Strength (PSI)	Elongation (%)	Weight	Volume
Reference Fuel C						
P4300A90	-2	-3	-30	-35	21	29
P4301A90	-2	-13	-26	-6	25	35
P4304D60	-6	-10	-16	-11	11	15
P4311A90	-2	-1	-28	-6	20	27
P4500A90	-5	-17	-38	-11	17	24
P6000A90	-4	-16	-34	1	15	20
Z4651D60	-9	-14	-12	-8	16	22
Z4652D65	-4	-13	4	5	1	2
Z4653D60	-11	-6	-10	11	9	13
N4115A75	-12	-2	-18	-27	15	26
N4180A80	-10	-8	-24	-34	17	29
N4181A80	-17	-10	-50	-44	38	55
N4121A90	-18	-17	-32	-32	12	20
N4008A80	-15	-	-35	-46	41	68
N0304A75	-20	-30	-70	-54	9	18
N4257A85	-19	-32	-39	-33	21	31
N4274A85	-20	-42	-37	-12	26	39
N4263A90	-16	-52	-21	29	23	36
KB162A80	-12	–	-49	-40	20	30
KB163A90	-22	–	-38	-22	18	28
N4007A95	-18	–	-17	-31	29	44
E4183A80	-23	-23	-64	-53	77	112
E4207A90	-5	5	0	-4	-1	-1
E4259A80	-7	-8	-15	-7	18	26
E4270A90	-16	–	-52	-38	26	38
V4205A75	-3	12	-8	-7	1	2
V4208A90	-5	-3	-18	-13	2	5
V4266A95	-2	-6	-4	-7	2	4
V4276A85	-19	-58	-56	-12	16	33

	Points Change Hardness	Percent Change				
		100% Modulas (PSI)	Tensile Strength (PSI)	Elongation (%)	Weight	Volume
Stauffer 7700						
P4300A90	-1	-3	23	-10	9	10
P4301A90	-2	-9	-14	0	11	14
P4304D60	2	-3	6	8	5	6
P4311A90	-2	-2	-1	0	9	11
P4500A90	-3	-6	15	-4	9	11
P6000A90	-3	0	14	9	7	9
Z4651D60	-1	-6	6	-2	8	9
Z4652D65	-3	1	8	9	5	6
Z4653D60	-5	4	7	31	6	8
N4115A75	-9	16	3	-24	18	25
N4180A80	-17	-5	6	-14	18	26
N4181A80	-16	-10	-26	-24	31	37
N4121A90	-14	0	5	-13	15	22
N4008A80	-13	15	-25	-36	32	43
N0304A75	-18	19	-48	-45	31	42
N4257A85	-1	45	8	-36	8	10
N4274A85	-5	26	21	-4	9	11
N4263A90	-3	-2	11	-3	12	16
KB162A80	-6	-7	-16	-13	13	17
KB163A90	-9	-3	-7	-2	10	14
N4007A95	-21	1	-9	-15	14	18
E4183A80	-17	-18	-20	-19	22	27
E4207A90	-14	–	-40	-28	16	20
E4259A80	-16	10	-35	-25	24	28
E4270A90	-10	–	-16	-5	17	20
V4205A75	-7	-7	-22	-10	6	11
V4208A90	-10	-11	-25	-15	6	11
V4266A95	-3	-10	-11	1	4	8
V4276A85	-5	-41	-24	7	7	11

Parker Hannifin Corporation
Engineered Polymer Systems Division
Phone: 801 972 3000

Chemical Compatibility

D

	Points Change Hardness	Percent Change				
		100% Modulas (PSI)	Tensile Strength (PSI)	Elongation (%)	Weight	Volume
Methanol						
P4300A90	-3	-25	-16	-17	12	18
P4301A90	-1	-35	-23	7	10	14
P4304D60	-13	-32	-25	-3	11	15
P4311A90	-3	-20	-19	6	12	17
P4500A90	-4	-29	-52	-8	9	13
P6000A90	-5	-28	-46	3	8	12
Z4651D60	-5	-16	-5	-4	7	11
Z4652D65	-3	-18	-7	7	-1	-1
Z4653D60	-5	-4	-3	19	4	5
N4115A75	-1	2	-10	-14	-2	-1
N4180A80	0	-12	-9	-17	2	4
N4181A80	-4	-12	-27	-24	7	11
N4121A90	-6	-16	-18	-14	2	5
N4008A80	0	-1	-8	-5	-3	-3
N0304A75	-3	-9	-21	-13	-3	-2
N4257A85	-16	-37	-34	-22	6	10
N4274A85	-19	-57	-40	-1	8	13
N4263A90	-12	-52	-24	-44	15	33
KB162A80	-7	-12	-30	-23	6	9
KB163A90	-9	-21	-26	-7	5	8
N4007A95	-2	0	-17	8	5	9
E4183A80	0	0	-2	-3	0	0
E4207A90	-2	3	4	3	-1	-1
E4259A80	n/a	n/a	n/a	n/a	n/a	n/a
E4270A90	-16	-8	-7	0	1	1
V4205A75	0	-17	-16	0	6	13
V4208A90	-24	-26	-58	-41	23	53
V4266A95	-13	-	-44	-32	15	33
V4276A85	4	-8	-7	15	1	1

	Points Change Hardness	Percent Change				
		100% Modulas (PSI)	Tensile Strength (PSI)	Elongation (%)	Weight	Volume
Rando HD 32						
P4300A90	0	0	17	3	2	2
P4301A90	0	-1	1	-4	2	3
P4304D60	2	-2	13	9	1	2
P4311A90	-1	2	15	7	2	2
P4500A90	-2	3	43	4	1	1
P6000A90	-2	2	12	10	1	2
Z4651D60	2	-2	12	0	2	3
Z4652D65	-1	4	5	0	1	2
Z4653D60	-3	6	-1	21	2	4
N4115A75	9	66	10	-30	-5	-5
N4180A80	-3	19	12	-19	0	0
N4181A80	-3	10	-7	-17	5	6
N4121A90	0	23	0	-27	0	1
N4008A80	-1	22	-9	-28	3	5
N0304A75	7	55	0	-34	-3	-2
N4257A85	3	113	24	-33	-3	-4
N4274A85	2	45	23	5	-1	-2
N4263A90	3	33	25	-19	-1	-1
KB162A80	1	3	3	1	2	3
KB163A90	-2	9	7	4	2	2
N4007A95	1	7	0	-8	1	2
E4183A80	-25	13	-51	-49	76	106
E4207A90	-22	–	-60	-48	56	79
E4259A80	-24	–	-68	-57	86	106
E4270A90	-16	–	-48	-40	57	74
V4205A75	-1	6	-8	-10	0	0
V4208A90	-3	-2	-14	-12	1	2
V4266A95	0	-1	3	4	1	2
V4276A85	2	-20	-15	-15	2	3

Parker Hannifin Corporation
Engineered Polymer Systems Division
Phone: 801 972 3000

	Points Change Hardness	Percent Change				
		100% Modulas (PSI)	Tensile Strength (PSI)	Elongation (%)	Weight	Volume
JP-4 Jet Fuel						
P4300A90	0	-3	5	-8	8	11
P4301A90	0	-13	-5	9	9	12
P4304D60	-2	-7	0	1	4	5
P4311A90	-1	-4	-9	4	7	10
P4500A90	-2	-91	-92	-7	6	9
P6000A90	-3	-6	-14	0	4	5
Z4651D60	-3	-9	-1	-5	7	11
Z4652D65	2	-3	9	8	1	1
Z4653D60	-4	-3	2	31	4	7
N4115A75	-7	-2	-15	-20	3	8
N4180A80	0	-9	-5	-6	6	11
N4181A80	-10	-12	-26	-19	14	22
N4121A90	-11	-9	-10	-10	11	16
N4008A80	-10	3	-30	-35	14	26
N0304A75	-11	-8	-30	-23	4	10
N4257A85	-8	-26	-25	-19	7	11
N4274A85	-13	-36	-17	8	8	12
N4263A90	-6	-39	-8	37	7	12
KB162A80	-11	-2	-16	-17	5	7
KB163A90	-15	-18	-23	-7	5	8
N4007A95	-7	-3	-14	-8	9	15
E4183A80	-22	–	-72	-62	84	134
E4207A90	-7	11	7	-5	8	12
E4259A80	-17	6	-49	-33	57	74
E4270A90	-18	–	-63	-51	–	–
V4205A75	1	1	8	0	0	0
V4208A90	-4	-1	-16	-11	1	2
V4266A95	-1	-3	8	2	1	2
V4276A85	-6	-52	-42	24	8	15

	Points Change Hardness	Percent Change				
		100% Modulas (PSI)	Tensile Strength (PSI)	Elongation (%)	Weight	Volume
EAL 224 Rapeseed Oil						
P4300A90	-1	-2	16	-1	2	2
P4301A90	0	-3	1	4	2	3
P4304D60	3	-4	6	7	2	2
P4311A90	-2	2	-11	16	3	3
P4500A90	-1	-2	5	12	2	2
P6000A90	-2	3	-10	13	1	2
Z4651D60	2	-1	-8	-1	2	3
Z4652D65	-1	3	6	4	2	2
Z4653D60	-4	5	3	23	3	4
N4115A75	-1	20	12	-12	1	3
N4180A80	-7	3	9	-5	0	1
N4181A80	-7	-7	-6	-3	11	14
N4121A90	-4	9	3	-10	2	5
N4008A80	-7	4	-22	-27	10	16
N0304A75	-6	7	-3	-18	1	6
N4257A85	5	69	9	-27	-3	-4
N4274A85	2	4	16	31	-2	-2
N4263A90	3	15	15	10	-1	-1
KB162A80	-2	-1	6	6	8	11
KB163A90	-6	-4	-2	5	8	10
N4007A95	-3	-2	4	15	1	2
E4183A80	-20	-18	-30	-28	26	35
E4207A90	-16	–	-41	-22	19	27
E4259A80	-19	-5	-41	-23	28	35
E4270A90	-11	-7	-17	-9	18	22
V4205A75	-1	3	-8	-7	0	0
V4208A90	-3	0	-12	-6	1	2
V4266A95	0	-1	1	9	1	1
V4276A85	5	-15	-5	34	1	1

Parker Hannifin Corporation
Engineered Polymer Systems Division
Phone: 801 972 3000

Chemical Compatibility

D

	Points Change Hardness	Percent Change				
		100% Modulas (PSI)	Tensile Strength (PSI)	Elongation (%)	Weight	Volume
JA Jet Fuel						
P4300A90	1	-3	19	-7	6	8
P4301A90	0	-10	2	9	5	7
P4304D60	0	-5	2	-1	2	3
P4311A90	-2	-5	2	10	5	7
P4500A90	-2	-10	-17	-6	4	6
P6000A90	-2	-7	3	4	3	4
Z4651D60	-1	-8	12	0	5	7
Z4652D65	4	-3	12	7	0	1
Z4653D60	-4	-2	3	30	3	4
N4115A75	4	-3	-13	-17	5	8
N4180A80	-3	-11	-3	-7	4	6
N4181A80	-8	-14	-17	-11	10	15
N4121A90	-6	-3	-13	-19	5	13
N4008A80	-8	0	-22	-25	13	22
N0304A75	-11	-13	-24	-18	7	13
N4257A85	-3	-3	-8	-10	2	3
N4274A85	-1	-12	2	13	3	5
N4263A90	-2	-22	-1	27	4	5
KB162A80	-1	7	-9	-11	3	4
KB163A90	-3	-13	-9	10	4	5
N4007A95	0	12	-1	8	4	5
E4183A80	-22	–	-72	-66	93	141
E4207A90	-7	–	-52	-41	39	60
E4259A80	-23	–	-70	-60	109	131
E4270A90	-15	–	-63	-59	–	–
V4205A75	-1	5	-9	-8	0	1
V4208A90	-6	0	-12	-8	1	2
V4266A95	-1	-4	9	13	1	2
V4276A85	2	-9	-5	12	1	2

	Points Change Hardness	Percent Change				
		100% Modulas (PSI)	Tensile Strength (PSI)	Elongation (%)	Weight	Volume
Ethylene Glycol 97%						
P4300A90	-2	-16	-30	-6	5	5
P4301A90	-1	-19	-32	9	3	4
P4304D60	-1	-17	-38	7	5	5
P4311A90	-3	-8	-52	18	6	6
P4500A90	-4	-16	-47	20	5	5
P6000A90	-2	-16	-59	12	5	6
Z4651D60	-1	-8	-5	1	3	3
Z4652D65	-2	-7	-21	8	3	3
Z4653D60	-4	2	-37	-14	1	1
N4115A75	3	36	4	-24	0	1
N4180A80	-1	15	9	-14	-1	-1
N4181A80	-2	18	-4	-15	6	7
N4121A90	1	8	-2	-18	-2	-2
N4008A80	3	12	-10	-24	-2	-2
N0304A75	1	37	-8	-26	-4	-4
N4257A85	0	34	-9	-37	4	3
N4274A85	-2	8	7	10	7	7
N4263A90	3	4	6	3	2	3
KB162A80	1	4	5	3	3	3
KB163A90	0	-3	-2	4	3	3
N4007A95	-2	8	4	0	2	2
E4183A80	0	-3	-11	-11	-1	-1
E4207A90	-2	-2	8	5	-1	-1
E4259A80	-2	-2	5	3	1	1
E4270A90	-2	4	15	13	1	1
V4205A75	-3	-5	-20	1	1	1
V4208A90	-3	-10	-27	-5	2	3
V4266A95	-1	-21	-20	10	1	2
V4276A85	4	-13	-7	30	2	1

Parker Hannifin Corporation
Engineered Polymer Systems Division
Phone: 801 972 3000

	Points Change Hardness	Percent Change				
		100% Modulas (PSI)	Tensile Strength (PSI)	Elongation (%)	Weight	Volume
ASTM Oil #1						
P4300A90	1	-2	-4	-1	0	1
P4301A90	0	-2	3	8	0	1
P4304D60	-1	0	3	4	0	0
P4311A90	-1	3	11	3	0	0
P4500A90	-1	-1	31	3	0	0
P6000A90	-2	7	29	9	0	1
Z4651D60	4	2	6	1	0	0
Z4652D65	1	6	1	2	0	0
Z4653D60	-5	4	-2	28	1	1
N4115A75	12	88	16	-30	-7	-9
N4180A80	-3	26	14	-15	-3	-3
N4181A80	0	30	0	-22	1	1
N4121A90	0	13	4	-17	-3	-3
N4008A80	5	15	-25	-36	-5	-5
N0304A75	11	72	4	-27	-7	-9
N4257A85	5	102	18	-28	-5	-7
N4274A85	2	53	22	4	-4	-5
N4263A90	5	35	20	-29	-3	-4
KB162A80	2	2	-12	-15	0	-1
KB163A90	-1	6	4	2	0	-1
N4007A95	-2	5	-4	-15	-1	-1
E4183A80	-24	1	-40	-39	65	88
E4207A90	-18	–	-38	-32	43	60
E4259A80	-22	–	-56	-47	67	84
E4270A90	-17	–	-26	-26	45	58
V4205A75	-3	3	-1	-7	0	0
V4208A90	-3	-2	-17	-11	1	2
V4266A95	0	-4	1	7	1	2
V4276A85	5	-6	2	26	1	1

	Points Change Hardness	Percent Change				
		100% Modulas (PSI)	Tensile Strength (PSI)	Elongation (%)	Weight	Volume
Distilled Water						
P4300A90	-1	-14	-3	3	1	1
P4301A90	-1	-18	-26	14	1	1
P4304D60	-5	-18	-28	16	2	2
P4311A90	-2	0	-31	19	0	1
P4500A90	-5	-19	-49	38	1	2
P6000A90	-2	-17	-65	9	1	2
Z4651D60	-3	-9	2	1	1	1
Z4652D65	2	2	-1	2	0	0
Z4653D60	-5	0	-26	-10	1	1
N4115A75	2	24	3	-28	3	3
N4180A80	-1	14	6	-24	1	2
N4181A80	-7	11	-4	-14	9	11
N4121A90	1	19	2	-24	1	1
N4008A80	0	19	-8	-19	1	1
N0304A75	4	35	-5	-23	1	1
N4257A85	-2	3	-9	-21	8	9
N4274A85	-7	-13	-6	-1	13	15
N4263A90	-2	-9	6	21	4	4
KB162A80	3	11	5	-1	1	1
KB163A90	-3	0	4	4	1	1
N4007A95	-2	4	1	15	2	1
E4183A80	-3	-4	-14	-14	0	-1
E4207A90	-2	4	3	-2	1	0
E4259A80	-3	0	14	8	1	1
E4270A90	-3	2	23	26	1	0
V4205A75	-1	3	-8	0	2	3
V4208A90	-6	-5	15	7	3	4
V4266A95	-3	-15	16	11	1	2
V4276A85	-3	-21	1	28	5	6

Parker Hannifin Corporation
Engineered Polymer Systems Division
Phone: 801 972 3000

Chemical Compatibility

D

	Points Change Hardness	Percent Change				
		100% Modulas (PSI)	Tensile Strength (PSI)	Elongation (%)	Weight	Volume
IRM Oil 903						
P4300A90	-1	-6	-28	-10	8	9
P4301A90	-2	-8	0	14	9	12
P4304D60	-1	-1	11	8	5	6
P4311A90	-2	-1	19	0	6	7
P4500A90	-3	-4	19	-1	6	7
P6000A90	-2	0	40	15	5	6
Z4651D60	0	-2	13	0	8	10
Z4652D65	-4	4	10	7	5	7
Z4653D60	-7	4	7	26	6	8
N4115A75	-1	26	5	-21	3	4
N4180A80	-13	-2	10	-14	8	11
N4181A80	-10	-2	-9	-13	15	19
N4121A90	-5	8	1	-10	5	8
N4008A80	-12	11	-12	-23	18	26
N0304A75	-6	24	1	-23	7	11
N4257A85	1	50	11	-16	5	6
N4274A85	0	15	18	2	7	8
N4263A90	0	2	14	8	7	9
KB162A80	-4	-3	-11	-10	8	10
KB163A90	-6	-2	-4	-1	7	9
N4007A95	-10	-6	2	-8	10	14
E4183A80	-24	–	-62	-55	93	122
E4207A90	-21	–	-60	-55	68	91
E4259A80	-22	–	-71	-57	107	128
E4270A90	-16	–	-43	-44	70	85
V4205A75	-3	3	-15	-10	1	1
V4208A90	-3	-3	-17	-11	1	3
V4266A95	0	-7	-6	6	1	1
V4276A85	-1	-41	-20	31	4	11

	Points Change Hardness	Percent Change				
		100% Modulas (PSI)	Tensile Strength (PSI)	Elongation (%)	Weight	Volume
Oven Air Aged						
P4300A90	0	2	21	-3	0	–
P4301A90	0	1	2	-1	0	–
P4304D60	-2	0	5	3	0	0
P4311A90	-1	3	2	-1	0	0
P4500A90	-3	0	6	-5	0	0
P6000A90	-1	6	10	2	0	0
Z4651D60	0	2	10	-1	0	–
Z4652D65	4	4	3	2	0	0
Z4653D60	-2	3	-2	21	0	1
N4115A75	11	101	6	-44	-3	-4
N4180A80	5	59	14	-34	-2	-2
N4181A80	5	148	-43	-72	-1	-2
N4121A90	4	52	17	-33	-2	-3
N4008A80	13	44	11	-19	-3	-4
N0304A75	11	98	-1	-40	-4	-6
N4257A85	6	103	36	-23	-5	-7
N4274A85	3	89	29	-25	-4	-5
N4263A90	5	-	37	-44	-4	-6
KB162A80	4	15	5	-1	0	0
KB163A90	0	13	-9	-18	-1	-1
N4007A95	1	12	2	8	-2	–
E4183A80	1	3	-16	-17	-2	-3
E4207A90	0	-6	-11	-5	-1	-2
E4259A80	0	4	7	4	-1	-1
E4270A90	-6	9	8	-4	0	0
V4205A75	1	9	17	-3	0	0
V4208A90	-2	0	-9	-7	1	1
V4266A95	0	3	14	7	0	1
V4276A85	4	7	10	3	0	-1

Parker Hannifin Corporation
Engineered Polymer Systems Division
Phone: 801 972 3000

N4115A75

Grade	Suffix Requirements (Tests)											
	A14	A24	B14	B34	EA14	EF11	EF21	EO14	EO34	F16	F17	F19
2												
3												
4												
5												
6												
7												

ASTM Call-Out: Grade (BF, BG, BK, CH) 822 (Tests per Grade as shown above, such as A14 for grades 2-6)

N4180A80

Grade	Suffix Requirements (Tests)											
	A14	A24	B14	B34	EA14	EF11	EF21	EO14	EO34	F16	F17	F19
2												
3												
4												
5												
6												
7												

ASTM Call-Out: Grade (BF, BG, BK, CH) 820 (Tests per Grade as shown above, such as A14 for grades 2-6)

N4181AA80

Grade	Suffix Requirements (Tests)											
	A14	A24	B14	B34	EA14	EF11	EF21	EO14	EO34	F16	F17	F19
2					Volume							
3												
4								Not BK				
5												
6												
7												

ASTM Call-Out: Grade (BF, BG, BK, CH) 826 (Tests per Grade as shown above, such as A14 for grades 2-6)

N4121A90

Grade	Suffix Requirements (Tests)											
	A14	A24	B14	B34	EA14	EF11	EF21	EO14	EO34	F16	F17	F19
2												
3												
4												
5												
6												
7												

ASTM Call-Out: Grade (BF, BG, BK, CH) 9 (21 or less) (Tests per Grade as shown above, such as A14 for grades 2-6)

Key:

Passes | Not Tested | Fails | Not Required

09/01/07

Parker Hannifin Corporation
Engineered Polymer Systems Division
Phone: 801 972 3000

www.parkerseals.com

N4008A80

Grade	Suffix Requirements (Tests)											
	A14	A24	B14	B34	EA14	EF11	EF21	EO14	EO34	F16	F17	F19
2												
3												
4												
5												
6												
7												

ASTM Call-Out: Grade (BF, BG, BK, CH) 826 (Tests per Grade as shown above, such as A14 for grades 2-6)

N0304A75

Grade	Suffix Requirements (Tests)											
	A14	A24	B14	B34	EA14	EF11	EF21	EO14	EO34	F16	F17	F19
2												
3												
4												
5												
6												
7												

ASTM Call-Out: Grade (BF, BG, BK, CH) 8 (21 or less) (Tests per Grade as shown above, such as A14 for grades 2-6)

N4257A85

Grade	Suffix Requirements (Tests)											
	A14	A24	B14	B34	EA14	EF11	EF21	EO14	EO34	F16	F17	F19
2												
3												
4								BK Only				
5												
6												
7												

ASTM Call-Out: Grade (BF, BG, BK, CH) 830 (Tests per Grade as shown above, such as A14 for grades 2-6)

N4274A85

Grade	Suffix Requirements (Tests)											
	A14	A24	B14	B34	EA14	EF11	EF21	EO14	EO34	F16	F17	F19
2												
3												
4												
5												
6												
7												

ASTM Call-Out: Grade (BF, BG, BK, CH) 831 (Tests per Grade as shown above, such as A14 for grades 2-6)

Key:

Passes | Not Tested | Fails | Not Required

E

Parker Hannifin Corporation
Engineered Polymer Systems Division
Phone: 801 972 3000

N4263A90

Grade	Suffix Requirements (Tests)											
	A14	A24	B14	B34	EA14	EF11	EF21	EO14	EO34	F16	F17	F19
2												
3												
4												
5												
6												
7												

ASTM Call-Out: Grade (BF, BG, BK, CH) 932 (Tests per Grade as shown above, such as A14 for grades 2-6)

KB162A80

Grade	Suffix Requirements (Tests)											
	A14	A24	B14	B34	EA14	EF11	EF21	EO14	EO34	F16	F17	F19
2												
3												
4												
5												
6												
7												

ASTM Call-Out: Grade (BF, BG, BK, CH) 8 (21 or less) (Tests per Grade as shown above, such as A14 for grades 2-6)

KB163A90

Grade	Suffix Requirements (Tests)											
	A14	A24	B14	B34	EA14	EF11	EF21	EO14	EO34	F16	F17	F19
2												
3												
4												
5												
6												
7												

ASTM Call-Out: Grade (BF, BG, BK, CH) 8 (21 or less) (Tests per Grade as shown above, such as A14 for grades 2-6)

N4007A95

Grade	Suffix Requirements (Tests)											
	A14	A24	B14	B34	EA14	EF11	EF21	EO14	EO34	F16	F17	F19
2												
3												
4												
5												
6												
7												

ASTM Call-Out: Grade (BF, BG, BK, CH) 940 (Tests per Grade as shown above, such as A14 for grades 2-6)

Key:

Passes | Not Tested | Fails | Not Required

E

Parker Hannifin Corporation
Engineered Polymer Systems Division
Phone: 801 972 3000

V4205A75

Grade	Suffix Requirements (Tests)										
	A1-10	A1-11	B31	B37	B38	C12	C20	EF31	EO88	F15	F17
2											
3											
4											
5											
6											
7											

ASTM Call-Out: Grade HK 720 (Tests per Grade as shown above, such as A14 for grades 2-6)

V4208A90

Grade	Suffix Requirements (Tests)										
	A1-10	A1-11	B31	B37	B38	C12	C20	EF31	EO88	F15	F17
2											
3											
4											
5											
6											
7											

ASTM Call-Out: Grade HK 918 (Tests per Grade as shown above, such as A14 for grades 2-6)

V4266A95

Grade	Suffix Requirements (Tests)										
	A1-10	A1-11	B31	B37	B38	C12	C20	EF31	EO88	F15	F17
2											
3											
4											
5											
6											
7											

ASTM Call-Out: Grade HK 920 (Tests per Grade as shown above, such as A14 for grades 2-6)

E4183A80

Grade	Suffix Requirements (Tests)											
	A25	B44	B35	EA14	F17	F18	F19	G11	G21	K11	P2	R11
2												
3												
4												
5												
6												
7												
8												

ASTM Call-Out: Grade CA 822 (Tests per Grade as shown above, such as A14 for grades 2-6)

Key:

Passes — Not Tested — Fails — Not Required

Parker Hannifin Corporation
Engineered Polymer Systems Division
Phone: 801 972 3000

E4207A90

Grade	Suffix Requirements (Tests)											
	A25	B44	B35	EA14	F17	F18	F19	G11	G21	K11	P2	R11
2												
3												
4												
5												
6												
7												
8												

ASTM Call-Out: Grade CA 920 (Tests per Grade as shown above, such as A14 for grades 2-6)

E4259A80

Grade	Suffix Requirements (Tests)											
	A25	B44	B35	EA14	F17	F18	F19	G11	G21	K11	P2	R11
2												
3												
4												
5												
6												
7												
8												

ASTM Call-Out: Grade CA 822 (Tests per Grade as shown above, such as A14 for grades 2-6)

E4270A90

Grade	Suffix Requirements (Tests)											
	A25	B44	B35	EA14	F17	F18	F19	G11	G21	K11	P2	R11
2												
3												
4												
5												
6												
7												
8												

ASTM Call-Out: Grade CA 926 (Tests per Grade as shown above, such as A14 for grades 2-6)

Key:

Passes | Not Tested | Fails | Not Required

Parker Hannifin Corporation
Engineered Polymer Systems Division
Phone: 801 972 3000

Notes

Parker Hannifin Corporation
Engineered Polymer Systems Division
Phone: 801 972 3000

ISO Gland Tolerances

Metric Tolerances used for Seal Hardware (per ISO 286-2:1988)

Basic Size mm		H8	H9	H11	f7	f8	h8	h9	h10
Above	Up To and Including	mm							
-	3	+0.014 0	+0.025 0	+0.060 0	-0.006 -0.016	-0.006 -0.020	0 -0.014	0 -0.025	0 -0.040
3	6	+0.018 0	+0.030 0	+0.075 0	-0.010 -0.022	-0.010 -0.028	0 -0.018	0 -0.030	0 -0.048
6	10	+0.022 0	+0.036 0	+0.090 0	-0.013 -0.028	-0.013 -0.035	0 -0.022	0 -0.036	0 -0.058
10	18	+0.027 0	+0.043 0	+0.110 0	-0.016 -0.034	-0.016 -0.043	0 -0.027	0 -0.043	0 -0.070
18	30	+0.033 0	+0.052 0	+0.130 0	-0.020 -0.041	-0.020 -0.053	0 -0.033	0 -0.052	0 -0.084
30	50	+0.039 0	+0.062 0	+0.160 0	-0.025 -0.050	-0.025 -0.064	0 -0.039	0 -0.062	0 -0.100
50	80	+0.046 0	+0.074 0	+0.190 0	-0.030 -0.060	-0.030 -0.076	0 -0.046	0 -0.074	0 -0.120
80	120	+0.054 0	+0.087 0	+0.220 0	-0.036 -0.071	-0.036 -0.090	0 -0.054	0 -0.087	0 -0.140
120	180	+0.063 0	+.0100 0	+0.250 0	-0.043 -0.083	-0.043 -0.106	0 -0.063	0 -0.100	0 -0.160
180	250	+0.072 0	+0.115 0	+0.290 0	-0.050 -0.096	-0.050 -0.122	0 -0.072	0 -0.115	0 -0.185
250	315	+0.081 0	+0.130 0	+0.320 0	-0.056 -0.108	-0.056 -0.137	0 -0.081	0 -0.130	0 -0.210
315	400	+0.089 0	+0.140 0	+0.360 0	-0.062 -0.119	-0.062 -0.151	0 -0.089	0 -0.140	0 -0.230
400	500	+0.097 0	+0.155 0	+0.400 0	-0.068 -0.131	-0.068 -0.165	0 -0.097	0 -0.155	0 -0.250
500	630	+0.110 0	+0.175 0	+0.440 0	-0.076 -0.146	-0.076 -0.186	0 -0.110	0 -0.175	0 -0.280
630	800	+0.125 0	+0.200 0	+0.500 0	-0.080 -0.160	-0.080 -0.205	0 -0.125	0 -0.200	0 -0.320
800	1000	+0.140 0	+0.230 0	+0.560 0	-0.086 -0.176	-0.086 -0.226	0 -0.140	0 -0.230	0 -0.360
1000	1250	+0.165 0	+0.260 0	+0.660 0	-0.098 -0.203	-0.098 -0.263	0 -0.165	0 -0.260	0 -0.420
1250	1600	+0.195 0	+0.310 0	+0.780 0	-0.110 -0.235	-0.110 -0.305	0 -0.195	0 -0.310	0 -0.500
1600	2000	+0.230 0	+0.370 0	+0.920 0	-0.120 -0.270	-0.120 -0.350	0 -0.230	0 -0.370	0 -0.600
2000	2500	+0.280 0	+0.440 0	+1.100 0	-0.130 -0.305	-0.130 -0.410	0 -0.280	0 -0.440	0 -0.700
2500	3150	+0.330 0	+0.540 0	+1.350 0	-0.145 -0.355	-0.145 -0.475	0 -0.330	0 -0.540	0 -0.860

Parker Hannifin Corporation
Engineered Polymer Systems Division
Phone: 801 972 3000

Notes

Parker Hannifin Corporation
Engineered Polymer Systems Division
Phone: 801 972 3000

Other Parker EPS Products

Parker EPS Division designs and manufactures engineered elastomeric, polymeric and plastic seals and sealing systems for dynamic applications. EPS Division has a worldwide sealing network consisting of manufacturing locations in Utah, Texas, New York, Illinois and Baja, Mexico; and more than 200 distributor and service center locations in nine countries.

PTFE Lip Seals

Parker manufactures a wide range of PTFE lip seals to meet the unique temperature, chemical and low friction requirements of high-performance systems. FlexiSeal®, FlexiLip™ and FlexiCase™ lip seals are available in standard inch, metric and custom designs.

See: Catalog EPS 5340

Rotary Shaft Seals

Parker offers a complete line of rotary seal products including the proprietary Clipper® Oil Seal design with integrally molded rubber/fiber outer case and elastomeric inner lip. Varying profiles include factory split, MIST, single-lip, dual lip, excluder and molded-in spring. Parker Oil Seals are elastomer-lipped, metal retained rotary shaft seals available in a multitude of configurations.

See: Catalog EPS 5350

ProTech Bearing Isolators

ProTech bearing isolators are the ultimate in bearing protection with unitized, two-piece, non-contact design. ProTech provides zerio lubricant leakage and total exclusion of contaminants.

See: Catalog EPS 5275

Parker Hannifin Corporation
Engineered Polymer Systems Division
Phone: 801 972 3000

Offer of Sale

The items described in this document are hereby offered for sale at prices to be established by Parker Hannifin Corporation, its subsidiaries and its authorized distributors. This offer and its acceptance by any customer ("Buyer") shall be governed by all of the following Terms and Conditions. Buyer's order for any item described in this document, when communicated to Parker Hannifin Corporation, its subsidiary or any authorized distributor ("Seller") verbally or in writing, shall constitute acceptance of this offer.

1. Terms and Conditions of Sale: All descriptions, quotations, proposals, offers, acknowledgements, acceptances and sales of Seller's products are subject to and shall be governed exclusively by the terms and conditions stated herein. Buyer's acceptance of any offer to sell is limited to these terms and conditions. Any terms or conditions in addition to, or inconsistent with those stated herein, proposed by Buyer in any acceptance of an offer by Seller, are hereby objected to. No such additional, different or inconsistent terms and conditions shall become part of the contract between Buyer and Seller unless expressly accepted in writing by Seller. Seller's acceptance of any offer to purchase by Buyer is expressly conditional upon Buyer's assent to all the terms and conditions stated herein, including any terms in addition to, or inconsistent with those contained in Buyer's offer. Acceptance of Seller's products shall in all events constitute such assent.

2. Payment: Payment shall be made by Buyer net 30 days from the date of invoice of the items purchased hereunder. Seller reserves the right to charge interest on all past due amounts. Any claims by Buyer for omissions or shortages in a shipment shall be waived unless Seller receives notice thereof within 30 days after Buyer's receipt of the shipment.

3. Delivery: Unless otherwise provided in the face hereof, delivery shall be made F.O.B. Seller's plant. Regardless of the method of delivery, however, risk of loss shall pass to Buyer upon Seller's delivery to a carrier. Any delivery dates shown are approximate only and Seller shall have no liability for any delays in delivery.

4. Warranty: Seller warrants that the items sold hereunder shall be free from defects in material or workmanship at the time of delivery. THIS WARRANTY COMPRISES THE SOLE AND ENTIRE WARRANTY PERTAINING TO ITEMS PROVIDED HEREUNDER. SELLER MAKES NO OTHER WARRANTY, GUARANTEE, OR REPRESENTATION OF ANY KIND WHATSOEVER. ALL OTHER WARRANTIES, INCLUDING, BUT NOT LIMITED TO, MERCHANTIBILITY AND FITNESS FOR PURPOSE, WHETHER EXPRESS, IMPLIED OR ARISING BY OPERATION OF LAW, TRADE USAGE, OR COURSE OF DEALING ARE HEREBY DISCLAIMED.

NOTWITHSTANDING THE FOREGOING, THERE ARE NO WARRANTIES WHATSOEVER ON ITEMS BUILT OR ACQUIRED WHOLLY OR PARTIALLY, TO BUYER'S DESIGNS OR SPECIFICATIONS.

5. Limitation of Remedy: SELLER'S LIABILITY ARISING FROM OR IN ANY WAY CONNECTED WITH THE ITEMS SOLD OR THIS CONTRACT SHALL BE LIMITED EXCLUSIVELY TO REPAIR OR REPLACEMENT OF THE ITEMS SOLD OR REFUND OF THE PURCHASE PRICE PAID BY BUYER, AT SELLER'S SOLE OPTION. IN NO EVENT SHALL SELLER BE LIABLE FOR ANY INCIDENTAL, CONSEQUENTIAL OR SPECIAL DAMAGES OF ANY KIND OR NATURE WHATSOEVER, INCLUDING, BUT NOT LIMITED TO LOST PROFITS ARISING FROM OR IN ANY WAY CONNECTED WITH THIS AGREEMENT OR ITEMS SOLD HEREUNDER, WHETHER ALLEGED TO ARISE FROM BREACH OF CONTRACT, EXPRESS OR IMPLIED WARRANTY, OR IN TORT, INCLUDING WITHOUT LIMITATION, NEGLIGENCE, FAILURE TO WARN OR STRICT LIABILITY.

6. Changes, Reschedules and Cancellations: Buyer may request to modify the designs or specifications for the items sold hereunder as well as the quantities and delivery dates thereof, or may request to cancel all or part of this order, however, no such requested modification or cancellation shall become part of the contract between Buyer and Seller unless accepted by Seller in a written amendment to this Agreement. Acceptance of any such requested modification or cancellation shall be at Seller's discretion, and shall be upon such terms and conditions as Seller may require.

7. Special Tooling: A tooling charge may be imposed for any special tooling, including without limitation, dies, fixtures, molds and patterns, acquired to manufacture items sold pursuant to this contract. Such special tooling shall be and remain Seller's property notwithstanding payment of any charges by Buyer. In no event will Buyer acquire any interest in apparatus belonging to Seller which is utilized in the manufacture of the items sold hereunder, even if such apparatus has been specially converted or adapted for such manufacture and notwithstanding any charges paid by Buyer. Unless otherwise agreed, Seller shall have the right to alter, discard or otherwise dispose of any special tooling or other property in its sole discretion at any time.

8. Buyer's Property: Any designs, tools, patterns, materials, drawings, confidential information or equipment furnished by Buyer or any other items which become Buyer's property, may be considered obsolete and may be destroyed by Seller after two (2) consecutive years have elapsed without Buyer placing an order for the items which are manufactured using such property. Seller shall not be responsible for any loss or damage to such property while it is in Seller's possession or control.

9. Taxes: Unless otherwise indicated on the face hereof, all prices and charges are exclusive of excise, sales, use, property, occupational or like taxes which may be imposed by any taxing authority upon the manufacture, sale or delivery of the items sold hereunder. If any such taxes must be paid by Seller or if Seller is liable for the collection of such tax, the amount thereof shall be in addition to the amounts for the items sold. Buyer agrees to pay all such taxes or to reimburse Seller therefor upon receipt of its invoice. If Buyer claims exemption from any sales, use or other tax imposed by any taxing authority, Buyer shall save Seller harmless from and against any such tax, together with any interest or penalties thereon which may be assessed if the items are held to be taxable.

10. Indemnity for Infringement of Intellectual Property Rights: Seller shall have no liability for infringement of any patents, trademarks, copyrights, trade dress, trade secrets or similar rights except as provided in this Part 10. Seller will defend and indemnify Buyer against allegations of infringement of U.S. patents, U.S. trademarks, copyrights, trade dress and trade secrets (hereinafter "Intellectual Property Rights"). Seller will defend at its expense and will pay the cost of any settlement or damages awarded in an action brought against Buyer based on an allegation that an item sold pursuant to this contract infringes the Intellectual Property Rights of a third party. Seller's obligation to defend and indemnify Buyer is contingent on Buyer notifying Seller within ten (10) days after the Buyer becomes aware of such allegations of infringement, and Seller having sole control over the defense of any allegations or actions including all negotiations for settlement or compromise. If an item sold hereunder is subject to a claim that it infringes the Intellectual Property Rights of a third party, Seller may, at its sole expense and option, procure for Buyer the right to continue using said item, place or modify said item so as to make it noninfringing, or offer to accept return of said item and return the purchase price less a reasonable allowance for depreciation. Notwithstanding the foregoing, Seller shall have no liability for claims of infringement based on information provided by Buyer, or directed to items delivered hereunder for which the designs are specified in whole or part by Buyer, or infringements resulting from the modification, combination or use in a system of any item sold hereunder. The foregoing provisions of this Part 10 shall constitute Seller's sole and exclusive liability and Buyer's sole and exclusive remedy for infringement of Intellectual Property Rights. If a claim is based on information provided by Buyer or if the design for an item delivered hereunder is specified in whole or in part by Buyer, Buyer shall defend and indemnify Seller for all costs, expenses or judgements resulting from any claim that such item infringes any patent, trademark, copyright, trade dress, trade secret or any similar right.

11. Force Majeure: Seller does not assume the risk of and shall not be liable for delay or failure to perform any of Seller's obligations by reason of circumstances beyond the reasonable control of Seller (hereinafter "Events of Force Majeure"). Events of Force Majeure shall include without limitation, accidents, acts of God, strikes or labor disputes, acts, laws, rules or regulations of any government or government agency, fires, floods, delays or failures in delivery of carriers or suppliers, shortages of materials and any other cause beyond Seller's control.

12. Any special requirements for items to be provided by Seller hereunder including without limitation; compliance with military specifications, special documentation, or testing requirements, must be communicated to Seller in writing at the time the items are first requested. Any such requests that are communicated to Seller after preparation to manufacture an item has commenced may result in additional charges for rework or remanufacture of the item.

13. Entire Agreement/Governing Law: The terms and conditions set forth herein, together with any amendments, modifications and any different terms or conditions expressly accepted by Seller in writing, shall constitute the entire Agreement concerning the items sold, and there are no oral or other representations or agreements which pertain thereto. This Agreement shall be governed in all respects by the law of the State of Ohio. No actions arising out of the sale of the items sold hereunder or this Agreement may be brought by either more than two (2) years after the cause of action accrues.

09/01/07

Parker Hannifin Corporation
Engineered Polymer Systems Division
Phone: 801 972 3000

Worldwide Fluid Power Sealing

North America

EPS Division, Headquarters
Salt Lake City, Utah
phone 801 972 3000
fax 801 973 4019

EPS Division, Nacogdoches
Nacogdoches, Texas
phone 800-233-3900
fax 936 560 8998

EPS Division, Marion
Marion, New York
phone 315 926 4211
fax 315 926 4496

EPS Division, Chicago
Elgin, Illinois
phone 847 783 4300
fax 847 783 4311

EPS Division, Baja
Baja, Mexico
phone 619 671 3257

Asia Pacific

China
Parker Hannifin Motion & Control (Shanghai) Co., Ltd.
phone 86 21 2899 5181
fax 86 21 5834 8975

Europe

Germany
Parker Prädifa
phone 49 7142 351 0
fax 49 7142 351293

Denmark
Polar Seals ApS
phone 45 49 121700
fax 450490121701

Belgium
Parker Hannifin, Advanced Products, NV
phone 32 3 880 81 50
fax 32 3 888 48 62

EPS 5370 AP 5.0M 09/01/07

Parker Hannifin Corporation
Engineered Polymer Systems Division
2220 South 3600 West
Salt Lake City, UT 84119
phone 801 972 3000
fax 801 973 4019
www.parker.com

Your Local Authorized Parker Distributor